RSE

RAILWAY
SIGNAL
EQUIPMENT

RAILWAY SIGNAL EQUIPMENT

Union Switch & Signal

US&S RAILWAY SIGNAL EQUIPMENT CATALOG

INDEX OF NEW, REVISED AND OBSOLETED SECTIONS

SUPPLEMENT ISSUE NO. 26, JUNE, 1988

Enclosed are new and revised catalog sections for your RSE Catalog. The table below lists these by section number. Obsolete sections to be discarded (if any) from your present catalog are indicated at the lower right. Be sure to make all the indicated changes so that your catalog is up to date.

CATALOG SECTION	TYPE
Catalog Checklist	Revision of 1/87 issue.
Main Index	Revision of 1/87 issue.
RSE-2 (Contents)	Revision of 1/87 issue.
RSE-2B1	Revision of 8/82 issue. New 5" and 6" aluminum masts available.
RSE-2C2	Revision of 2/83 issue. Note cast iron construction. Detailed parts lists added.
RSE-2D1	Revision of 10/78 issue. Detailed parts lists added.
RSE-3A4	Revision of 8/82 issue. Detailed parts lists added.
RSE-3B1	Revision of 8/82 issue. Additional top part numbers.
RSE-3E3	Revision of 4/76 issue. Additional top part number. Detailed parts list added.
RSE-3E4	Revision of 5/85 issue. Additional top part numbers. Detailed parts list added.
RSE-4 (Contents)	Revision of 6/86 issue.
RSE-4D1	Revision of 7/84 issue. PN-152SO value corrected. Additional top part numbers.
RSE-4E1	Revision of 3/81 issue. Additional top part numbers.
RSE-4F1	Revision of 10/86 issue. CPM corrected for part nos. N322561-001, -801, and -804.
RSE-4G1	Revision of 6/86 issue. Cross references to old contact springs added.
RSE-4G2	New catalog section. Insert after RSE-4G1.
RSE-5 (Contents)	Revision of 9/82 issue.
RSE-5A2	Revision of 6/86 issue. Specifications revised for part numbers N231336 and N251714.
RSE-5F1	New catalog section. Insert after RSE-5E5.
RSE-8 (Contents)	Revision of 6/86 issue.
RSE-8G1	New catalog section. Insert after RSE-8F1.
RSE-8H2	Revision of 9/84 issue. Note new rail clamps, misc. part no. corrections, detailed parts list added.
RSE-8N1	New catalog section. Insert after RSE-8M1.
RSE-8N2	New catalog section. Insert after RSE-8N1.
RSE-9 (Contents)	Revision of 9/82 issue.
RSE-10 (Contents)	Revision of 6/86 issue.
RSE-10A2	Revision of 8/79 issue. Part no. corrections for 2-way flashing lights.
RSE-10B8	Revision of 8/80 issue. Motor overload protection now standard. Mechs. with non-vital relay.
RSE-10B11	New catalog section. Insert after RSE-10B10
RSE-11 (Contents)	Revision of 11/86 issue.
RSE-11B1	Revision of 6/86 issue. Part number revisions, procedure for expanding existing system.
RSE-11C1	Revision of 11/86 issue. PCB part number revisions.
RSE-11D1	Revision of 11/86 issue. PCB part number revisions. New Interpreter Unit.
RSE-11E1	New catalog section. Insert after RSE-11D1.
RSE-17 (Contents)	Revision of 9/82 issue.
RSE-17A1	Revision of 6/86 issue. Part number correction for AC Line Arrester.
RSE-17C1	New catalog section. Insert after RSE-17B1
RSE-17D1	New catalog section. Insert after RSE-17C1

OBSOLETE SECTIONS TO BE DISCARDED

RSE-8G1, SRD-5 Dragging Equipment Detector (Replaced by new section 8G1; see above).

RSE-11A1 (DDL-601A/B-X)

RSE-11B2 (SAM-II)

US&S RAILWAY SIGNAL EQUIPMENT CATALOG

INDEX OF NEW, REVISED AND OBSOLETED SECTIONS

SUPPLEMENT ISSUE NO. 25, JANUARY, 1987

Enclosed are new and revised catalog sections for your RSE Catalog. The table below lists these by section number. Obsolete sections to be discarded (if any) from your present catalog are indicated on the separate tabulation. Be sure to make all the indicated changes so that your catalog is up to date.

CATALOG SECTION	TYPE
Catalog Checklist	Revision of 06/86 issue
Main Index	Revision of 06/86 issue
RSE-2 (Contents)	Revision of 09/82 issue
RSE-2C3	Revision of 03/77 issue.
RSE-2D4	New section. Insert after RSE-2D3.
RSE-2D5	New section. Insert after RSE-2D4.
RSE-2E1	New section. Insert after RSE-2D5.
RSE-2E2	New section. Insert after RSE-2E1. Note: This catalog replaces RSE's 2E2 through 2E6, which were issued 12/85 but not distributed as part of a supplement package.
RSE-3A1	Revision of 02/84 issue.
RSE-4A4	Revision of 07/84 issue.
RSE-4F1	Revision of 03/81 issue.
RSE-4F3	Revision of 07/84 issue.
RSE-7C3	New section. Insert after RSE-7C2.
RSE-8D2	Revision of 03/83 issue.
RSE-8D4	Revision of 04/76 issue.
RSE-8D5	Revision of 01/77 issue.
RSE-10A1	Revision of 03/84 issue.
RSE-10B4	Revision of 08/79 issue.
RSE-11 (Contents)	Revision of 06/86 issue.
RSE-11A1	Revision of 02/83 issue.
RSE-11C1	Revision of 04/84 issue.
RSE-11D1	Revision of 03/84 issue.

CATALOG SECTION	TYPE
RSE-14A4	Revision of 03/83 issue.
RSE-17 (Contents)	Revision of 09/82 issue.

OBSOLETE SECTIONS TO BE DISCARDED

RSE-8J1	
RSE-9C3	
RSE-11B2	(DDL-601B/X information put in RSE-11A2)
RSE-15A1	Changed to Bulletin 416.

US&S RAILWAY SIGNAL EQUIPMENT CATALOG

CATALOG CHECKLIST

SUPPLEMENT ISSUE NO. 26, JUNE, 1988

Once you have updated your catalog with this supplement, your blue binder should contain all of the sections listed in the table below. Check this table to make sure your catalog is complete and up to date. Missing or out-of-date sections may be replaced by writing to US&S Technical Publications, PO. Box 420, Pittsburgh PA, 15230, or calling 1-800-351-1520. Note: Main catalog sections RSE-12 and RSE-16 are intentionally omitted. These covered products or systems no longer available from US&S.

CATALOG SECTION	ORIG. ISSUE DATE	LATEST ISSUE DATE	ISSUED SUPP. #
Cat. Checklist	--	06/88	26
Main Index	04/76	06/88	26
RSE-1 Contents	02/70	09/82	19
RSE-1A1	02/70	10/79	15
RSE-1B1	02/70	08/84	22
RSE-2 Contents	03/80	02/88	26
RSE-2B1	06/77	02/88	26
RSE-2B2	06/77	06/86	24
RSE-2C1	03/77	08/82	19
RSE-2C2	03/77	02/88	26
RSE-2C3	03/77	01/87	25
RSE-2D1	10/78	02/88	26
RSE-2D2	03/73	08/82	19
RSE-2D3	10/76	08/82	19
RSE-2D4	01/87	--	25
RSE-2D5	01/87	--	25
RSE-2E1	01/87	--	25
RSE-2E2	01/87	--	25
RSE-2F1	10/76	06/86	24
RSE-3 Contents	10/72	09/82	19
RSE-3A1	10/72	10/86	25
RSE-3A2	10/72	08/82	19
RSE-3A4	10/72	02/88	26
RSE-3B1	10/72	06/88	26
RSE-3B2	08/82	09/84	22
RSE-3B4	10/72	08/82	19
RSE-3C1	10/72	08/82	19
RSE-3D1	06/70	06/86	24
RSE-3D2	10/72	--	2
RSE-3D3	10/72	02/75	6
RSE-3D4	10/72	06/86	24
RSE-3D5	10/72	02/83	20
RSE-3D6	04/76	05/85	23
RSE-3E1	06/70	04/76	8
RSE-3E2	02/74	10/78	13
RSE-3E3	04/76	05/88	26
RSE-3E4	04/76	03/88	26
RSE-3E5	04/76	06/86	24
RSE-4 Contents	04/70	05/88	26
RSE-4 Gen. Info	04/70	06/86	24
RSE-4A1	04/70	06/86	24
RSE-4A2	04/70	07/84	22
RSE-4A3	04/70	07/84	22
RSE-4A4	03/81	10/86	25

CATALOG SECTION	ORIG. ISSUE DATE	LATEST ISSUE DATE	ISSUED SUPP. #
RSE-4A5	03/81	07/84	22
RSE-4B1	04/70	07/84	22
RSE-4C1	04/70	05/85	23
RSE-4D1	04/70	03/88	26
RSE-4D2	07/70	03/81	17
RSE-4E1	04/70	03/88	26
RSE-4E2	04/70	03/81	17
RSE-4E3	03/81	02/84	21
RSE-4F1	04/70	5/88	26
RSE-4F2	03/81	--	17
RSE-4F3	03/81	10/86	25
RSE-4F4	03/81	03/83	20
RSE-4F5	06/82	06/86	24
RSE-4F6	10/82	02/83	20
RSE-4G1	09/82	04/88	26
RSE-4G2	04/88	--	26
RSE-5 Contents	04/70	05/88	26
RSE Gen. Info.	04/70	05/81	18
RSE-5A1	04/70	05/81	18
RSE-5A2	04/70	05/88	26
RSE-5A3	05/81	07/84	22
RSE-5A4	04/70	05/81	18
RSE-5A5	04/70	05/81	18
RSE-5B1	04/70	05/81	18
RSE-5B2	04/70	05/81	18
RSE-5B3	04/70	05/81	18
RSE-5C1	04/70	05/81	18
RSE-5C2	05/81	--	18
RSE-5D1	04/70	05/81	18
RSE-5D2	04/70	05/81	18
RSE-5E1	04/70	05/81	18
RSE-5E2	05/81	--	18
RSE-5E3	05/81	--	18
RSE-5E4	05/81	--	18
RSE-5E5	05/81	--	18
RSE-5F1	05/88	--	26
RSE-6 Contents	04/70	09/82	19
RSE-6A1	04/70	03/81	17
RSE-6B1	04/70	04/81	17
RSE-6C1	02/75	03/81	17
RSE-7 Contents	10/72	06/86	24
RSE-7A0	06/80	02/83	20
RSE-7A1	10/72	02/83	20
RSE-7A2	10/72	02/83	20
RSE-7B1	10/72	--	2

CATALOG SECTION	ORIG. ISSUE DATE	LATEST ISSUE DATE	ISSUED SUPP. #
RSE-7C1	01/79	02/83	20
RSE-7C2	03/80	06/86	24
RSE-7C3	01/87	--	25
RSE-7D0	04/76	06/82	19
RSE-7D1	02/75	06/82	19
RSE-7D2	09/75	06/86	24
RSE-7E1	02/83	--	20
RSE-8 Contents	09/75	05/88	26
RSE-8C1	01/78	--	11
RSE-8D1	07/73	06/86	24
RSE-8D2	07/75	01/87	25
RSE-8D3	09/75	10/79	15
RSE-8D4	04/76	01/87	25
RSE-8D5	01/77	12/86	25
RSE-8E1	02/75	06/78	12
RSE-8E2	03/83	--	20
RSE-8F1	02/75	--	6
RSE-8G1	05/88	--	26
RSE-8H1	10/72	--	2
RSE-8H2	09/84	05/88	26
RSE-8J2	04/76	10/79	15
RSE-8K2	10/78	--	13
RSE-8M1	08/78	05/85	23
RSE-8N1	05/88	--	26
RSE-8N2	05/88	--	26
RSE-9 Contents	06/69	05/88	26
RSE-9A1	06/69	03/81	19
RSE-9B1	06/69	06/86	24
RSE-9C1	06/69	01/78	11
RSE-9C2	06/69	08/79	14
RSE-9C4	06/69	--	1
RSE-9D1	06/69	09/75	7
RSE-10 Content	08/79	05/88	26
RSE-10A1	08/79	10/86	25
RSE-10A2	08/79	06/88	26
RSE-10A3	08/79	--	14
RSE-10A4	08/79	08/80	16
RSE-10B1	08/79	06/86	24
RSE-10B2	08/79	08/80	16
RSE-10B3	08/79	08/80	16
RSE-10B4	08/79	10/86	25
RSE-10B5	08/79	04/84	21
RSE-10B6	08/79	03/84	21
RSE-10B7	08/79	06/86	24
RSE-10B8	08/79	06/88	26
RSE-10B9	08/79	06/86	24
RSE-10B10	08/79	--	14
RSE-10B11	05/88	--	26
RSE-10F1	09/80	--	16
RSE-11 Content	09/82	06/88	26
RSE-11B1	03/84	06/88	26
RSE-11C1	04/84	06/88	26
RSE-11D1	03/84	06/88	26
RSE-11E1	06/88	--	26
RSE-13 Content	09/76	09/82	19
RSE-13A1	09/76	08/78	19

CATALOG SECTION	ORIG. ISSUE DATE	LATEST ISSUE DATE	ISSUED SUPP. #
RSE-14 Content	10/72	06/86	24
RSE-14A1	03/73	--	3
RSE-14A2	03/73	--	3
RSE-14A3	03/73	--	3
RSE-14A4	03/83	12/86	25
RSE-14B1	10/72	05/80	2
RSE-14B2	10/72	--	2
RSE-14C1	10/72	--	2
RSE-14D1	06/73	05/80	3
RSE-14D2	06/73	05/80	3
RSE-14D3	03/81	--	17
RSE-14D4	02/84	--	21
RSE-14E1	10/72	--	22
RSE-14F1	09/75	06/86	24
RSE-15 Content	04/76	09/82	19
RSE-15A2	04/76	--	8
RSE-15A3	04/76	--	8
RSE-15A4	04/76	--	8
RSE-15A5	09/75	10/79	15
RSE-15A6	04/76	--	8
RSE-15A7	04/76	04/80	16
RSE-15A8	04/76	--	8
RSE-15B1	01/78	03/83	20
RSE-15D1	09/75	--	7
RSE-15E1	06/82	--	19
RSE-15E2	06/82	--	19
RSE-15E3	06/82	--	19
RSE-17 Content	04/76	06/88	26
RSE-17A1	08/78	06/88	26
RSE-17A2	12/79	03/83	20
RSE-17B1	08/79	--	14
RSE-17C1	06/88	--	26
RSE-17D1	06/88	--	26
RSE-18 Content	09/82	--	7
RSE-18A1	09/75	--	7

US&S RAILWAY SIGNAL EQUIPMENT CATALOG

CATALOG CHECKLIST

SUPPLEMENT ISSUE NO. 25, JANUARY, 1987

Once you have updated your catalog with this supplement, your blue binder should contain all of the sections listed in the table below. Check this table to make sure your catalog is complete and up-to-date. Missing or out-of-date sections may be replaced by writing to US&S Technical Publications, PO. Box 420, Pittsburgh PA, 15230, or calling 1-800-351-1520. Note: Main catalog sections RSE-12 and RSE-16 are intentionally omitted. These covered products or systems no longer available from US&S.

CATALOG SECTION	ORIG. ISSUE DATE	LATEST ISSUE DATE	ISSUED SUPP. #
Cat. Checklist	--	01/87	25
Main Index	04/76	01/87	25
RSE-1 Contents	02/70	09/82	19
RSE-1A1	02/70	10/79	15
RSE-1B1	02/70	08/84	22
RSE-2 Contents	03/80	01/87	25
RSE-2B1	06/77	08/82	19
RSE-2B2	06/77	06/86	24
RSE-2C1	03/77	08/82	19
RSE-2C2	03/77	02/83	20
RSE-2C3	03/77	01/87	25
RSE-2D1	10/78	--	13
RSE-2D2	03/73	08/82	19
RSE-2D3	10/76	08/82	19
RSE-2D4	01/87	--	25
RSE-2D5	01/87	--	25
RSE-2E1	01/87	--	25
RSE-2E2	01/87	--	25
RSE-2F1	10/76	06/86	24
RSE-3 Contents	10/72	09/82	19
RSE-3A1	10/72	10/86	25
RSE-3A2	10/72	08/82	19
RSE-3A4	10/72	08/82	19
RSE-3B1	10/72	08/82	19
RSE-3B2	08/82	09/84	22
RSE-3B4	10/72	08/82	19
RSE-3C1	10/72	08/82	19
RSE-3D1	06/70	06/86	24
RSE-3D2	10/72	--	2
RSE-3D3	10/72	02/75	6
RSE-3D4	10/72	06/86	24
RSE-3D5	10/72	02/83	20
RSE-3D6	04/76	05/85	23
RSE-3E1	06/70	04/76	8
RSE-3E2	02/74	10/78	13
RSE-3E3	04/76	--	8
RSE-3E4	04/76	05/85	23
RSE-3E5	04/76	06/86	24
RSE-4 Contents	04/70	06/86	24
RSE-4 Gen. Info	04/70	06/86	24
RSE-4A1	04/70	06/86	24
RSE-4A2	04/70	07/84	22
RSE-4A3	04/70	07/84	22
RSE-4A4	03/81	10/86	25

CATALOG SECTION	ORIG. ISSUE DATE	LATEST ISSUE DATE	ISSUED SUPP. #
RSE-4A5	03/81	07/84	22
RSE-4B1	04/70	07/84	22
RSE-4C1	04/70	05/85	23
RSE-4D1	04/70	07/84	22
RSE-4D2	07/70	03/81	17
RSE-4E1	04/70	03/81	17
RSE-4E2	04/70	03/81	17
RSE-4E3	03/81	02/84	21
RSE-4F1	04/70	10/86	25
RSE-4F2	03/81	--	17
RSE-4F3	03/81	10/86	25
RSE-4F4	03/81	03/83	20
RSE-4F5	06/82	06/86	24
RSE-4F6	10/82	02/83	20
RSE-4G1	09/82	06/86	24
RSE-5 Contents	04/70	09/82	19
RSE Gen. Info.	04/70	05/81	18
RSE-5A1	04/70	05/81	18
RSE-5A2	04/70	06/86	24
RSE-5A3	05/81	07/84	22
RSE-5A4	04/70	05/81	18
RSE-5A5	04/70	05/81	18
RSE-5B1	04/70	05/81	18
RSE-5B2	04/70	05/81	18
RSE-5B3	04/70	05/81	18
RSE-5C1	04/70	05/81	18
RSE-5C2	05/81	--	18
RSE-5D1	04/70	05/81	18
RSE-5D2	04/70	05/81	18
RSE-5E1	04/70	05/81	18
RSE-5E2	05/81	--	18
RSE-5E3	05/81	--	18
RSE-5E4	05/81	--	18
RSE-5E5	05/81	--	18
RSE-6 Contents	04/70	09/82	19
RSE-6A1	04/70	03/81	17
RSE-6B1	04/70	04/81	17
RSE-6C1	02/75	03/81	17
RSE-7 Contents	10/72	06/86	24
RSE-7A0	06/80	02/83	20
RSE-7A1	10/72	02/83	20
RSE-7A2	10/72	02/83	20
RSE-7B1	10/72	--	2
RSE-7C1	01/79	02/83	20
RSE-7C2	03/80	06/86	24

CATALOG SECTION	ORIG. ISSUE DATE	LATEST ISSUE DATE	ISSUED SUPP. #
RSE-7C3	01/87	--	25
RSE-7D0	04/76	06/82	19
RSE-7D1	02/75	06/82	19
RSE-7D2	09/75	06/86	24
RSE-7E1	02/83	--	20
RSE-8 Contents	09/75	06/86	24
RSE-8C1	01/78	--	11
RSE-8D1	07/73	06/86	24
RSE-8D2	07/75	01/87	25
RSE-8D3	09/75	10/79	15
RSE-8D4	04/76	01/87	25
RSE-8D5	01/77	12/86	25
RSE-8E1	02/75	06/78	12
RSE-8E2	03/83	--	20
RSE-8F1	02/75	--	6
RSE-8G1	06/70	06/86	24
RSE-8H1	10/72	--	2
RSE-8H2	09/84	--	22
RSE-8J2	04/76	10/79	15
RSE-8K2	10/78	--	13
RSE-8M1	08/78	05/85	23
RSE-9 Contents	06/69	09/82	19
RSE-9A1	06/69	03/81	19
RSE-9B1	06/69	06/86	24
RSE-9C1	06/69	01/78	11
RSE-9C2	06/69	08/79	14
RSE-9C4	06/69	--	1
RSE-9D1	06/69	09/75	7
RSE-10 Content	08/79	06/86	24
RSE-10A1	08/79	10/86	25
RSE-10A2	08/79	--	14
RSE-10A3	08/79	--	14
RSE-10A4	08/79	08/80	16
RSE-10B1	08/79	06/86	24
RSE-10B2	08/79	08/80	16
RSE-10B3	08/79	08/80	16
RSE-10B4	08/79	10/86	25
RSE-10B5	08/79	04/84	21
RSE-10B6	08/79	03/84	21
RSE-10B7	08/79	06/86	24
RSE-10B8	08/79	08/80	16
RSE-10B9	08/79	06/86	24
RSE-10B10	08/79	--	14
RSE-10F1	09/80	--	16
RSE-11 Content	09/82	11/86	25
RSE-11A1	03/81	11/86	25
RSE-11B1	03/84	06/86	24
RSE-11B2	03/84	--	21
RSE-11C1	04/84	11/86	25
RSE-11D1	03/84	11/86	25
RSE-13 Content	09/76	09/82	19
RSE-13A1	09/76	08/78	19

CATALOG SECTION	ORIG. ISSUE DATE	LATEST ISSUE DATE	ISSUED SUPP. #
RSE-14 Content	10/72	06/86	24
RSE-14A1	03/73	--	3
RSE-14A2	03/73	--	3
RSE-14A3	03/73	--	3
RSE-14A4	03/83	12/86	25
RSE-14B1	10/72	05/80	2
RSE-14B2	10/72	--	2
RSE-14C1	10/72	--	2
RSE-14D1	06/73	05/80	3
RSE-14D2	06/73	05/80	3
RSE-14D3	03/81	--	17
RSE-14D4	02/84	--	21
RSE-14E1	10/72	--	22
RSE-14F1	09/75	06/86	24
RSE-15 Content	04/76	09/82	19
RSE-15A2	04/76	--	8
RSE-15A3	04/76	--	8
RSE-15A4	04/76	--	8
RSE-15A5	09/75	10/79	15
RSE-15A6	04/76	--	8
RSE-15A7	04/76	04/80	16
RSE-15A8	04/76	--	8
RSE-15B1	01/78	03/83	20
RSE-15D1	09/75	--	7
RSE-15E1	06/82	--	19
RSE-15E2	06/82	--	19
RSE-15E3	06/82	--	19
RSE-17 Content	04/76	12/86	25
RSE-17A1	08/78	06/86	24
RSE-17A2	12/79	03/83	20
RSE-17B1	08/79	--	14
RSE-18 Content	09/82	--	7
RSE-18A1	09/75	--	7

US&S RAILWAY SIGNAL EQUIPMENT CATALOG

INDEX

A

A-5 Electro-Pneumatic Switch Machine 3A2
A-10 Electro-Pneumatic Switch Machine 3C1
ACCUTECT Wheel Detector 8H2
Adjustable Resistors 17D1
AF Audio Frequency Transit Track Track Circuit System 8D5
AFO-I Audio Frequency Overlay Track Circuit 8D1
AFO-IIC Audio Frequency Overlay Track Circuit 8D1
Air Cooled Transformers
W-400 7D1
W-800 7D2
Air Compressors 3D6
Arresters, Lightning 17A1
Aspect Indicator, Cab Signal 15A4
ATT-20 Audio Track Transceiver 8D2
Audio Freq. Overlay Track Circuits
AFO-IIC 8D1
ATT-20 8D3
Audio Frequency Transit Track Circuit System 8D5
Audio Track Transceiver ATT-20 8D2
Automatic Train Stop (Cab Signal) 15B1
AVI (Automatic Vehicle Identification System) 13A1
AW-10 Area Warning Device 8E2
Axle Generator (Cab Signal) 15A8

B

BA-10 Grade Crossing Bell 10B4
Backgrounds
Grade Crossing Signal 10B7
HC-33 Marker Light Sig. 2D5
MCL-100 Color Light Signal 2D2
MCL-101 Marker Light Sig. 2D3
Searchlight Dwarf Signals 2C1
Searchlight Signal 2D1
Bases, Junction Box 9C2
Bases, Plug-In Relay
GRS/Safetran Compatible for PN-150 Relays 4G2
PN-150 and PN-250 Relay 4G1
Battery Chargers 7E1
Bearing Assemblies, Roller (Switches) 3E3
Bells, Grade Crossing 10B4
Blocking Reactors (Audio Frequency Overlay) 8D1
Blocking Unit - MICROCODE 8G1
Blocks, Terminal 17D1
Bonds, Impedance and Mini 8M1
Bootleg 9C4
Brackets, Relay Shelf Mount 5F1
Bulbs (See Lamps and Bulbs)

C

C Type Track Circuits 8C1
Cab Aspect Indicator 15A4
Cab Signal Equipment, EL (See EL Cab Signal)
Cab Signal Relays (See Plug-In Relays)
Cantilever Assy., Grade Crossing 10A4
Capacitors, MICROLOK Appl. 11E1
Caps, Terminal, Insulated Molded 17D1
Cases, Searchlight Signal 2D1
Cases, Equipment 9B1
CCR Series Rectifiers 7A1
CD Relay 5D2
CDP Relay 5D2
Chargers, Battery 7E1
Code Generator 8K2
Code Reset Module, TRU-II 8G1
Coil, AVI Wayside 13A1
Color Light Signals
N-2 Dwarf 2C2
Modular 2D2
R-2 2D4
Transit, Assemblies 2E1
Transit, Units 2E2
Computer, PC
GENISYS Dev. System 11C1
MICROLOK Dev. System 11E1
Connecting Rods (Switch Machine) 3E5
Connector/Cable Assemblies
EVENTTRAK 11D1
GENISYS 11C1
MICROLOK 11E1
Constant Current Rectifiers 7A1
Constant Potential Rectifiers 7A2
Converters
DC/AC 7C1
DC/DC 7B1
DC/DC (Cab Signal) 15A5
Coupling Units (Audio Frequency Overlay) 8D1
Covers, Electro-Pneumatic Switch Machine 3B1
CP Switch Valve 3D2
CPR Series Rectifiers 7A2
Crimp Pins and Tools, MICROLOK Application 11E1
CS-II Equipment Cases 9B1
CVF Series Battery Chargers 7E1

D

DA-10 Electro-Pneumatic Switch Machine 3B1
DC/AC Converter 7C1
DC/AC Inverter 7C2
DC/DC Converter 7B1
Decoder Logic Unit, AVI 13A1
Detectors, Wheel
WD-30, WD-30D 8H1
ACCUTECT 8H2
Development System
GENISYS 11C1
MICROLOK 11E1
Diodes, MICROLOK Application 11E1
Directional Area Warning Device 8E2

D

Diskettes, Software
GENISYS 11C1
MICROLOK 11E1
DM Relay 5D1
DN-11 Relay (DC Line, Neutral) 5A2
DN-11 Relay (DC Track, Neutral) 5A2
DN-11 Relay (Slow DA/PU) 5A2
DN-11B Relay (DC Line, Biased) 5A1
DN-11B Relay (DC Track, Biased) 5B1
DN-11C Relay 5A1
DN-11P Relay 5E4
DN-18 Relay 5A3
DN-18C Relay 5D2
DN-19 Relay 5A3
DN-19A Relay 5A3
DN-22 Relay 5B2
DN-22A Relay (Neutral) 5A2
DN-22A Relay (Slow DA/PU) 5A2
DN-22B Relay (DC Line, Biased) 5A1
DN-22B Relay (DC Track, Biased) 5B1
DN-22BH Relay 5B1
DN-22C Relay 5D2
DN-22L Relay 5E3
DN-22P Relay 5E4
DNL-4 Relay 5E5
DP-14 Relay (DC Line, Polarized) 5A5
DP-14 Relay (DC Track, Polarized) 5B3
DP-21 Relay 5A5
DP-25 Relay 5A4
Doppler Radar Unit DR-50 14F1
DT-10 Relay 5E2
Dwarf Signals
Searchlight 2C1
Color Light 2C2

E

E-Z Vue Lightning Arresters 17A1
EC-10 Electrocoder Code Generator 8K2
EL Cab Signal
Equipment Box 15A2
Equipment Box w/Overspeed 15A3
Electric Switch Locks
SL-6A 3D3
SL-21A 3D4
SL-25, SL-26 3D5
Electric Switch Machines
M3, M-23A, M23B 3A1
YM-4 3B2
Electric Switch Signal, ES-20 2C3
Electro-Pneumatic Car Retarders
Model 67 14A1
Model 81 14A4
Electro-Pneumatic Switch Machines
A-5 3A2
YM-4 3B2
NA-15 3B4
A-10 3C1
EM-1 Automatic Train Stop 15B1
EPROM Programmers, Erasers
GENISYS 11C1
MICROLOK 11E1
Equipment Cases 9B1
Equipment Houses 9A1

E

Equipment Racks
- MICROLOK 11E1
- "Mini" (TRU-II) 8N1

ES-20 Color Light Electric Switch Signals 2C3
Event Recorder, EVENTTRAK 11D1
Exhaust Valve, Retarder 14B2
Extender PCB, MICROLOK 11E1
Extension Unit, FCE-500 11B1

F

F-40M DC/DC Converter 7B1
F-42 DC/DC Converter 15A5
F-81 DC/AC Inverter 7C1
F-85 Inverter-Driver 7C3
FCE-500 Field Code Emulator 11B1
Five (5) Second Timer 17C1
Flashing Light Assembly (Grade Crossing) 10B2
FL-28 Relay 5E1
FN-16A Relay 5E1
FN-27 Relay 5E1
Foundations
- Cast Iron 9D1
- Equipment House 9D1
- Equipment Case 9B1
- Grade Xing Signal & Cantil. 10F1
- Radar Unit 14F1
- Switch Machine Valve 3D2

FR-III Shunt Track Circuit 8F1

G

Gate Arms, Aluminum and Fiberglass 10B9
Gate Mechanism, Model 75 (Grade Crossing) 10B8
General-Purpose Relays
- KP 6A1
- L-Series 6C1
- LP-100 6B1

GENISYS Non-Vital Logic Emulator 11C1
Grade Crossing Assemblies
- Cantilever 10A4
- Flashing Light Signal 10A1
- Flashing Light Signal with Model 75 Crossing Gate 10A2
- Gate Assembly with Stub Mast 10A3

Grade Crossing Components
- Bell 10B4
- Crossing Signs 10B3
- Flashing Light 10B5
- Gate Arms, Aluminum and Fiberglass 10B9
- Gate Arm Adapter Brackets 10B10
- Gate Mechanism, Model 75 10B8
- Illuminated Signs 10B11
- Junction Box Bases 10B2
- Junction Box Cross Arms 10B6
- Signal and Cantilever Foundations 10F1
- Signal Light Units 10B7
- Signal Masts 10B1

GRS/Safetran-Compatible Relay Base for PN-150 Relays 4G2

H

H-2 Searchlight Dwarf Signal 2C1
H-2 Searchlight Signal Units 2D1
Handrails, Mainline Signal Assy.
- Mainline Search/Marker Sig. 2B1
- Mainline Color/Marker Sig. 2B2

Hand Skates (Class Yard) 14C1
HC-10 Illuminated Sign 10B11
HC-33 Marker Light Signal 2D5
HC-100 Signal Light Units 10B7
HC-120A Signal Light Units 10B7
Hevi Car Kit for Models 31 and 32 Car Retarders 14D1
HM-II Equipment Houses 9A1
Hoods
- Grade Crossing Signal 10B7
- Lens, Modular Color Light Signal 2D2
- Lens, MCL-101 Marker Light 2D3
- Lens, HC-33 Marker Light 2D5
- Lens, Transit Color Light 2E2

Houses, Equipment 9A1
HS-2 Retarder Control Valve 14B1
Hydraulic Piston Accumulator (Retarder) 14D3

I

Illuminated Sign, HC-10 10B11
Inclined Cover Glass Assembly and Phankill Unit 2F1
Insulated Molded Caps (Terminal) 17D1
Interlocking Control System, MICROLOK 11E1
Interpreter Unit, EVENTTRAK 11D1
Interrogator, AVI 13A1
Introduction (To Catalog) 1A1
Inverter, DC/AC 7C2
Inverter-Driver, F-85 7C3
Impedance Bonds 8M1

J

Junction Boxes
- Bases 9C2
- Bases for 4" and 5" Grade Crossing Masts 10B2
- Pedestal-Mounted 9C1
- Pipe-Mounted 9C3
- Transit Signal 2E1

Junction Box Crossarms (Grade Crossing) 10B6

K

KP Relays 6A1
K-10, K-40 Multiple Terminal Blocks 17D1

L

L Series Relays 6C1
Ladders
- Mainline Search/Marker Sig. 2B1
- Mainlines Color/Marker Sig. 2B2
- Transit Signal 2E1

Lamps and Bulbs
- Equipment House Call Light 9A1

Lamps and Bulbs (Cont'd)
- Grade Crossing Signal Light Unit 10B7
- Signal Light Applications 17B1
- Transit Signals 2E2

Lamp Receptacle, N-2 Dwarf 2C2
Lenses
- Modular Color Light Signal 2D2
- Marker Light Signal 2D3
- N-2 Dwarf 2C2
- Transit Signal 2E2

Light Modules and Units
- Grade Crossing Signal 10B7
- Modular Color Light Signal 2D2
- Marker Light Signal 2D3

Lightning Arresters 17A1
Locomotive Pick-Up Coils 15A6
LP-100 Relays 6B1

M

M-3 Electric Switch Machine 3A1
M-23A Electric Switch Machine 3A1
M-23B Electric Switch Machine 3A1
Mainline Signal Assemblies
- Color Light and Marker Light Signal Units 2B2
- Searchlight and Marker Light Signal Units 2B1

Marker Light Signals
- MCL-101 2D3
- HC-33 2D5

Masts
- Grade Crossing Signal 10B1
- Mainline Search/Marker Sig. 2B1
- Mainline Color/Marker Sig. 2B2
- Transit Signal 2E1

MCL-100 Modular Color Lights 2D2
MCL-101 Marker Lights 2D3
MICROCODE-I, MICROCODE-II 8G1
MICROLOK 11E1
Mini-Bonds 8M1
Mini-Care Cylinder Replacement Kit for Retarders 14D4
Mini-Racks, Equipment (TRU-II) 8N1
Model 50-A Electro-Pneumatic Car Retarder 14A2
Model 50-B Car Retarder 14A3
Model 67 Electro-Pneumatic Car Retarder 14A1
Model 75 Gate Mechanism 10B8
Model 81 Electro-Pneumatic Car Retarder 14A4
Monitor Unit, EVENTTRAK 11D1
Motor, for Switch Machine 3A1
Mounting Bases, Relay
- PN-150 and PN-250 4G1
- GRS/Safetran-Compatible 4G2

N

NA-15 Electro-Pneumatic Switch Machine 3B4
N-2 Color Light Dwarf Signal 2C2
Non-Vital Logic Emulator (GENISYS) 11C1
Non-Vital Relays (See Plug-In Relays, Shelf Relays, General Purpose Relays)
Number Plate, Transit Signal 2E2

O

Operating Rods, Switch Circuit Controller
- Standard 3E1
- Rubber-Mounted 3E2

OR-10 Relay 5C1
OR-11 Relay 5C1
OR-20 Relay 5C2

P

P-4 Relay 5D2
PA-150 SO Relay 4D2
PC (Personal Computer)
- GENISYS Dev. System 11C1
- MICROLOK Dev. System 11E1

PC-250B Relay 4E3
PC-250BAE Relay 4E3
PC-250BE Relay 4E3
PC-250P Relay 4E3
PC-250TR Relay 4E1
PF-256 Relay 4F1
PL-59 Relay 15E3
PM-10 Presence Monitor 8J2
PN-59 Relay 15E1
PN-150B Relay 4A1
PN-150BC Relay 4E3
PN-150BD Relay 4A1
PN-150BE Relay 4E3
PN-150BH Relay 4B1
PN-150BM Relay 4A5
PN-150BL Relay 4F3
PN-150BQS Relay 4B1
PN-150BSR Relay 4A3
PN-150BTR Relay 4B1
PN-150HD Relay 4A1
PN-150N Relay 4A2
PN-150NE Relay 4E3
PN-150SO Relay 4D1
PN-150P Relay 4F4
PN-152SO Relay 4D1
PN-150T Relay 4F6
PN-159B Relay 15E2
PN-250B Relay 4A1
PN-250BE Relay 4E3
PN-258B Relay 4A3
PN-258BC Relay 4E2
PN-258BSR Relay 4A3
PN-259BSR Relay 4A3
PN-250SRA Relay 4A3
PP-151 Relay 4A4
PT-55 Relay 4F5
PT-150 Relay 4F2
PV-250 Relay 4C1
Pedestal-Mounted Junction Boxes 9C1
Phankill Units 2F1
Phase Selective Unit (PSU) 8N2
Piers
- Ladder (Search/Marker Sig.) 2B1
- Ladder (Color/Marker Sig.) 2B2
- Foundation, Cast Iron 9D1
- Foundation, Equipment Case 9B1
- Foundation, Equip. House 9A1
- Foundation, Radar Unit 14F1

Pick-Up Coils, Locomotive 15A6
Pinnacle, Flashing Light Assembly 10A1
Pipe-Mounted Junction Boxes 9C3
Platforms, Mainline Signal Assy.
- Search/Marker Light Sig. 2B1
- Color/Marker Light Sig. 2B2

Plug-In Relays, General Information 4
Plug-In Relays (Non-Vital)
- DC Flasher 4F1

P

Plug-In Relays (Non-Vital, Cont'd)
- Light Out 4F3
- Power Off 4F4
- Time Element, PT-150 4F2
- Time Element, PN-150T 4F6

Plug-In Relays (Vital)
- AC Track, Two-Element AC Vane 4C1
- Code (Code Generating) 4E1
- Code (Decoding) 4E2
- Code (Code Following) 4E3
- DC Cab (Neutral), PN-59 15E1
- DC Cab (Neutral), PN-159B 15E2
- DC Cab (Neutral), PL-59 15E3
- DC Line, Biased 4A1
- DC Line, Neutral 4A2
- DC Line, Magnetic Blowout 4A5
- DC Line, Magnetic Stick 4A4
- DC Line, Slow Dropaway and/or Pick-Up 4A3
- DC Track, Biased, Ordinary Acting, High Drop-away 4B1
- Switch Control, AC Type 4D1
- Switch Control, DC Type 4D1
- Time Element 4F5

Point Detectors (Operating Rods, Switch Circuit Controllers)
- Standard 3E1
- Rubber-Mounted 3E2

Point Detector Bars (Switch Machines) 3E5
Power Resistors, Track Circuit 17D1
Presence Monitor 8J2
Programmer
- AVI 13A1
- EPROM (GENISYS) 11C1
- EPROM (MICROLOK) 11E1

PSU (Phase Selective Unit) 8N2

R

R-2 Color Light Signals 2D4
Radar Unit, Doppler (Class Yard) 14F1
Ramps, Protective (Tie Mount) 8M1
RC-1 Track Rectifier 7C2
Reactors, Blocking (Audio Frequency Overlay) 8D1
Receivers
- Audio Freq. Overlay (AFO-IIC) 8D1
- Audio Freq. Overlay (AFO-I) 8D3
- High Freq. Track Circuit 8E1

Receptacle Contact Springs
- GRS/Safetran-Compatible, for PN-150 Relays 4G2
- PN-150 and PN-250 4G1

Rectifiers
- Constant Current Type 7A1
- Constant Potential Type 7A2
- Track 7C2

Rectifier Cross Reference Charts 7A0
Relay Adjustment Tools 18A1
Relay, Plug-In, Shelf-Mount Bracket 4
Relay, Plug-In, Shelf-Mount Frame 4
Relay, Plug-In, Test Plugs 4
Relays (See Plug-In Relays, Shelf Relays, General Purpose Relays)
Relays, Plug-In, General Info. 4
Relays, Shelf, General Info. 5

R

Relay Mounting Bases
- GRS/Safetran-Compatible, for PN-150 Relays 4G2
- PN-150 and PN-250 4G1

Resistors
- Adjustable 17D1
- MICROLOK Application 11E1
- Power (Track Circuit) 17D1
- Transit Signal 2E2

Retarders, Car
- Electro-Pneumatic, Model 67 14A1
- Electro-Pneumatic, Model 81 14A4
- Weight-Prop., Model 50A 14A2
- Weight-Prop., Model 50B 14A3

Retarder Equipment
- Control Valve 14B1
- Cylinder Kit 14D4

Retarder Equipment
- Exhaust Valve 14B2
- Heavy Car Modification Kit 14D1
- Hydraulic Piston Accumulator 14D3

Retarder Short Stroke Kit 14D2
Retarder Tools 14A4
Rods
- Connecting (Switch Machine) 3E5
- Lock, (Switch Machine) 3E5
- Switch Circuit Operating
  - Standard 3E1
  - Rubber-Mounted 3E2
- Swivel Front (Switches) 3E4

Roller Bearing Assy. (Switches) 3E3
Roundels and Guards
- Inclined Cover Glass Assy. 2F1
- Grade Crossing Signal Light Roundel Guard 10B7

S

Safetran/GRS-Compatible Relay Base, for PN-150 Relays 4G2
Searchlight, Signal 2D1
Searchlight, Dwarf Signal 2C1
Secondary Surge Supressors 17A2
Shelf Relays (Non-Vital)
- Control (Approach Lighting) 5E5
- Control (Flasher) 5E1
- Control (Light Out) 5E3
- Control (Time Element) 5E2
- DC Line (Magnetic Blow-Out) 5A4
- Misc. Control (Power Off) 5E4

Shelf Relays (Vital)
- Code (Code Following) 5D2
- Code (Code Transmitting) 5D1
- DC Line (Biased) 5A1
- DC Line (Neutral) 5A2
- DC Line (Polarized) 5A5
- DC Line (Slow Drop and Pick-Up) 5A3
- Switch Overload Control (AC) 5C2
- Switch Overload Control (DC) 5C1
- DC Track (Biased) 5B1
- DC Track (Neutral) 5B2
- DC Track (Polarized) 5B3

Shelf Relay Brackets and Shock Absorbers 5F1
Shock Absorbers, Shelf Relay 5F1
Short Stroke Kit for Models 31 and 32 Car Retarders 14D2
Signs, Grade Crossing
- Sheet Metal 10B3
- Illuminated 10B11

S

Signals
- Color Light, R-2 2D4
- Color Light, Electric Switch 2C3
- Color Light Dwarf 2C2
- Grade Crossing 10B7
- Marker Light, MCL-101 2D3
- Marker Light, HC-33 2D5
- Searchlight Dwarf 2C1
- Searchlight 2D1
- Transit Color Light, Assy. 2E1
- Transit Color Light Units 2E2

Skates, Hand (Class Yard) 14C1
SL-6A Electric Switch Lock 3D3
SL-21A Electric Switch Lock 3D4
SL-25 Electric Switch Lock 3D5
SL-26 Electric Switch Lock 3D5
Solid State Timer, 5-Second 17C1
Speedometers, Cab Signal 15A7
SRA Power Resistors, Track Ckt. 17D1
Stencils, Transit Signal Lens 2E2
Storage Units (FCE-500) 11B1
Surge-Ripple Filter 8D4
Surge Suppressors, Secondary 17A2
Switch Circuit Controller 3D1
Switch Locks
- SL-6A 3D3
- SL-21A 3D4
- SL-25, SL-26 3D5

Switch Machines
- Electric, M3, M23A, M23B 3A1
- Electric, YM-4 3B2
- Electro-Pneumatic, A-5 3A2
- Electro-Pneumatic, A-10 3C1
- Electro-Pneumatic, DA-10 3B1
- Electro-Pneumatic, NA-15 3B4
- Hand-Operated, T-20, T-21 3A4
- Motor, Perm Mag, Retrofit 3A1

Switch Machine Valve 3D2
Swivel Front Rods (Switches) 3E4
Swivel Point Lugs (Switches) 3E4

T

T-20, T-21 Hand-Operated Switch Machines 3A4
Test Sets
- FCE-500 PCBs 11B1
- Six-Code (Cab Signal) 15D1

Terminal Blocks, K-10, K-40 17D1
Terminal Caps, Insulated Molded 17D1
Terms and Conditions 1B1
TH-10 Relay 5E2
Timer, 5-Second 17C1
Tools
- Model 81 Retarder 14A4
- Relay Adjustment 18A1

Track Circuits
- Audio Freq. Overlay (AFO-IIC) 8D1
- Audio Freq. Overlay (AFO-I) 8D3
- Audio Frequency, Transit 8D5
- FR-HI Shunt 8F1
- High Frequency 8E1
- Phase-Selective (PSU) 8N2
- TRU-II (Power Frequency) 8N1
- Type "C" 8C1

Track Circuit Power Resistors 17D1
Track Resonant Unit (TRU-II) 8N1
Train Stop, Automatic (Cab Signal) 15B1

T

Transceivers
- Audio-Track 8D2
- Area Warning 8E2

Transformers, Air Cooled
- W-400 7D1
- W-800 7D2
- Transit Signal 2E2

Transformer Cross Ref. Charts 7D0
Transit Signal
- Assemblies 2E1
- Units 2E2

Transmitters
- Audio Freq. Overlay (AFO-IIC) 8D1
- Audio Freq. Overlay (AFO-I) 8D3
- High Freq. Track Circuit 8E1

Transponder
- AVI 13A1
- AW-10 Area Warning 8E2

Transzorbs, MICROLOK Appl. 17D1
TRU-II Track Circuit and TRU-II Code Reset Module 8N1
Type IV Weigh Rail 14E1

U

U-5 Switch Circuit Controller 3D1
USG-A Lightning Arresters 17A1
USSP Secondary Surge Suppressors 17A2

V

Vital Relays (See Plug-In Relays, Shelf Relays)

W

W-400 Air Cooled Transformers 7D1
W-800 Air Cooled Transformers 7D2
WD-30 Wheel Detector 8H1
WD-30D Wheel Detector 8H1
Weigh Rail (Class Yard) 14E1
Weight-Proportional Retarder
- Model 50A 14A2
- Model 50B 14A3

Wheel Dectectors
- WD-30, WD-30D 8H1
- ACCUTECT 8H2

Wrap Around Unit, MICROCODE 8G1

X

XA-120 Junction Box Cross Arms 10B6
X-2 Exhaust Valve (Retarder) 14B2

Y

Y-M4 Electric Switch Machine 3B2

SIGNALS

MAINLINE SIGNAL ASSEMBLIES

Searchlight and Marker Light Signal Units RSE-2B1
Color Light and Marker Light Signal Units RSE-2B2

DWARF SIGNAL ASSEMBLIES

H-2 Searchlight Dwarf Signals RSE-2C1
N-2 Color Light Dwarf Signals RSE-2C2
ES-20 Color Light Electric Switch Signals RSE-2C3

SIGNAL UNITS

H-2 Searchlight Signal Units RSE-2D1
MCL-100 Modular Color Light Signal Units RSE-2D2
MCL-101 Marker Light Signal Unit RSE-2D3
R-2 Color Light Signals RSE-2D4
HC-33 Marker Light Signal Unit RSE-2D5

TRANSIT SIGNALS

Transit Signal Assemblies RSE-2E1
Transit Signal Units RSE-2E2

GENERAL SIGNAL ACCESSORIES

Inclined Cover Glass Assembly and Phankill Units RSE-2F1

MAINLINE SIGNAL ASSEMBLIES

SEARCHLIGHT AND MARKER LIGHT SIGNAL UNITS

Mainline signal assemblies utilizing US&S's H-2 Searchlight and/or MCL-101 Marker Light are suitable for most standard applications. These signal assemblies are available in 14 ft., 17 ft., 22 ft. and 27 ft. heights with one, two or three light units. All components and masts are predrilled for quick and easy assembly and erection.

DESCRIPTION

Mast and Ladder Assembly

Aluminum masts with galvanized steel ladders are available for signal heights of 17 ft., 22 ft. and 27 ft. These masts are fabricated from 5 and 6 inch aluminum pipe, with the 5 inch used for 17 and 22 ft. masts and the 6 inch used for 17, 22 and 27 ft. masts. The 27 ft. aluminum mast does not have a standard part number and must be ordered through US&S Sales. When ordering this mast, specify all hole center dimensions.

Steel masts (all heights) are also fabricated from 5 and 6 inch pipe. The 27 ft. steel mast incorporates a standard 5 inch pipe post (upper section) fitted into a 6 inch pipe post (lower section). This arrangement gives added strength for the 27 ft. height.

Both the aluminum and steel masts are equipped with a junction box base. Refer to the illustration below for base mounting dimensions.

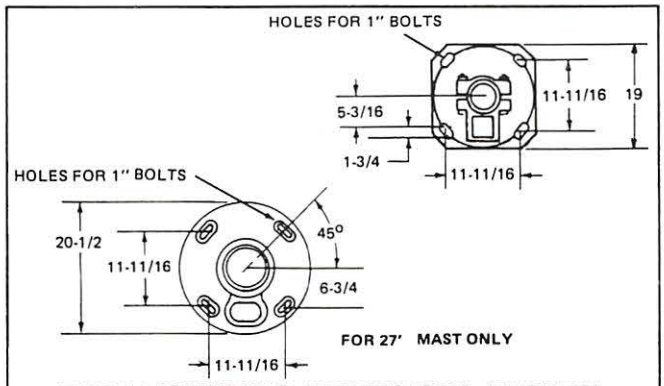

BASE MOUNTING DIMENSIONS (INCHES)

The galvanized steel ladder assemblies consist of ladder sections, platforms, hand rail ladder stays and, when ordered, foundation piers. The ladder assemblies illustrated on pages 2 and 3 show three signal units with related ladder platforms. If less than three signal units are to be supplied, a ladder stay is furnished in place of a platform.

Signal Units

The mainline signal assemblies incorporate US&S's H-2 Searchlight Signal and/or MCL-101 Marker light. The MCL-101 may be used in place of the searchlight unit for single indication units. Refer to RSE-2D1 for the H-2 Searchlight signal and RSE-2D3 for the MCL-101 Marker Light signal.

FEATURES

- Factory-fitted components for easy assembly and erection.
- Rugged, long-life construction.
- All assemblies comply with AAR and state requirements.
- Many combinations available.
- Custom ordered to meet particular requirements.
- Mast heights to 27 ft.
- Use H-2 Searchlight and/or MCL-101 Marker Light signals.

HOW TO ORDER

1. Determine the number of signal light units required.
2. Using the diagram at the top of page 2, select the mast height according to the number of signal units. For example, if three signal units are required, the 22 ft. or 27 ft. assembly must be selected.
3. Order the mast (per required height), ladder assembly and hardware from the tabulations on pages 2 and 3. Several of the 5 inch aluminum mast assemblies are available under a single part no. These are shown on page 3.
4. Order Searchlight and/or Marker light signals (and mounting hardware) from RSE catalogs 2D1 and 2D3.
5. For special configurations not covered by this catalog section, contact the nearest US&S Sales office.

COPYRIGHT 1988, UNION SWITCH & SIGNAL INC.

STANDARD MAINLINE SEARCHLIGHT/MARKER LIGHT SIGNAL ASSEMBLIES

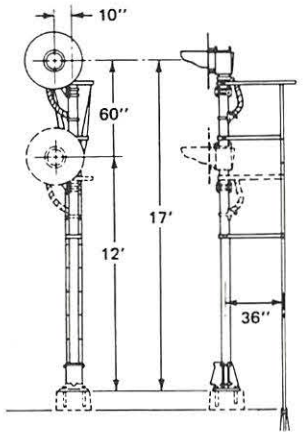

17 FT. ASSEMBLY - 1 OR 2 UNITS

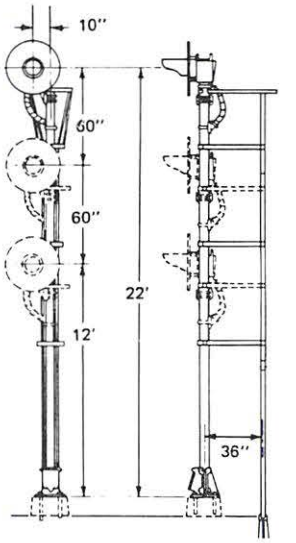

22 FT. ASSEMBLY - 1, 2 OR 3 UNITS

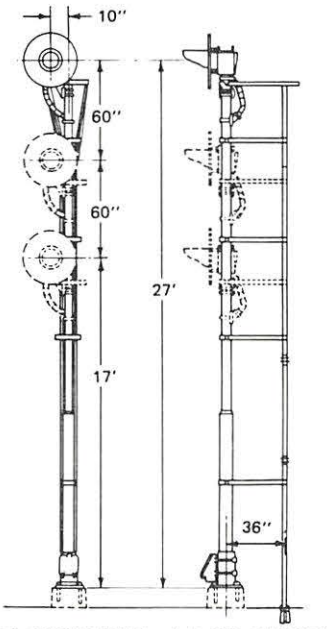

27 FT. ASSEMBLY - 1, 2 OR 3 UNITS

TYPICAL 3-UNIT, 22 FT. ASSEMBLY WITH ALUMINUM MAST

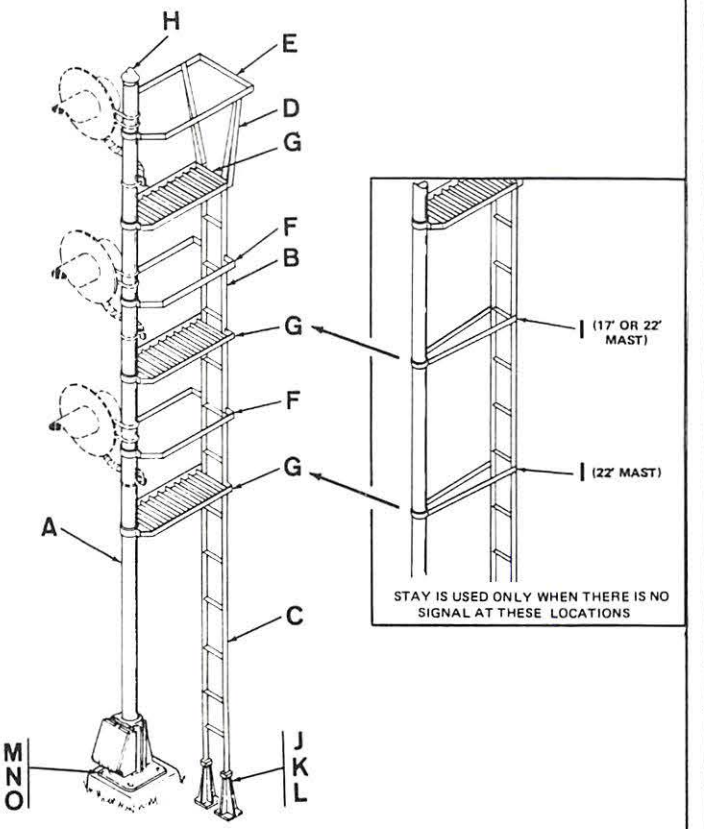

ASSEMBLIES WITH 6" ALUMINUM MASTS [1]

REF.	PART NO.	DESCRIPTION	17 FT. QTY.		22 FT. QTY.		
			1	2	1	2	3
A	N451394-1001	Mast, 6" (see Note 2)	1				
A1	N451394-1101	Mast, 6" (see Note 2)		1			
A2	N451394-1301	Mast, 6" (see Note 2)			1		
A3	N451394-1201	Mast, 6" (see Note 2)				1	
A4	N451364-1801	Mast, 6" (see Note 2)					1
B	N377906-001	Ladder, top section	1	1	1	1	1
C	N377872-001	Ladder, bottom section	1	1			
C1	N377876-001	Ladder, bottom section			1	1	1
D	N377932-001	Brace (for non-extended top platform)	2	2	2	2	2
D1	N377930-001	Brace (for non-extended top platform)	2	2	2	2	2
E	N451438-0201	Handrail, top	1	1	1	1	1
F	N451438-0301	Handrail, bottom		1		1	2
G	N128490-001	Platform (non-extended, for side-of-mast signal)	1	2	1	2	3
G1	N303733-001	Platform (extended, for front-of-mast signal)	1	2	1	2	3
H	N437391-001	Cap, pipe	1	1	1	1	1
I	N434461	Stay, ladder	1		2	1	
J	M062563	Pier, ladder	2	2	2	2	2
K	J466076-0120	Bolt, hex hd., 1/2" x 1-1/4" galvanized	4	4	4	4	4
L	J480210-0105	Nut, hex, 1/2" galv.	4	4	4	4	4
M	M254806	Bolt, fnd., 1" x 24" galv. (see Note 3)	4	4	4	4	4
N	J480210-0159	Nut, 1" hex, galv. (see Note 3)	4	4	4	4	4
O	J475132-0121	Washer, 1" stl. galv. (see Note 3)					

NOTES

1. 6 inch mast also available in 27 ft. (no standard part number). Contact US&S Sales for order. Specify all hole center dimensions.
2. With junction box clamp base, 24 terminal posts.
3. Foundation hardware optional, supplied per order.

17 FT. ASSEMBLY WITH 5" ALUMINUM MAST

PART NO.	DESCRIPTION
X451193-3801	2-signal unit assembly, side-of-mast mount, includes: - 5 inch aluminum mast - Clamp-on junction box base with 24 terminal posts - Ladder (single piece) - Two ladder braces - Top handrail - Single middle-to-bottom handrail assembly - Two platforms with extension for 5" pipe. - Pipe cap - Ladder foundation pier and hardware

TYPICAL 3-UNIT, 27 FT. ASSEMBLY WITH STEEL MAST

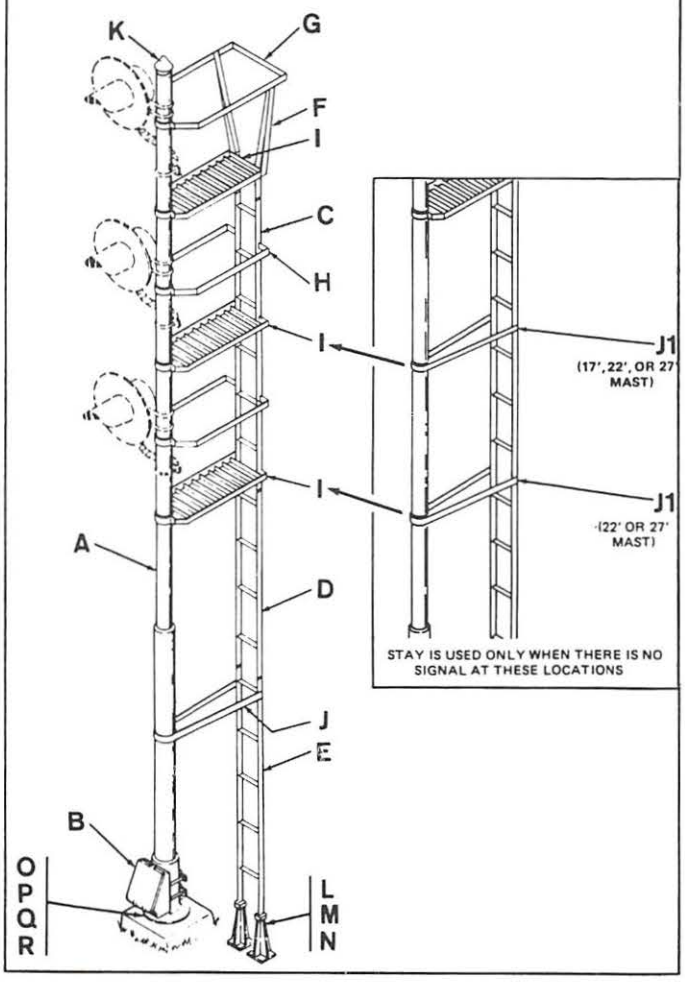

22 FT. ASSEMBLIES WITH 5" ALUMINUM MAST

PART NO.	DESCRIPTION
X451193-3902	2-signal unit assembly, side-of-mast mount. Same parts as 17 ft. assembly at left.
X451193-3901	3-signal unit assembly, side-of-mast mount. Same parts as 17 ft. assembly at left, except: - Separate top, middle and bottom handrail assemblies - Three platforms with extension for 5" pipe.

ASSEMBLIES WITH 5" STEEL MASTS

REF.	PART NO.	DESCRIPTION	17 FT. QTY.		22 FT. QTY.			27 FT. QTY.		
			1	2	1	2	3	1	2	3
A1	N377693	Mast, 5" (1)		1						
A2	N377697	Mast, 5" (1)			1					
A3	N377699	Mast, 5" (1)				1				
A4	N377701	Mast, 5" (1)					1			
A5	N377703	Mast, 5"/6" (2)						1		
A6	N377705	Mast, 5"/6" (2)							1	
A7	N377707	Mast, 5"/6" (2)								1
B	N212958	Junc. box base, w/24 terms.(3)						1	1	1
B1	M104294	Clamp, half						2	2	2
B2	M104873	Bolt, hook, 3/4"						4	4	4
B3	J048026	Nut, hex, 3/4" (cad. plated)						4	4	4
C	N377906	Ladder, top sec.	1	1	1	1	1	1	1	1
D	N377874	" mid. sec.						1	1	1
E	N377872	" bot. sec.	1	1						
E1	N377876	" bot. sec.			1	1	1	1	1	1
F	N377932	Brace (4)	2	2	2	2	2	2	2	2
F1	N377930	Brace (5)	2	2	2	2	2	2	2	2
G	N377650	Handrail, top	1	1	1	1	1	1	1	1
H	N377653	Handrail, middle/bottom		1	1	1	2		1	2
I	N116628	Platform (6)	1	2	1	2	3	1	2	3
II	N220676	Platform (7)	1	2	1	2	3	1	2	3
J	N128592	Stay, ladder						1	1	1
J1	N128591	Stay, ladder	1		2	1		2	1	
K	N377598	Cap, pipe	1	1	1	1	1	1	1	1
L	M062563	Pier, ladder	1	1	1	1	1	1	1	1
M	J046816	Bolt, sq. hd., 1/2" x 1-1/4" (cad. plated)	2	2	2	2	2	2	2	2
N	J048013	Nut, 1/2" (cad.)	2	2	2	2	2	2	2	2
O	M254806	Bolt, fnd. 1" x 24" (8)	4	4	4	4	4			
P	M122296	Bolt, fnd. 1" x 36" (8)						4	4	4
Q	J048030	Nut, Hex, 1" (cad. pl.) (8)	4	4	4	4	4	4	4	4
R	J047509	Wash., 1" stl. (cad. .pl.) (8)	4	4	4	4	4	4	4	4

NOTES

1. With junction box clamp base, 24 terminal posts.
2. 6" pipe (bottom), 5" pipe (top), with base arranged for junction box.
3. For use with items A6, A7 or A8.
4. For use with non-extended top platform.
5. For use with extended top platform.
6. For use with non-extended top platform and side-mounted signals.
7. For use with extended top platform and front-mounted signals.
8. Foundation hardware optional, supplied per order.

N-2 COLOR LIGHT DWARF SIGNAL

The N-2 Color Light Dwarf Signal is designed primarily for use in classification yards, but may be adapted for any application where a dwarf signal is required. This signal is a completely weather-proof, ruggedly built cast iron unit that will provide many years of efficient, trouble-free service. It is dc-powered and available in 2 and 3-color configurations.

DESCRIPTION

Case

The N-2 Color Light Dwarf Signal is housed in a weather-proof cast-iron case with hinged rear cover. Cases are provided for 2 and 3-aspect signals. The cover allows complete access to the lamp equipment for servicing. A hasp on the cover permits the unit to be padlocked. Screened ventilators are built into the door to enhance air circulation and prevent condensation. An optional, 1-1/2" x 1-1/4" reducing street ell can be installed in the base of the unit as a cable entrance.

Optical Assembly

The basic N-2 optical assembly consists of a lamp unit and doublet lens. This assembly may be easily removed as a unit from the front of the case. A lamp unit, with attached terminals, is mounted on a bracket and affixed to the lens housing. The lamp unit is accurately located so that the lamp filament is at the focal center of the lens system. Both single contact or special bayonet-base lamps may be used in the assembly. Refer to RSE-17B1 for lamp ordering information.

The doublet lens consists of a 5-1/2 inch diameter colored back lens and a 6-3/8 inch clear front converging lens. This lens doublet represents a combination of two special stepped lenses that give a wide angle of diversion to the light beam. The converging front lens can be replaced with an optional 10° or 30° (typical) spreadlight lens. A plastic converging front lens is also available. All N-2 signal units are equipped with prisms that deflect the light beam upward. Phankill units (optional) may also be installed on these signals.

Mounting

The N-2 signal is designed for mounting directly on a concrete foundation. The diagram below shows mounting specifications.

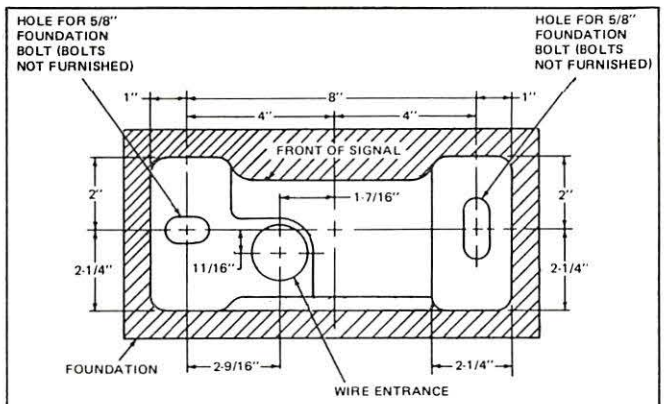

FOUNDATION REQUIREMENTS

FEATURES

- Weather-proof, cast-iron housing.
- Rear door provides complete access to optical components
- Incorporates precision optical assemblies
- Complies with AAR and state requirements
- 2 and 3-aspect units
- Many configurations possible

HOW TO ORDER

Order the complete N2 Color Light Dwarf Signal from the tabulations at the top of page 2. Among the options that can be ordered with these signals are:

- Circuit controller (specify normally open or closed contact)
- 10° or 30° spreadlight front lens
- Plastic or glass converging lens
- Phankill unit
- Street ell for cabling

For special configurations not covered in this catalog consult US&S Sales. Refer to pages 3 and 4 for replacement parts.

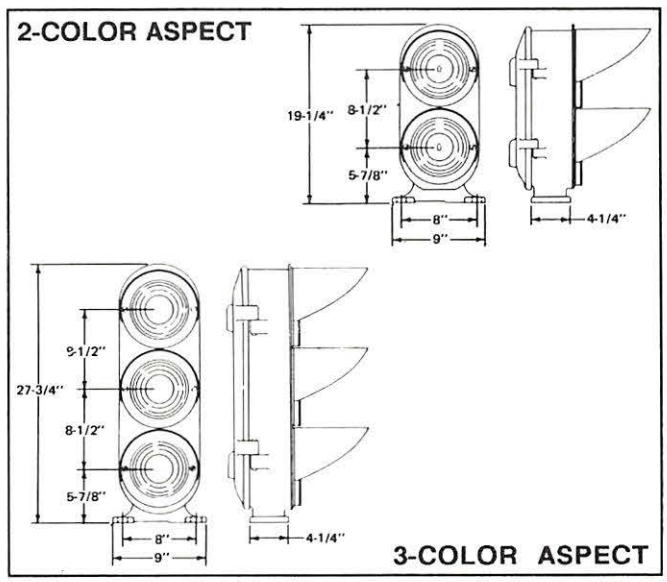

COPYRIGHT 1988, UNION SWITCH & SIGNAL INC.

ORDERING REFERENCES

2-Aspect Units, Complete

PART NO.	COLORS	LAMP BASE
N120721	Yellow-Red	Bayonet base
N197005	Yellow-Red	Candelabra base
N126110	Red-Yellow	Bayonet base
N128000	Red-Green	Bayonet base
N138808	Green-Red	Bayonet base
N206153	Green-Red	Candelabra base
N229500	Red-Lunar White	Bayonet base
N433758	Red-Lunar White	Candelabra base

3-Aspect Units, Complete

PART NO.	COLORS	LAMP BASE
N120747	Green-Red-Yellow	Bayonet base
N127982	Red-Yellow-Green	Bayonet base
N284774	Red-Green-Yellow	Candelabra base
N256061	Green-Red-Yellow	Candelabra base

REPLACEMENT PARTS

2-Aspect Units - Basic Case Assembly

ITEM	PART NO.	DESCRIPTION
1	N116673	Case and door
2	M116724	Case (1)
3	N068248	Door, complete (1)
4	M005873	Pin (1)
5	N072832	Hasp (1, 2)
6	M064973	Eyebolt (1, 2)
7	M207907	Pin (1, 2)
8	M068109	Wire Guide (1)
9	M068414	Insulation (1)
10	J051668	Screw, 10-32 x 1/2, round head, brass (1, 3)
11	J048172	Nut, 10-32, hex (1, 3)
12	(See Lens Units Tab. page 3)	Lens unit, top
13	(See Lens Units Tab. page 3)	Lens unit, bottom
14	J7500079-0120	Screw, 1/4-20 x 1-1/4, hex.
15	J745138-0111	Washer, 1/4 spring steel, lock

NOTES
1. Parts included under Item 1 part no.
2. Hasp assembly between door and case (for padlock); not shown in figure.
3. For wire guide (item 8); not shown in figure.

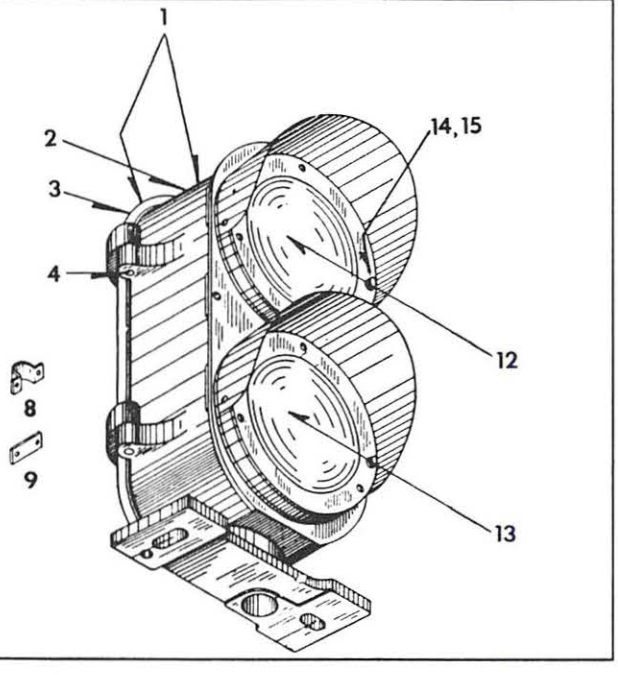

3-Aspect Units - Basic Case Assembly

ITEM	PART NO.	DESCRIPTION
1	N120746	Case and door
2	M120745	Case (1)
3	N068252	Door, complete (1)
4	M049634	Pin (1)
5	N072832	Hasp (1, 2)
6	M064973	Eyebolt (1, 2)
7	M207907	Pin (1, 2)
8	M068109	Wire Guide (1)
9	M068414	Insulation (1)
10	J051668	Screw, 10-32 x 1/2, round head, brass (1, 3)
11	J048172	Nut, 10-32, hex (1, 3)
12	(See Lens Units Tab. page 3)	Lens unit, top
13	(See Lens Units Tab. page 3)	Lens unit, middle
14	(See Lens Units Tab. page 3)	Lens unit, bottom
15	J7500079-0120	Screw, 1/4-20 x 1-1/4, hex.
16	J745138-0111	Washer, 1/4 spring steel, lock

NOTES
1. Parts included under Item 1 part no.
2. Hasp assembly between door and case (for padlock); not shown in figure.
3. For wire guide (item 8); not shown in figure.

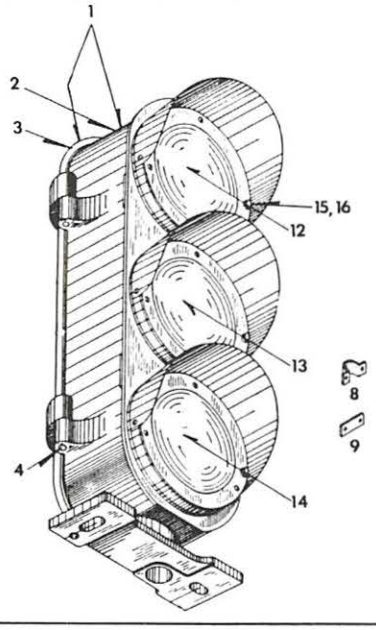

REPLACEMENT PARTS (cont'd)

Lens Units, Complete

PART NO.	COLOR	LAMP BASE
N141597-002	Yellow	Bayonet base
N221623-002	Yellow	Candelabra base
N141598-002	Red	Bayonet base
N221624-002	Red	Candelabra base
N141596-002	Green	Bayonet base
N221622-002	Green	Candelabra base
N229499-002	Lunar White	Bayonet base
N338515-002	Lunar White	Candelabra base

Lens Unit Assembly

ITEM	PART NO.	DESCRIPTION
1	M436242	Lens Housing
2	(See Back Lens tab. at upper right)	5-1/2" back Lens
3	J053125	6-3/8" front lens, clear glass (see also tab, lower right)
4	M076735-001	Clip
5	J525282-0104	Screw, 10-32 x 1/4 Fil. hd.
6	J525052	Screw, 10-32 x 1/4 Rnd. hd. SS
7	J525281-0106	Screw, 10-32 x 1/4 Rnd. hd.
8	M435827	Lens ring
9	M068505	Hood
10	N123630	Lamp receptacle (see also tab.)
11	M116607-001	Stud
12	N134327	Deflecting unit
13	M134328	Lens housing (1)
14	J053703	Lens, clear glass (1)
15	M301787	Spring (1)
16	M093420-001	Nut

NOTES 1 Parts included under Item 12 part no.

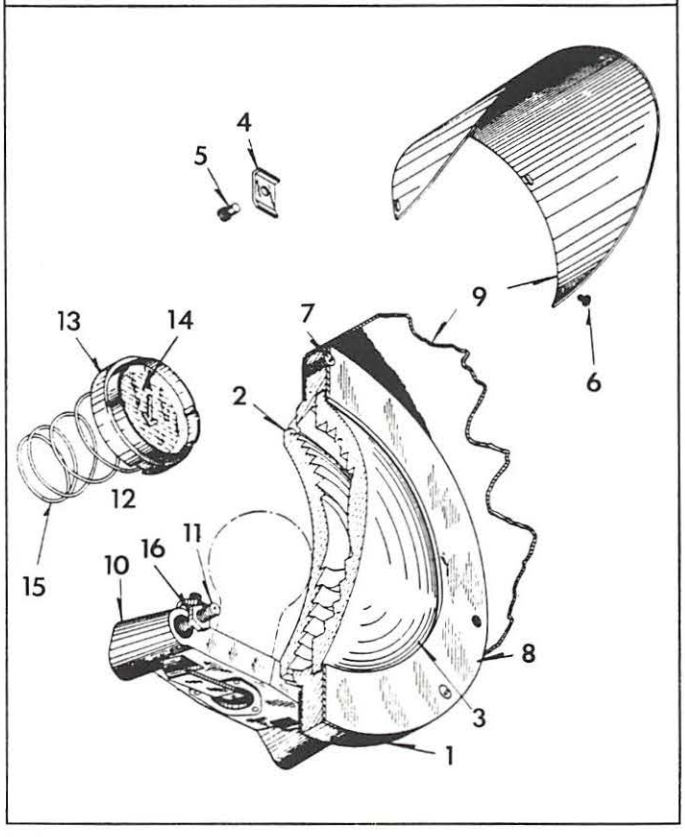

Back Lenses

PART NO.	DESCRIPTION
J053124	Yellow
J053131	Red
J053133	Green
J053164	Lunar White

Lamp Receptacle

ITEM	PART NO.	DESCRIPTION
1	M123925	Receptacles
2	M123647	Socket
3	M122489	Terminal post
4	J480300	Nut, 14-24 hex, brass
5	J047818	Washer, 17/64 x 9/16, copper
6	N123641	Contact spring
7	J070855	Eyelet, flat flange

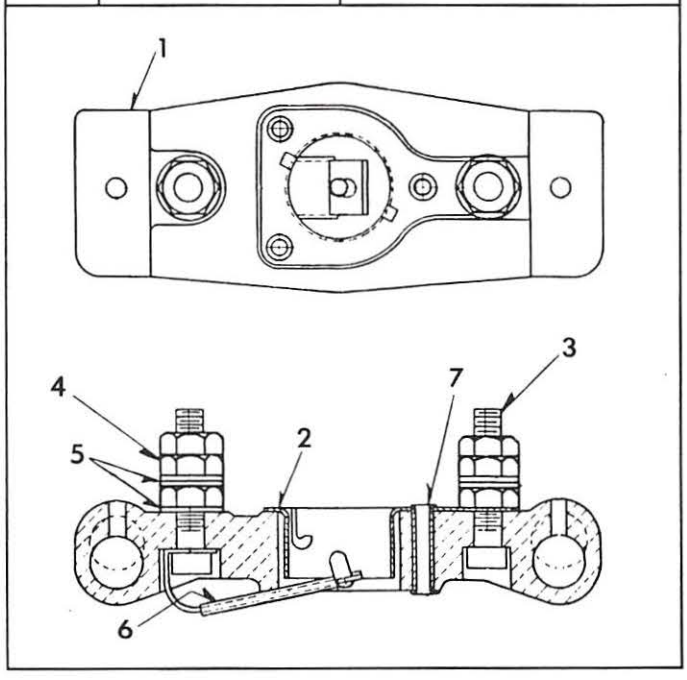

Miscellaneous Optional Components

PART NO.	DESCRIPTION
	6-3/8" front lens
J053108	30° spreadlight
J053737	10° spreadlight
J053496	Plastic lens
N197788	Phankill Unit
	Pushbutton circuit controller
N307827	Normally closed contact
N122582	Normally open contact
J032595	1-1/2" x 1-1/4" street ell, galvanized
J700746	1-1/2" jake, cadmium plated, for street ell.

ES-20 COLOR LIGHT ELECTRIC SWITCH SIGNAL

The US&S ES-20 Color Light Electric Switch Signal is typically used for indicating the position of power-operated switches at classification and car storage yards. However, its design permits use as a light repeater of switch position wherever electric energy is available for lighting purposes. The ES-20 is ruggedly constructed to provide many years of maintenance-free service.

DESCRIPTION

The weatherproof aluminum case has four openings (two front, two back), each containing a lens doublet. A lamp unit is located at the focal point between each set of front and back lens doublets. Wingnut locking devices are used to secure the unit's top cover. This allows easy removal for access to internal components such as lamps and terminals. A hinged hasp is available on some models to permit pad locking of the cover. Some ES-20 units are shipped with two or three blanking plates to replace selected lens sets. An integral mounting base allows quick and easy mounting of the unit.

Each of the four lens doublets consists of a 3-1/2" diameter clear lens and a 30° colored spreader glass for horizontal spread in each direction. A wire screen is located between the clear lens and the spreader glass to protect against phantom indications.

The lamp unit, including terminals, is mounted on a bracket which, in turn, is fastened to the case. Lamp receptacle options include S-11 single contact bayonet candelabra base and medium screw base. Lamps are not provided with the ES-20 signal assembly. The signal assembly is equipped with a separate hood for each lens unit.

FEATURES

- One lamp used for each front/back indication.
- Built-in protection against phantom indications.
- Can be used as a switch position indicator or light repeater.
- Meets AAR and state requirements.
- Lamp and wiring easily accessible.
- Design promotes long service life.

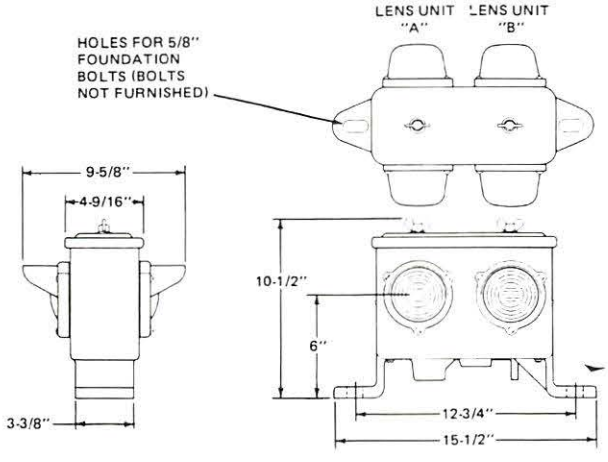

HOW TO ORDER

Order the ES-20 Color Light Electric Switch signal from the parts tabulation below. If the required configuration is not in this listing, consult US&S Sales to order a new design. Lamps are not included in the assembly and must be ordered separately. Refer to RSE-17B1 for selection of lamps. For a detailed parts listing of the ES-20, including mounting hardware, request service manual SM-6334.

	LENSES		
PART NO.	A	B	COMMENTS
N451351-0202	G	R	S-11 S.C.B.C. lamp receptacle.
N451351-0213	G	R	S-11 S.C.B.C. lamp receptacle, two blanking plates.
N451351-0203	G	Y	S-11 S.C.B.C. lamp receptacle, two blanking plates.
N451351-0206	G	Y	S-11 S.C.B.C. lamp receptacle.
N451351-0208	G	Y	Screw base lamp receptacle.
N451351-0204	R	Y	S-11 S.C.B.C. lamp receptacle.
N451351-0205	R	Y	Screw base lamp receptacle.
N451351-0207	B	Y	Locking hasp and screw base lamp receptacle.
N451351-0216	B	Y	S-11 S.C.B.C. lamp receptacle.
N451351-0222	B	Y	Screw base lamp receptacle.
N451351-0210	Y	KP	Screw base lamp receptacle.
N451351-0219	Y	KP	S-11 S.C.B.C. lamp receptacle.
N451351-0215	LW	R	S-11 S.C.B.C. lamp receptacle, two blanking plates.
N451351-0218	LW	R	Screw base lamp receptacle.
N451351-0217	G	LW	S-11 S.C.B.C. lamp receptacle.
N451351-0221	--	C	Screw base lamp receptacle, three blanking plates.
N451351-0225	Y	LW	S-11 S.C.B.C. lamp receptacle, locking hasp.
N451351-0201	LW	Y	S-11 S.C.B.C. lamp receptacle.
N451351-0209	R	G	Screw base lamp receptacle.
N451351-0214	LW	LW	S-11 S.C.B.C. lamp receptacle.

G = Green Y = Yellow KP = Kerosene Purple
R = Red B = Blue LW = Lunar White
C = Clear

PRINTED IN USA

UNION SWITCH & SIGNAL DIVISION
AMERICAN STANDARD INC. / PITTSBURGH, PA 15237

COPYRIGHT 1987, US&S DIVISION OF AMERICAN STANDARD INC.

H-2 SEARCHLIGHT SIGNAL

The highly reliable H-2 Searchlight Signal provides dependable service in a variety of applications. It is designed to produce a concentrated light beam for long range indications on tangent or small curvature track. This signal is compact, rugged, lightweight and easily accessed for routine maintenance. The H-2 also requires low level operating power, but provides a brilliant aspect image, thanks to its precision optical system. It can be used for ground, bridge and dwarf signal applications.

DESCRIPTION

Case

The H-2 Searchlight Signal assembly consists of an aluminum case that houses an operative or inoperative signal unit and objective lens assembly. Adjustable mounting brackets are available for front or side-of-mast mounting of the case. The case can also be equipped with a lens hood and background. Cabling to the signal can be routed through a 45° or 90° street ell in the base. A built-in sight is provided for alignment purposes. The operative or inoperative signal unit is accurately positioned inside the case with a fixed pin and two bolts.

Operative and Inoperative Signal Units

The operative signal unit used in the H-2 Searchlight consists of an aluminum upper cover and a clear plastic shell sealed against the cover. This type of unit displays three color indications. External electrical connections are made on AAR terminals below the lamp unit. A plug coupler can be provided on these terminals for quick disconnection of wiring. A variable resistor (optional) allows adjustment of lamp intensity.

Within the operative signal unit are the DC operating unit with three color roundels, lamp unit and fixed lens assembly. The DC operating unit incorporates a 3-position relay that places one of the three colored roundels between the lamp and the objective lens. Roundel color options include red, green, yellow and lunar white.

The inoperative signal unit used in the H-2 Searchlight utilizes the same aluminum cover, lamp and lens components as the operative signal unit. However, this unit incorporates a single color roundel mounted in a fixed position between the lamp and lens assembly. The signal is not equipped with a DC Operating Unit.

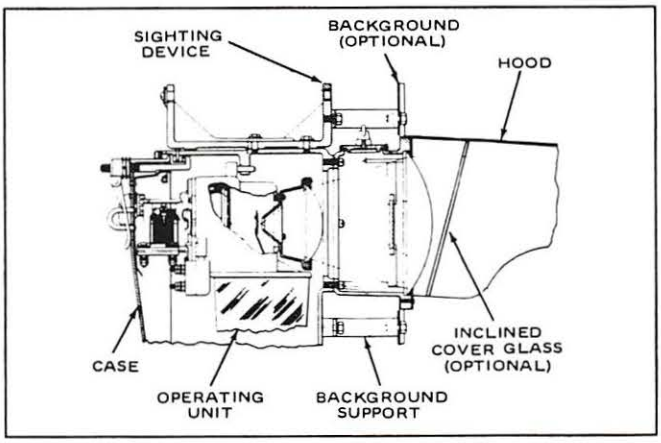

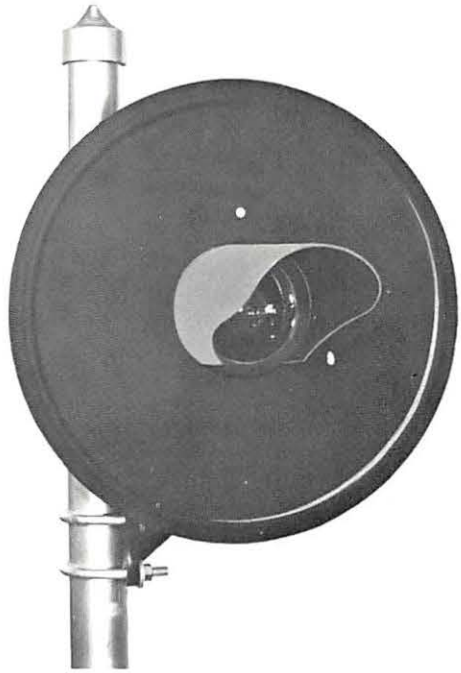

Optical Components

The objective lens used in the H-2 Searchlight Signal has a plano-convex figure. It is 8-3/8 inches in diameter and has a focal length of 5 inches. A polished ellipitcal reflector in the operative (or inoperative) unit channels a large fraction of the lamp light through the colored roundel. This light focuses at the focal point of the objective lens (see diagram at lower left).

The H-2 incorporates colored roundel lenses 1 inch in diameter and approximately 1/16 inch thick. The roundels are made of a specially developed heat-resistant glass that is accurately ground and polished. As an additional precaution against breakage, the roundels are secured to a light aluminum frame.

Optional optical components for the H-2 include a close-up prism, a spreadlight roundel and an inclined cover glass assembly. The close-up prism provides an indication in the line of sight of the engineman as he approaches the signal and has passed out of the limits of the spread of the main beam.

Special 16° and 30° spreadlight roundels can be applied over the 8-3/8 inch objective to meet the varying conditions for curves where it is necessary to have a horizontal spread greater than that provided by the standard optical system. These roundels spread the light in both directions are are designed primarily for use on reverse curves or for very sharp curves where only short range is required. Deflecting 10° and 20° roundels are available for deflecting the beam in one direction only. The 10° roundel is sufficient for most curves, while the 20° roundel is used for extreme requirements.

Inclined cover glass assemblies are available to provide deflection and diffusion characteristics for special track curvature or geograhic conditions. These assemblies are available with an optional phankill unit that greatly reduces phantom image effects encountered in some installations. Refer to catalog RSE-2F1 for ordering the inclined cover glass and phankill and the spreadlight roundel.

COPYRIGHT 1988, UNION SWITCH & SIGNAL INC.

FEATURES

- Useful for many applications
- Presents all aspects through one lens
- Easily maintained
- Reliable operation
- Low power operation, but provides brilliant image
- Precision optical system
- Lamps replaceable without affecting focus
- With or without hood or background
- Front or side-of-mast mounting
- Adjustable mounting bracket and built-in aiming sight
- 3-aspect operative or 1-aspect inoperative signal unit
- Numerous optical enhancements for optimum performance

HOW TO ORDER

Because of the many configurations possible with the H-2 Searchlight signal, complete signal assemblies are not provided under a single part number. To order a complete signal:

1. Order the type of outer signal case required from the "SIGNAL CASES" tabulation below.
2. Order the type of operative or inoperative signal unit from the "SIGNAL UNITS" tabulations at the lower right.
3. Order all required mounting hardware from the "INSTALLATION MATERIAL" tabulation on page 6.
4. Order the optional background and its hardware from the "BACKGROUND" tabulation at the upper right.
6. Order replacement parts for in-service H-2 signals from the tabulations on pages 3 through 8.

Refer to catalog RSE-2F1 for spreadlight roundels applied to the 8-3/8 inch lens, and for the inclined cover glass (with or without phankill). Order lamps from catalog RSE-17B1. Contact US&S Sales for special H-2 Searchlight Signal configurations and parts not covered in this catalog.

ORDERING REFERENCES

SIGNAL CASES
(See p. 5 for general configuration)

PART NO.	DESCRIPTION	
N451353-0601	With:	Close-up clear prism, 25° deflecting Hood 2", 45° street ell Adjustable bracket for side-of-mast or front-of-mast mount (at top)
N451353-0602	With:	Close-up clear prism, 25° deflecting Hood 2", 90° street ell Adjustable bracket for side-of-mast or front-of-mast mount
N451353-0603	With:	Hood 2", 45° street ell Adjustable bracket for side-of-mast or front-of-mast mount (at top)
	Without:	Close-up prism
N451353-0604	With:	Hood 2", 90° street ell Adjustable bracket for side-of-mast or front-of-mast mount
	Without:	Close-up prism
N451353-0605	With:	Hood 2", 45° street ell Close-up prism
	Without:	Adjustable bracket for side-of-mast or front-of-mast mount

ORDERING REFERENCES (cont'd)

BACKGROUNDS

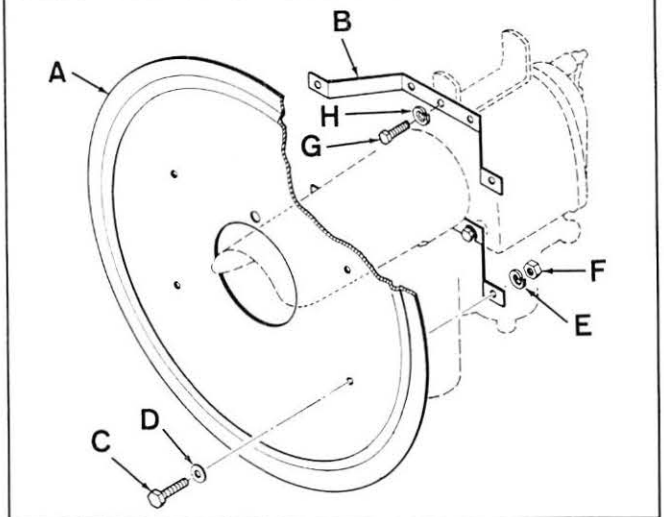

REF.	PART NO.	DESCRIPTION	QTY.
A	M144459	Background, std., 35" diameter	--
A1	M213322	Background, opt., 20" diameter	--
B	M178937	Support, 35" background	2
B1	M223250	Support, 20" background	2
C	J500080-0116	Bolt, 5/16" x 1", hex	4
D	J475132-0113	Washer, 5/16" flat	4
E	J475138-0012	Washer, 5/16" lock	4
F	J480210-0102	Nut, hex, 5/16"	4
G	J500099-0112	Screw, 3/8" x 3/4" hex, cap	3
H	J475138-0113	Washer, 3/8" lock	3

SIGNAL UNITS - OPERATIVE
(See p. 6 for general configuration)

PART NO.	DESCRIPTION					
	ROUNDEL			COIL		PLUG COUP.
	LEFT	MIDDL.	RIGHT	V	OHM	
N290148*	Yellow	Red	Green	5.5	250	With
N290150*	Yellow	Red	Green	5.5	250	Without
N294139	Yellow	Red	Green	8.0	500	Without
N294167	Yellow	Red	Green	8.0	500	With
N432812	L. W.**	Red	Green	5.5	250	With
N437604	L. W.**	Red	Green	5.5	250	Without
N432971	Yellow	Red	Red	5.5	250	With
N436864	Yellow	Red	Red	5.5	250	Without
N304743	L. W.**	Red	Red	5.5	250	Without
N311459	L. W.**	Red	Red	5.5	250	With
N436865	Green	Red	Red	5.5	250	Without
N304512	Yellow	Red	L. W.**	5.5	250	Without
N437146	Green	Red	L. W.**	5.5	250	With
N438302	L. W.**	Red	Yellow	5.5	250	Without

* These signal units have an 8-3/8" compound lens type and a 25° deflecting close-up clear prism for tangent track of slight curvature. To adapt to track of greater curvature or other geograhical conditions, order inclined cover glass assembly with or without phankill. Refer to catalog RSE-2F1.

** Lunar White

SIGNAL UNITS - INOPERATIVE

PART NO.	DESCRIPTION
N169545	Red roundel
N175970	Yellow roundel

ORDERING REFERENCES (cont'd)

INSTALLATION MATERIAL (Includes Flexible Steel Conduit)

The tabulation below lists parts required to install one H-2 Searchlight Signal. Included is material for both steel or aluminum mast installations. Note that the 2 inch flexible steel conduit and connector (Refs. D E and E1) may be replaced with rubber-covered cable or 1-1/2 inch Sealtite conduit. These items are listed in the bottom two tabulations.

REF.	PART NO.	DESCRIPTION	QTY.
A	M136690	U-bolt, 3/4" galv., for 5" steel mast	2
A1	M044199-001	U-bolt, 3/4" galv., for 6" aluminum mast	2
B	J480210-0107	Nut, 3/4" hex, galv., for refs. A or A1	4
C	M451195-4202	Shim, for steel mast only	2
D	J070608	Connector, 2" jake box	1
E	M320859-011	Conduit, 2" flexible steel, galvanized, for front-of-mast mounting.	1
E1	M320859-021	Conduit, 2" flexible steel, galvanized, for side-of-mast mounting.	1
F	N103713	Cable outlet, for steel mast	1
F1	N451435-0202	Cable outlet, for aluminum mast	1
G	M046567-001	U-bolt, 1/2", for Ref. F	1
G1	M375212-001	U-bolt, 1/2", for Ref. F1	1
H	J048013	Nut, 1/2" hex, cad. plated, for Ref. G	2
H1	J480210-0105	Nut, 1/2" hex, galvanized, for Ref. G1	2

RUBBER-COVERED CABLE (Replaces 2" steel conduit and connector, Refs. D, E and E1 above)

PART NO.	DESCRIPTION	QTY.
M377556	Cap (one required with each straight connector listed below)	1
J032057	Reducing bushing, 2" to 1-1/2" (one required with each straight connector listed below)	1
J700631	1-1/2" Crouse-Hinds type CGB5911 straight connectors (1-3/16" to 1-3/8" diameter cable)	2
J070543	1-1/2" Crouse-Hinds type CGB599 straight connectors (1" to 1-3/16" diameter cable)	2
J700669	1-1/2" Crouse-Hinds type CGB598 straight connectors (7/8" x 1" diameter cable)	2

SEALTITE CONDUIT 1-1/2" (MAX.) (Replaces 2" steel conduit and connector, Refs. D, E and E1 above)

PART NO.	DESCRIPTION	QTY.
M377556	Cap (one rerquired with T. & B. fitting listed below)	1
J323152	T. & B. straight liquid-tight fittings, 1-1/2"	2
J032057	Reducing bushing, 2 to 1-1/2"	1
A069001	American Brass "Sealtite" flexible liquid-tight conduit, 1-1/2". Specify 26" length for side-of-mast mounted signal or 46" length for front-of-mast mounted signal	1

INSTALLATION MATERIAL

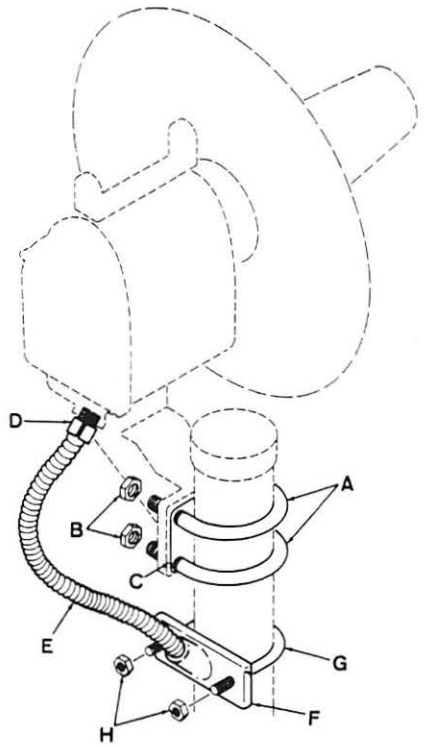

REPLACEMENT PARTS

SIGNAL CASES (See Figure 1 on page 5)

REF.	PART NO.	DESCRIPTION
1	M147483-001	Bracket, side-of-mast or front-of-mast (at top)
2	M162983-001	Bracket, side-of-mast or front-of-mast
3	N152843-001	Sight
4	M152842-001	Bracket (Note 1)
5	N152945-001	Tube, site (Note 1)
6	J525261	Screw, 8-32 x 3/8 Rnd. Hd. SS (1)
7	M152811-001	Sight plate (Note 1)
8	M413939	Clamp (Note 1)
9	J500080-0116	Screw, 5/16 - 18 x 1, hex
10	J475132-0113	Washer, 5/16, galvanized
11	M038851-001	Pin
12	J487012	Pin roll
13	M167996-001	Adapter
14	J522171-0116	Screw, 5/16 - 18 x 1
15	J475138-0112	Washer, 5/16 shakeproof lock
16	N264109	Prism holder
17	J525052	Screw, 10-32 x 1/4, rnd. hd. SS
18	J531601	Prism, light deflecting
19	M263154-001	Cover
20	J460117	Bolt, 5/16-18 x 1-1/4, hex
21	J047398	Gasket, cork
22	J053746	Lens, 8-3/8"
23	N260573-001	Lens ring, complete
24	M260572-001	Lens ring (Note 2)
25	M260576-001	Stud (Note 2)
26	M298304	Washer (Note 2)
27	J052319	Screw, 14-24 x 1/4, Fil. Hd. (2)
28	J525281-0106	Screw, 10-32 x 3, round head
29	M184414	Hood
30	J480210-0107	Nut, 3/4-10, hex
31	M146404	Washer
32	M144205-001	Bracket, supporting

Notes (1) Included under Ref. 3 part number.
(2) Included under Ref. 23 part number.

REPLACEMENT PARTS

SIGNAL CASES (cont'd from page 3)

REF.	PART NO.	DESCRIPTION
33	M144627-001	Pin, stainless steel
34	J047639	Washer, steel plate
35	J048691	Cotter, 1/8 x 3/4
36	M080821-001	Washer
37	J480210-0159	Nut, 1-8 hex, steel jam
38	J466074-0136	Bolt, 1-8 x 4-1/2, square head
39	J069676	Bushing, 3/4 conduit
40	M213628	Ventilator
41	M213626-001	Nipple
42	M065018-001	Screw
43	J032603	Street ell, 2", 45°
44	J032490	Street ell, 2", 90°
45	J032927	Protector, pipe thread
46	--	Operating unit (Note 3)
47	N451353-0102	Assembly, case and door
48	M186742-001	Case (Note 4)
49	M451354-0101	Stud (Note 4)
50	J048714	Pin, 1-1/4 LR elastic stop (4)
51	M144627-002	Pin, 7/16 (Note 4)
52	M451354-0201	Latch block (Note 4)

REF.	PART NO.	DESCRIPTION
53	M144204-001	Cover (Note 4)
54	M451354-0501	Latch block (Note 4)
55	M410529	Spring (Note 4)
56	M451354-0301	Staple (Note 4)
57	N451354-0403	Hasp, complete (Note 4)
58	M451354-0402	Hasp (Note 5)
59	M451354-0401	Nut latch (Note 5)
60	M216596-001	Pin (Note 5)
61	N380686	Packing, torch wick (Note 4)
62	M094096-001	Washer (Note 4)
63	J475138-0115	Washer, 1/2 steel spring (Note 4)
64	J047008	Gasket, leather (Note 4)
65	M238336	Spring clip (Note 4)

Notes
(3) Refer to "SIGNAL UNITS - OPERATIVE" on page 2 for top part numbers. Refer to tabulation below for parts breakdown.
(4) Included under Ref. 47 part number
(5) Included under Ref. 57 part number.

OPERATIVE UNIT (See Figure 2 on page 6)

REF.	PART NO.	DESCRIPTION
1	J079351	Seal, lead
2	N213282	Coupler, plug
3	J070214	Body, plug coupler (Note 1)
4	M328970	Contact, spring (Note 1)
5	M118364	Post, terminal (Note 1)
6	M213267	Connector (Note 1)
7	J047818	Washer (Note 1)
8	J480300	Nut, 14-24 hex, brass (Note 1)
9	J048300	Nut, molded (Note 1)
10	M141688	Post, terminal (Note 1)
11	M213371	Receptacle (Note 1)
12	N213263	Retaining spring, complete
13	N413965	Right roundel, green
	N413946	Right roundel, red
	N413966	Right roundel, yellow
	N413967	Right roundel, lunar white
14	--	Middle roundel (Note 2)
15	--	Left roundel (Note 2)
16	M333006	Case, plastic
17	N169547	Cover, complete
18	M169546	Cover (Note 3)
19	M143663	Stud (Note 3)
20	M167997	Adapter (Note 3)
21	M344559	Machine screw (Note 3)
22	M344566	Washer, lock (Note 3)
23	N148169	Reflector assembly, complete
24	N149107	Reflector subassembly (Note 4)
25	M436848	Reflector (Note 5)
26	M149106	Holder (Note 5)
27	J047303	Gasket, molded rubber (Note 5)
28	M149095	Roundel ring (Note 5)
29	M410563	Clip (Note 5)
30	M149104	Coil spring (Note 5)
31	N214304	Lamp socket (Note 5)
32	M103818	Nut (Note 5)
33	M001515	Nut (Note 5)
34	J052665	Screw, 4 x 1/4 rnd. hd. (Note 5)
34A	N216668	Flexible lead (Note 5)
35	M151300	Washer (Note 5)
36	M106871	Washer (Note 5)
37	N109360	Bracket, mounting (Note 5)
38	N216646	Shield (Note 5)
39	J051665	Screw, 10-32 x 5/16 rnd, hd. (5)
40	J047733	Washer, #10 lock (Note 5)
41	M149105	Stud (Note 5)
42	J047681	Washer, #8 lock (Note 5)
43	N145174	Retaining ring (Note 4)
44	M144021	Ring (Note 6)
45	M410531	Spring (Note 6)
46	J053606	Glass (Note 6)
47	M146718	Lens (Note 6)
48	J052665	Screw (Note 6)
49	J047052	Gasket (Note 6)

REF.	PART NO.	DESCRIPTION
50	M208900	Nut
51	M029353	Lock nut
52	N320312	Terminal board
53	J053745	Lens, clear plano-convex
54	M153231	Screw
55	M054713	Lock bolt
56	M169544	Lens ring
57	J063888	Instruction plate
58	J047120	Gasket, felt
59	N237234	Cover glass
60	M334551	Spacer
61	M237221	Strip
62	M237220	Locking plate
63	M240902	Gasket
64	J070595	Arrester, carborundum
65	M410561	Connector plate
66	J051299	Screw, 10-32 x 5/16 fil. hd.
67	J052355	Screw, 10-32 x 1/2 fil. hd.
68	M291449	Screw
69	J051664	Screw, 10-32 x 1/4 rnd. hd. brass
70	M291572	Screw
71	J052075	Screw, 8-36 x 15/16 fil. hd.
72	J051615	Screw, 4-48 x 1/4 rnd. hd. brass
73	M291450	Screw
74	M315679	Magnet
75	M315920	Clip
76	M437061-001	Bolt, carriage
77	J048143	Nut, 10-32 elastic stop
78	J047146	Gasket, rubber
79	M330411	Washer, rubber
80	M049593	Washer
81	J525029	Screw, 2 x 1/8 rnd. hd.
82	N290146	DC Op. Unit, 5.5 V, 250 ohm (Note 7)
	N294130	DC Op. Unit, 8.0 V, 500 ohm (Note 7)
83		Variable resistor (Note 8)
	M109385	Capac. = 2.5 A, total res. = 1 ohm, min. res. = 0.04 ohm
	M109386	Capac. = 1.7 A, total res. = 2 ohms, min. res. = 0.04 ohm
	M109387	Capac. = 1.1 A, total res. = 5 ohms, min. res. = 0.1 ohm
	M109388	Capac. = 0.75 ohms, total res. = 10 ohms, min. res. = 0.19 ohm

Notes
(1) Included under Ref. 2 part number.
(2) Same part number per each color as Ref. 13
(3) Included under Ref. 17 part number.
(4) Included under Ref. 23 part number.
(5) Included under Ref. 24 part number.
(6) Included under Ref. 43 part number.
(7) Refer to tabulation on p. 7 for parts breakdown.
(8) Optional part; not included under top part. no.

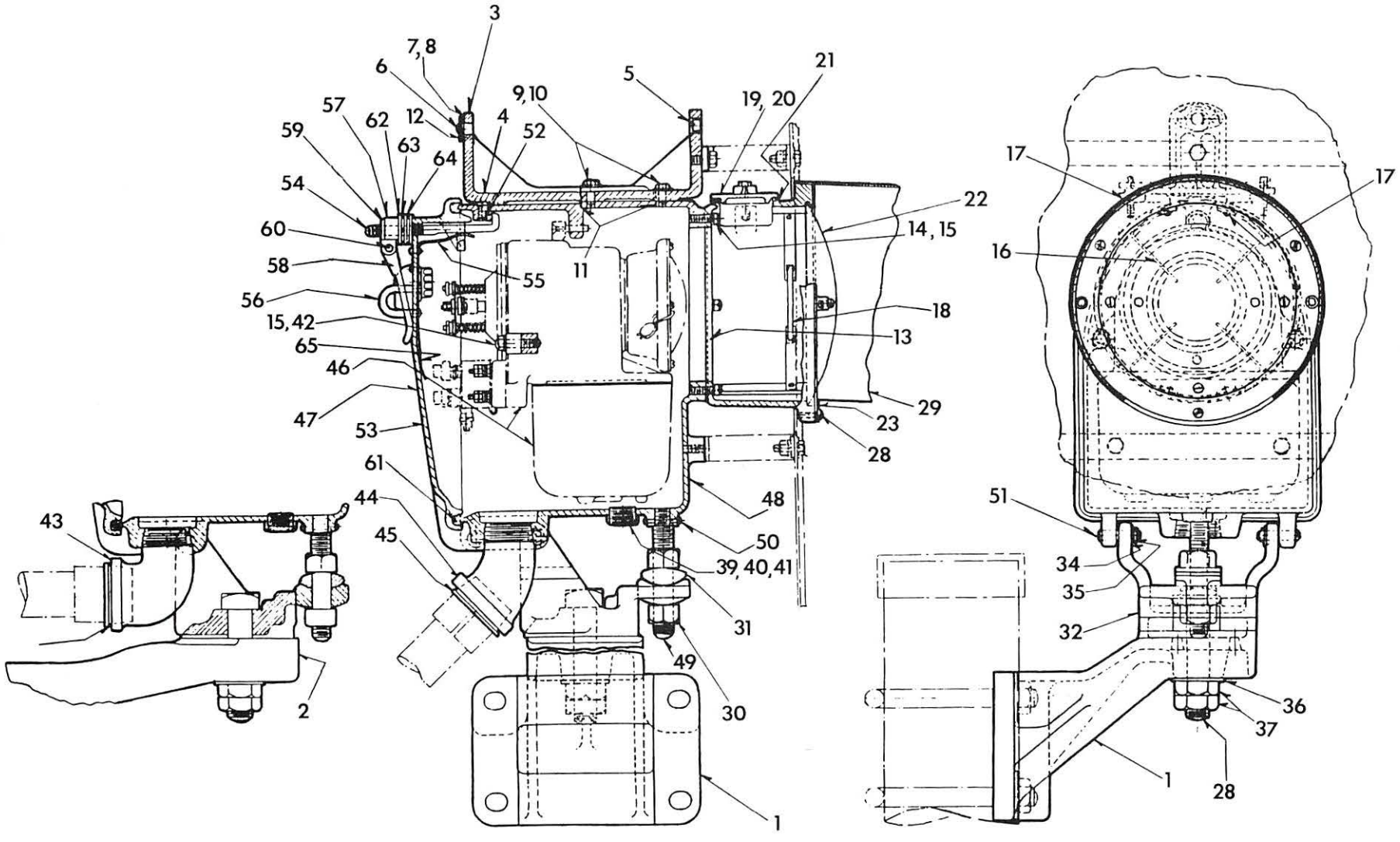

Figure 1. Signal Case Assembly

UNION SWITCH & SIGNAL

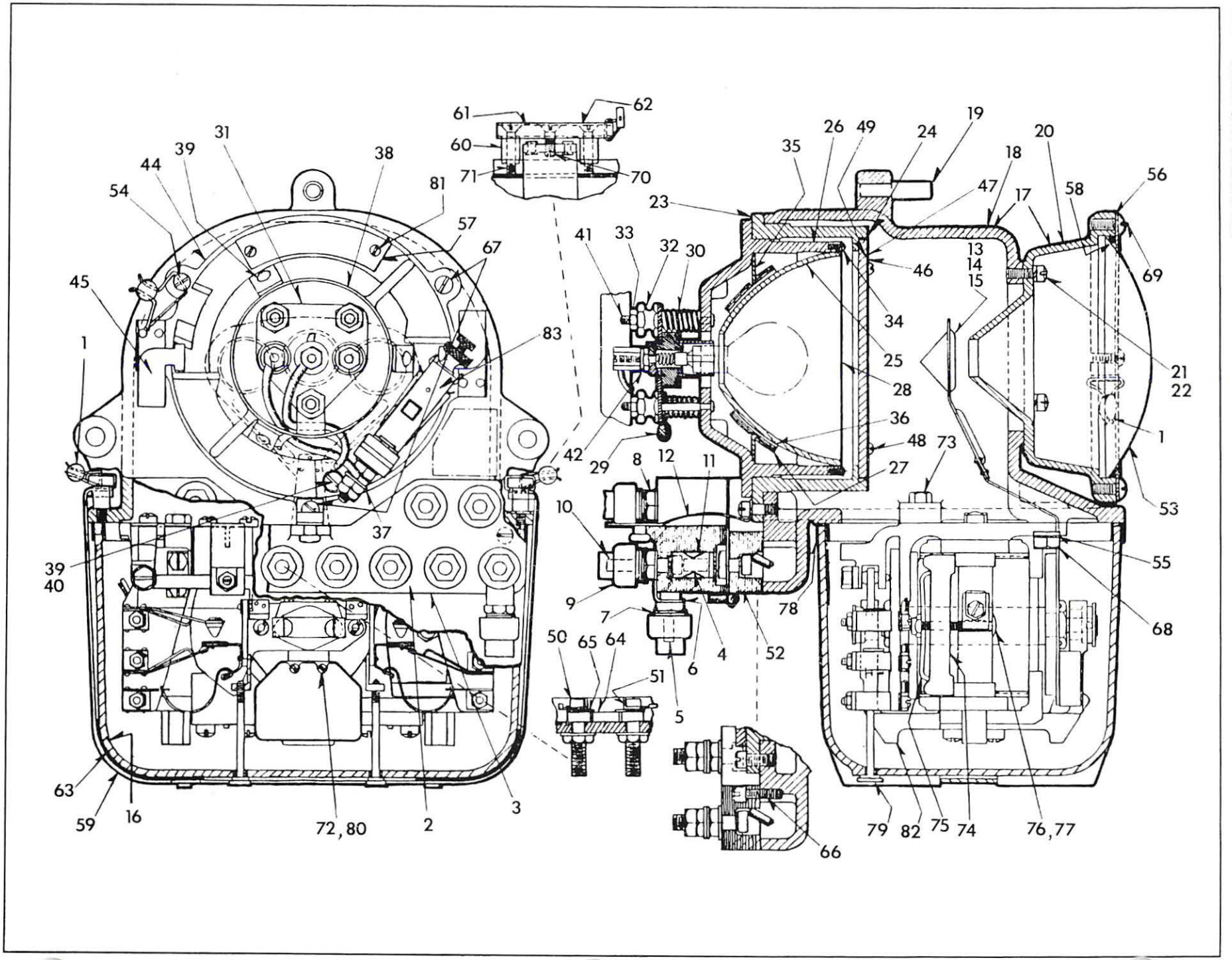

Figure 2. Operative Unit Assembly

DC OPERATING UNIT (See Figure 4 on page 8)

REF.	PART NO.	DESCRIPTION
1	N166446	Magnet assembly, complete
2	M166628	Spacer (Note 1)
3	M141663	Lower backstrap (Note 1)
4	M141662	Backstrap (Note 1)
5	M141670	Pole piece (Note 1)
6	M142528	Pole piece (Note 1)
7	J052322	Screw, 14-24 x 1/2 fil. hd. (Note 1)
8	M291451	Screw (Note 1)
9	M166987	Stud (Note 1)
10	J052327	Screw, 14-24 x 1 fil. hd. (Note 1)
11	M166988	Pole piece (Note 1)
12	M141676	Coil spacer (Note 1)
13	M141711	Armature bracket
14	M141709	Left hand bracket
15	M141710	Bracket
16	M174174	Armature, complete
17	N141718	Spectacle (Note 2)
18	M223548	Spectacle head (Note 3)
19	M141717	Spectacle arm (Note 3)
20	M410389	Clip (Note 3)
21	M410391	Clip (Note 3)
22	M410390	Clip (Note 3)
23	N410386	Double clip, complete (Note 3)
24	J048831	Pin, 20 x 1/4 brass esc. (Note 3)
25	M314669	Plate (Note 3)
26	N169022	Armature (Note 2)
27	M141673	Pole piece (Note 2)
28	M141674	Pole piece (Note 2)
29	M141714	Shaft, roller (Note 2)
30	M332441	Roller (Note 2)
31	M141720	Pins (Note 2)
32	M141713	Nut (Note 2)
33	M329984	Counterweight (Note 2)
33A	J332442	Pin (Note 2)
34	M320065	Counterweight
35	M157891	Nut, lock
36	J050788	Screw, 10-32 x 3/8, hex
37	N391661	Board, spring contact
38	N391662	Board, spring contact
39	J077725	Board, molded terminal (Note 4)
40	N391671	Contact spring (Note 4)
41	N391670	Contact spring (Note 4)

REF.	PART NO.	DESCRIPTION
42	N391668	Connector (Note 4)
43	M017376	Washer (Note 4)
44	M029353	Lock nut (Note 4)
45	M029956	Nut (Note 4)
46	N142078	Lead (Note 4)
47	M155958	Screw (Note 4)
48	N391665	Arm and anvil
49	M208900	Nut
50	M321513	Nut, lock
51	M141675	Nut
52	M141698	Screw
53	M160992	Nut, lock
54	M160993	Nut, lock
55	M178520	Insulation
56	N191779	Bearing
57	J790039	Cap, bearing
58	M057496	Pin
59	M119318	Screw
60	M176319	Pin
61	M037409	Pin
62	M332443	Pivot screw
63	M074798	Bolt, lock
64	M169192	Washer
65	M169193	Washer
66	M169674	Washer
67	J048100	Nut, 10-32 hex, brass
68	M236708	Lock clip
69	M216532	Screw
70	M042239	Nut, lock
71	N178942	Coil, 8.0 V, 500 ohm
	N170724	Coil, 5.5 V, 250 ohm
72	J066002	Balls, 1/8 Hoffman St.
73	J051030	Screw, 8-36 x 1/2 fil. hd.
74	J052322	Screw, 14-24 x 1/2 fil. hd.
75	J052324	Screw, 14-24 x 5/8 fil. hd.
76	M398622	Nut, lock

Notes
(1) Included under Ref. 1 part number.
(2) Included under Ref. 16 part number.
(3) Included under Ref. 17 part number.
(4) Included under Refs. 38 and 39 part numbers.

INOPERATIVE SIGNAL UNIT (See Figure 3 below)

REF.	PART NO.	DESCRIPTION
1	N169547	Cover, comp. (Note 1)
2	N148169	Reflector, comp. (Note 2)
3	N413946	Roundel, red
	N413966	Roundel, yellow
4	J048002	Nut
5	N411175	Terminal block
6	M410289	Support (Note 3)
7	M410594	Post (Note 3)
8	J047818	Wash., 17/64 x 9/16 (3)
9	J480300	Nut, 14-24 hex brs. (3)
10	M410539	Insulation
11	J047818	Washer, 17/64 x 9/16
12	J480301	Nut, 14-24 hex brs.
13	J522019	Screw, 10-32 x 3/8 fil. hd.
14	J052300	Screw, 10-32 x 5/8 fil. hd.
15	J052200	Screw, 1/4 x 1/2 fil. hd.
16	J048172	Nut, 10-32 hex
17	N158980	Spectacle, complete
18	M223548	Spectacle (Note 4)
19	M159018	Support (Note 4)
20	M410390	Clip (Note 4)
21	N410386	Double clip (Note 4)
22	J048831	Pin, 20 x 1/4 esc. (4)
23	M044891	Washer (Note 4)
24	M159017	Plate, bottom
25	M159016	Plate, side
26	J050016	Screw, 1/4-20 x 3/4 hex
27	M169544	Lens ring
28	J052563	Screw, 10-32 x 1/4
29	J053745	Lens, clear plano-conv.
30	J079351	Seal, lead
31	J047120	Gasket, felt
32	M153231	Screw
33	J052355	Screw, 10-32 x 1/2 fil. hd.
34	J063888	Plate, instruction
35	J525029	Screw, 2 x 1/8 rnd. park.
36	--	Var. Resistor (Note 5)

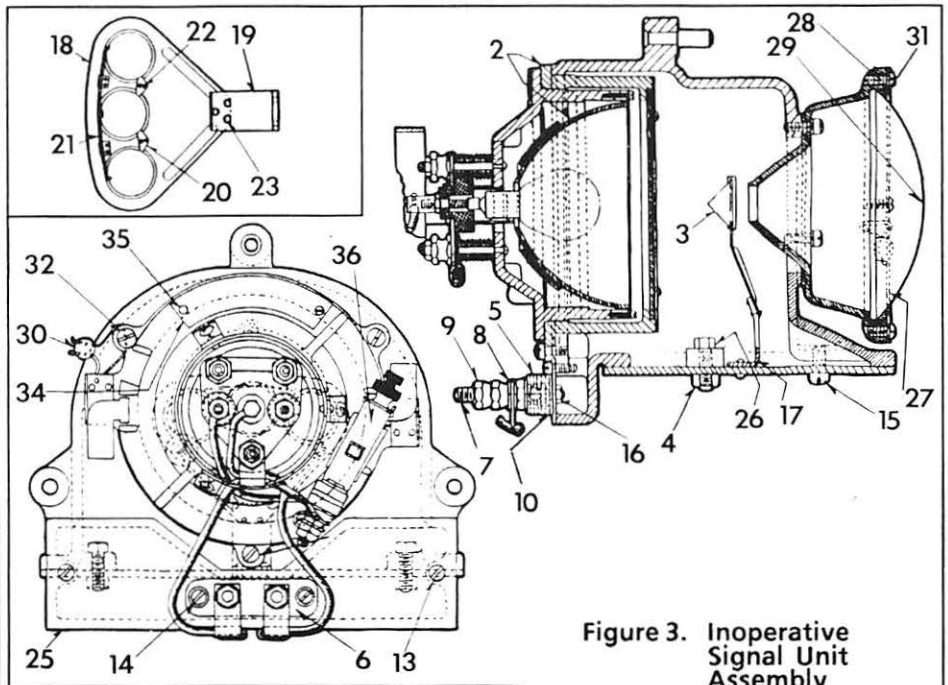

(1) Refer to Ref. 17 of "OPERATIVE UNIT".
(2) Refer to Ref. 23 of "OPERATIVE UNIT".
(3) Included under Ref. 5 part number.
(4) Included under Ref. 17 part number.
(5) Refer to Ref. 83 of "OPERATIVE UNIT"

Figure 3. Inoperative Signal Unit Assembly

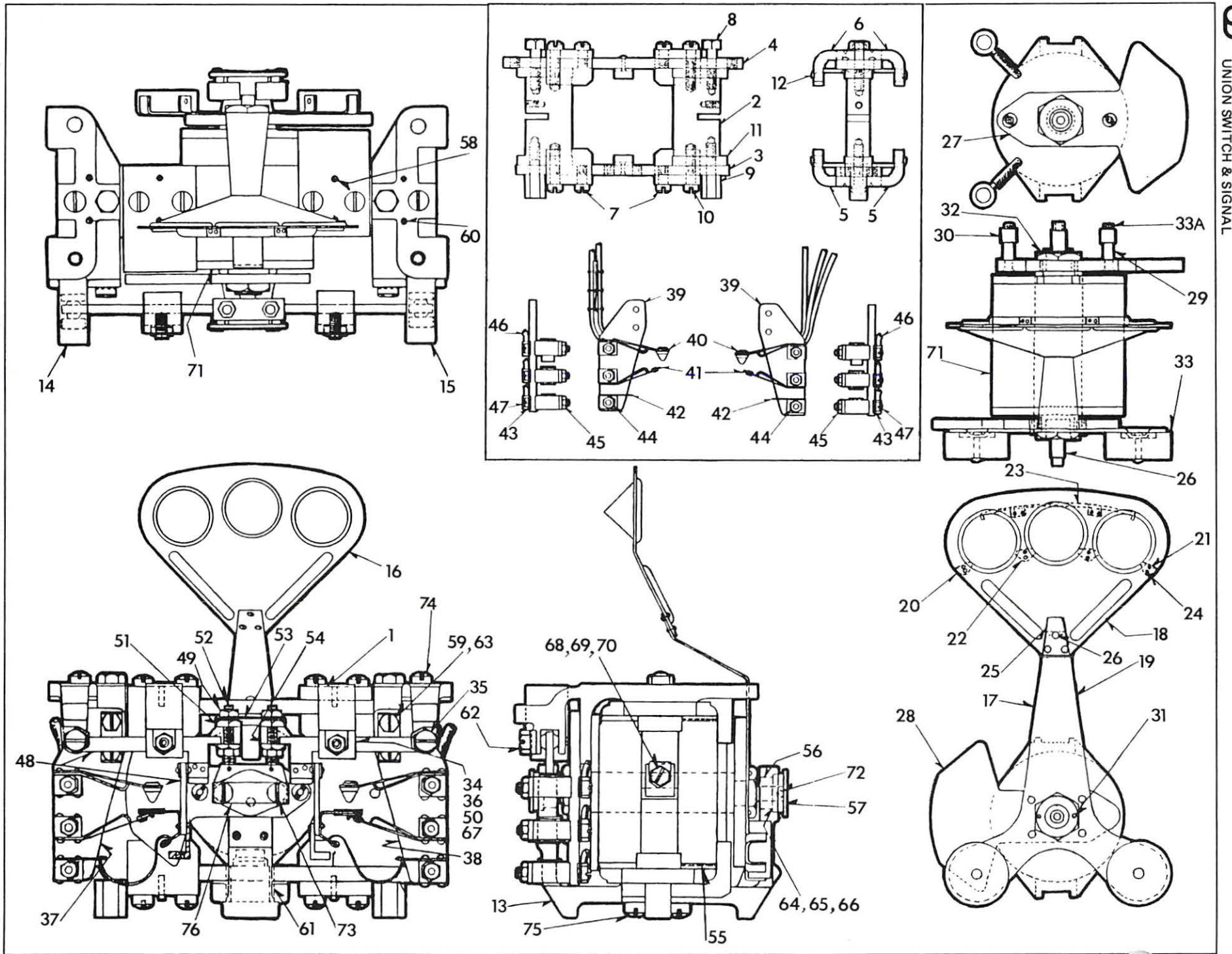

Figure 4. DC Operating Unit Assembly

R-2 COLOR LIGHT SIGNAL UNITS

The US&S R-2 Color Light Signal Unit is a highly reliable, completely weatherproof signal unit designed for displaying color light aspects. It features accurately located lamp units with a precision optical system. The signal units are available for dc operation, or with individual transformers for ac operation.

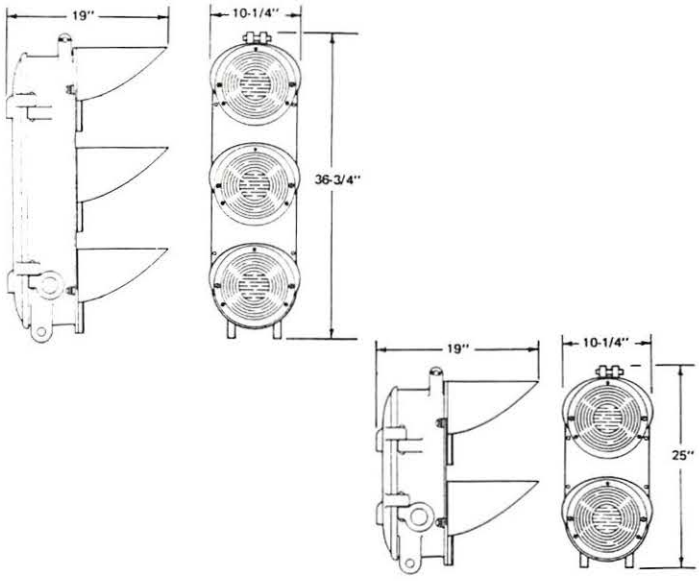

DESCRIPTION

CASE

The R2 Signal Unit case is made from aluminum and contains a hinged, weathertight door for routine access to internal components such as the lamps. The door is equipped with a hasp that permits padlocking. Screened ventilators are built into the door to provide air circulation and prevent condensation. An optional 2-inch street ell may be installed in an opening in the side of the case to guard cabling. The case is produced with two or three openings, each of which accomodates a doublet lens with lamp receptacle. A terminal block is mounted inside the case for circuit connections and lamp resistors.

OPTICAL ASSEMBLY

Each optical assembly of the R-2 Color Light Signal consists of a lamp unit and doublet lens. This assembly may be easily removed from the front of the case. The lamp unit, with attached terminals, is mounted on a bracket and affixed to the lens housing, while the lamp receptacle is accurately located so that the filament is at the focal center of the lens system. Lamps used in the R-2 Color Light Signal may include single contact candelabra base or special bayonet base. Lamps are not included with these signals at shipment. Refer to RSE-17B1 for lamp ordering information.

The doublet lens consists of a 5-1/2 inch colored back lens, and an 8-3/8 inch clear front lens. This doublet is a combination of two special stepped lenses that give a wide angle of diversion to the light beam. Standard signal units are supplied with 25° deflecting prisms. Beam patterns of 30° and 0° are also available. In addition, an inclined cover glass with phankill is also available to extend the operational capability of the R-2 signal. Refer to RSE-2F1 for details on the phankill unit. A sighting telescope is available to target the R-2 optics.

MOUNTING

The R-2 Color Light Signal Unit is designed for mounting directly on a pipe post. Any required alignment in either the horizontal or vertical planes may be achieved by changing adjustable supporting brackets (see diagram on back of this sheet). These adjustments are independent of each other. Mounting hardware must be ordered separately.

FEATURES

- All-aluminum housing.
- Available for AC or DC operation.
- Incorporates precision optical assembly.
- Complies with AAR and state requirements.
- Easy maintenance with quick-access rear door
- Large selection of lenses and special components.

HOW TO ORDER

There are two ways of ordering R-2 Color Light Signals. The first is to order from the tabulation below. This tabulation lists some of the more commonly used R-2 signal assemblies, which have top part numbers.

If these particular signals do not meet specifications, assemblies can also be ordered by using the flow chart on the back of this sheet. Follow this chart and record all required design features in the order.

Mounting hardware for the R-2 Signal is not included with the shipment and must be ordered separately. Use the diagram and parts list on the next page for this purpose.

Note also the sighting telescope listed at the bottom of the tabulation. This part number includes the scope and all required hardware to temporarily mount it on the signal assembly. For detailed parts listing on the R-2 signal, request manual SM-5011.

	DESCRIPTION				
PART NO.	TYPE	LENSES*	VOLT.	LAMP BASE	NOTES
N451355-0102	3-Color	G, Y, R	DC	BB	1
N451355-0117	3-Color	G, Y, R	DC	CB	
N451355-0302	3-Color	G, Y, R	AC	BB	
N451355-0303	3-Color	G, Y, R	AC	CB	
N451355-0504	2-Color	Y, R	DC	BB	
N451355-0508	2-Color	Y, R	DC	CB	
N451355-0701	2-Color	Y, R	AC	BB	
N451355-0703	2-Color	R, G	AC	BB	2

* Top-to-bottom order.

G = Green
Y = Yellow
R = Red

BB = Bayonet Base
CB = Candelabra Base

NOTES 1 Has 2" pipe plug for street ell.

2 30° prism deflection. All other units in this table have 25° deflection.

SIGHTING TELESCOPE **PART NO.** N119507

COPYRIGHT 1987, US&S DIVISION OF AMERICAN STANDARD INC.

ORDERING FLOW CHART

START

SELECT
3-COLOR OR 2-COLOR SIGNAL

3-COLOR SIGNAL

SELECT SIGNAL COLORS
TOP CENTER BOTTOM
OPTIONS: RED, GREEN, YELLOW, LUNAR WHITE, CLEAR

BLANKING PLATE(S) REQUIRED?
IF SO, NOTE LOCATION(S):
TOP CENTER BOTTOM

PHANKILL(S) REQUIRED?
IF SO, GO TO RSE-2F1 AND SPECIFY TYPE.
THEN NOTE LOCATION(S):
TOP CENTER BOTTOM

2-COLOR SIGNAL

SELECT SIGNAL COLORS
TOP BOTTOM
OPTIONS: RED, GREEN, YELLOW, LUNAR WHITE, CLEAR

BLANKING PLATE REQUIRED?
IF SO, NOTE LOCATION:
TOP BOTTOM

PHANKILL(S) REQUIRED?
IF SO, GO TO RSE-2F1 AND SPECIFY TYPE.
THEN NOTE LOCATION(S):
TOP BOTTOM

A

A

SELECT RECEPTACLE TYPE FOR LAMP BASES
OPTIONS:
SINGLE CONTACT CANDELABRA
SPECIAL BAYONET

SELECT AC OR DC OPERATION

SELECT DEFLECTING PRISM ANGLE FOR ALL LIGHTS
OPTIONS:
0 DEG. 25 DEG. 30 DEG.

LAMP RESISTORS REQUIRED?
IF SO, STATE ON ORDER.

2 INCH PIPE PLUG REQUIRED FOR STREET ELL?
IF SO, STATE ON ORDER.

MOUNTING HARDWARE TO BE ORDERED ALSO?
IF SO, GO TO TABULATION BELOW

STOP

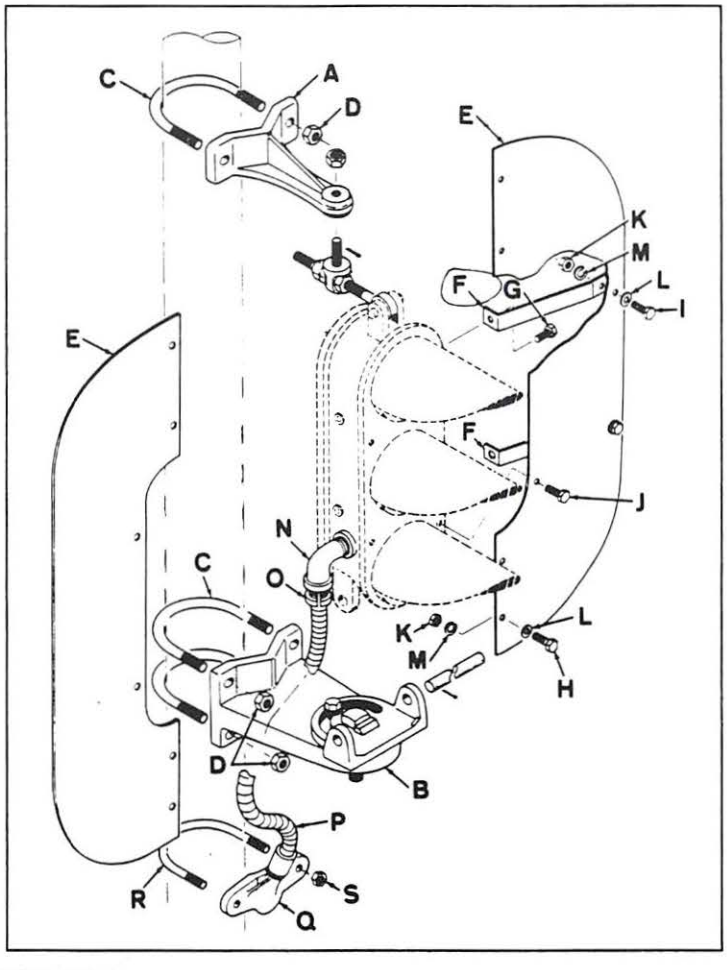

INSTALLATION / ADJUSTMENT PARTS

REF.	PART NO.	DESCRIPTION	QTYS. 2-C	QTYS. 3-C
A	N080774	Upper adjust. bracket	1	1
B	N390577	Lower adjust bracket	1	1
C	M044199-001	U-Bolt, 3/4"	3	3
D	J480210-0107	Nut, hex 3/4"	6	6
E	N142935	Background, half, 2-Color	2	--
E1	N144339	Background, half, 3-Color	--	2
F	M080822	Brace	2	4
G	J500099-0108	Capscrew, hex, 3/8" x 1/2"	2	4
H	J500099-0112	Capscrew, hex, 3/8" x 3/4"	4	4
I	J500099-0116	Capscrew, hex, 3/8" x 1"	2	4
J	J500099-0120	Capscrew, hex, 3/8" x 1-1/4"	4	4
K	J480210-0103	Nut, Hex, 3/8" - 16	10	12
L	J475132-0114	Washer, plain, 3/8"	6	8
M	J475138-0113	Washer, lock, 3/8" ex. hvy.	6	8
N	J032490	Elbow, street, 2"	1	1
O	J700747	Connector, Jake box 2"	1	1
P	M320859-015	Conduit, 2" x 31" flex. steel	1	1
Q	N451435-0202	Cable outlet	1	1
R	M375212-001	U-bolt, 1/2"	1	1
S	J480210-0105	Nut, hex 1/2"	2	2

Galvanized parts: U-bolts, nuts, capscrews, lock and plain washers, conduit.

2-C = 2-Color
3-C = 3-Color

HC-33 MARKER LIGHT SIGNAL

The HC-33 Marker Light Signal is used with color and searchlight signals to provide many different signaling combinations. These standard units are available in a wide choice of color indications, with or without close-up prisms to provide 1-color aspects.

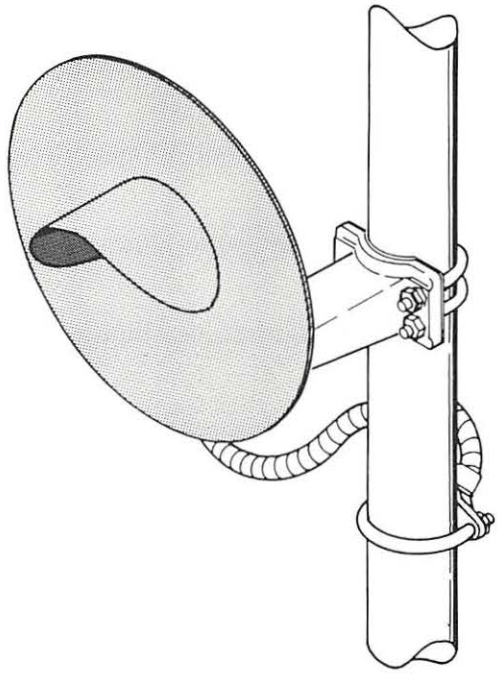

DESCRIPTION

CASE

The basic HC-33 Marker Light Signal consists of an optical assembly housed in a rugged and weatherproof aluminum case. In turn, the case is equipped with an easily removed rear door held in place with two wing nuts. The door permits routine access to all internal components such as the lamp and lamp wiring. There are also mounting bolts and provisions for lamp resistors on the case.

OPTICAL ASSEMBLY

The optical assembly of the HC-33 consists of a lamp unit and a doublet lens This assembly is easily removed from the front of the case as a unit. The lamp unit, with attached terminals, is mounted on a bracket and affixed to the back lens, while the lamp receptacle is accurately located to place the lamp filament at the center of the lens system. This signal uses a standard S-11, single-contact candelabra base lamp receptacle and a 120 volt, 25 watt lamp. Lamps can be replaced without making any readjustments or altering optical efficiency.

The lens assembly consists of a 5-1/2" colored back lens and a an 8-3/8" transparent front lens. This lens doublet is a special combination of two special stepped lenses that give a considerable angle of divergence. This makes the signal aspect more effective on curves than could be obtained with conventional lens systems. Light units can be obtained with or without a close-up prism.

HOOD, BACKGROUND AND BRACKETS

The HC-33 signal unit is provided a hood and background. Backgrounds are available in 35" and 20" diameters. Brackets are available for mounting the HC-33 on a standard signal assembly mast. Options include front of mast or side of mast mounting. Front of mast mounting applies only at the top of the mast to allow opening of the signal unit access door. Side mount brackets are adjustable to permit up to 10" deviation, left or right, from the center.

ADJUSTABLE LAMP RESISTORS

Adjustable lamp resistors of 1, 2 5 and 10 ohms can be provided with the signal. These resistors are placed in series with the lamp filaments to adjust the filament voltage to an optimum value. In turn, this provides proper illumination and maximum lamp life.

OPTIONAL EQUIPMENT

Three standard versions of the HC-33 are available with inclined cover glass and phankill. These items can also be installed on other versions per customer order. An optional sighting telescope is also available to properly target the signal. This device is temporarily mounted in a threaded hole in the background.

FEATURES

- Free of phantom indications.
- Efficiently used in combination with color light and searchlight signals.
- Variety of lens colors available, with or without close-up prisms.
- Complies with AAR and state requirements.
- Minimal maintenance, long service life.
- Design permits easy access to internal components.

HOW TO ORDER

To order complete HC-33 Marker Light Signal assemblies, use the simplified flow chart on the back of this sheet and record all required options. Part numbers are shown in bold face. If the configurations provided in the chart do not meet specifications, custom-made assemblies can also be ordered.

Note the three signals with inclined cover glass and phankill. These are the only versions of the HC-33 with these items as standard components. To obtain the inclined cover glass and phankill for the other versions of the signal, refer to RSE-2F1 and select the required unit(s). Consult US&S for inclined cover glass with deflection, diffusing or spreadlight prisms.

Mounting and adjustment hardware is shown and tabulated on page 3. For the detailed parts listing on the HC-33, request service manual SM-6337.

PRINTED IN USA

UNION SWITCH & SIGNAL DIVISION
AMERICAN STANDARD INC. / PITTSBURGH, PA 15237

COPYRIGHT 1987, US&S DIVISION OF AMERICAN STANDARD INC.

START

SELECT SIGNAL WITH OR WITHOUT PHANKILL AND INCLINED COVER GLASS

WITH PHANKILL AND INCLINED COVER GLASS

PART NO.	DESCRIP.
N451359-1101	W/yellow back lens.
N451359-1102	W/green back lens
N451359-1103	W/lunar white back lens

NOTE: ADDITIONAL OPTIONS SUCH AS LAMP RESISTORS NOT AVAILABLE WITH THESE PARTICULAR UNITS.

STOP

WITHOUT PHANKILL OR INCLINED COVER GLASS

SELECT SIGNAL WITH OR WITHOUT CLOSE-UP PRISM

WITH CLOSE-UP PRISM

SELECT SIGNAL WITH 20" OR 35" BACKGROUND

WITH 20" BACKGROUND

PART NO.	DESCRIP.
N451359-0401	W/red back lens.
N451359-0406	W/yellow back lens
N451359-0416	W/clear back lens
N451359-0421	W/white back lens

A

WITH 35" BACKGROUND

PART NO.	DESCRIP.
N451359-0601	W/red back lens.
N451359-0606	W/yellow back lens
N451359-0611	W/green back lens

A

WITHOUT CLOSE-UP PRISM

NOTE: ALL SIGNALS IN THIS GROUP INCLUDE 20" BACKGROUND

PART NO.	DESCRIP.
N451359-0436	W/red back lens.
N451359-0446	W/green back lens
N451359-0451	W/clear back lens

A

A

ADJUSTABLE LAMP RESISTOR REQUIRED?

NO

YES

NOTE PART NO. SELECTED TO THIS POINT

EXAMPLE: **N451359-0601**

SELECT OHMS VALUE OF ADJUSTABLE RESISTOR:

1 OHM	5 OHMS
2 OHMS	10 OHMS

IF THE 1 OHM RESISTOR IS SELECTED, ADD **1** TO THE PART NUMBER FOR THE SIGNAL:

EXAMPLE: **N451359-0601**
+1
N451359-0602

THESE ARE THE NUMBERS TO BE ADDED FOR THE OTHER RESISTORS:

IF THE RES. VALUE IS:	ADD THIS TO THE PART NO.
2 OHM	2
5 OHM	3
10 OHM	4

THIS SUM IS THE FINAL PART NUMBER OF THE SIGNAL WITH THE LAMP RESISTOR INCLUDED

SELECT LAMP:

PART NO.	DESCRIP.
J071463	10 V, 18 W
J071574	10 V, 25 W
J714054	120 V, 25 W

STOP

INSTALLATION /ADJUSTMENT PARTS

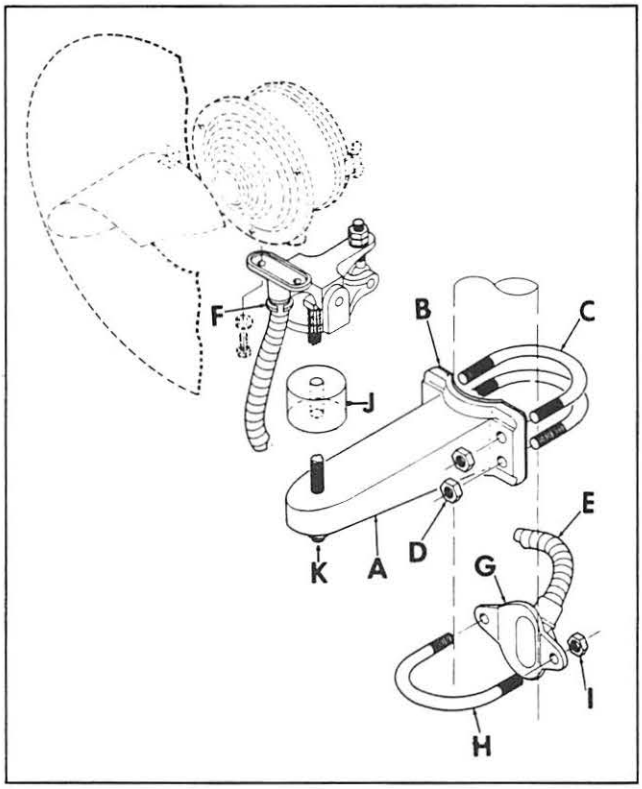

REF.	PART NO.	DESCRIPTION
A	N451354-0901	Bracket, supporting, for front-of-mast mounting. (Note: If using on aluminum mast, order bracket alone. If using on steel mast, order shims (item B) also.)
A	N451354-0902	Bracket, supporting, for side-of-mast mounting. (Note: If using on aluminum mast, order bracket alone. If using on steel mast, order shims (item B) also.)
B	M451195-4202	Shim, for mounting of bracket (item A) on steel mast (2 required for each bracket).
C	M044199-001	U-bolt, 3/4" galvanized (2 required).
D	J480210-0107	Nut, hex 3/4", galvanized (4 required)
E	M320856-016	Conduit, 3/4" flexible galvanized, for front-of-mast mounting.*
E	M320856-010	Conduit, 3/4" flexible galvanized, for side-of-mast mounting.*
F	J070969	Connector, jake box, 3/4"
G	N386132	Cable outlet, for steel mast.
G	N451435-0203	Cable outlet, for aluminum mast.
H	M046567-001	U-bolt, 1/2", for steel mast.
H	M375212-001	U-bolt, 1/2" galvanized, for aluminum mast.
I	J048013	Nut, hex, 1/2" cadmium plated, for steel mast (2 required).
I	J480210-0105	Nut, hex, 1/2" galvanized, for aluminum mast (2 required).
J	M377583-001	Spacer, for front-of-mast mounting.
J	M379660-001	Spacer, for side-of-mast mounting.
K	J466074-0164	Bolt, 1" - 8 x 8 square head, for front-of-mast mounting.
K	J466074-0156	Bolt, 1" - 8 x 7 square head, for side-of-mast mounting.

* Notes: Instead of using flexible steel conduit from the mast to the HC-33 Marker Light, rubber-covered cable may be run direct to the light with squeeze connectors at the mast outlet and the entrance to the light. If this is done, omit conduit (Ref. E) and connector (Ref. F) and order the following connections, sizes as required:

PART NO.	QTY.	DESCRIPTION
J701011	2	Size 3/4" Crouse-Hinds Type CGB294 straight connector, for 3/8" to 1/2" diameter cable.
J070526	2	Size 3/4" Crouse-Hinds Type CGB295 straight connector, for 1/2" to 5/8" diameter cable.
J070596**	2	Size 1" Crouse-Hinds Type CGB295 straight connector, for 5/8" to 3/4" diameter cable.

**If using this connector, omit shim (Ref. B) and order supporting bracket N451354-0903 (not in above tabulation). Also, omit cable outlet (Ref. G) and order cable outlet N392059.

If 3/4" "sealtight" conduit is to be used instead of the 3/4" flexible steel conduit, omit conduit (Ref. E) and connector (Ref. F) and order the following fittings and connections:

PART NO.	QTY.	DESCRIPTION
J323097	2	Size 3/4" T & B straight liquid-tight fittings.
A069811	1	American Brass "sealtight" flexible liquid-tight conduit, 30" long for side-mounted signal and 52" long for front-mounted signal.

MISCELLANEOUS PARTS

REPLACEMENT BACKGROUND/ HOOD UNIT

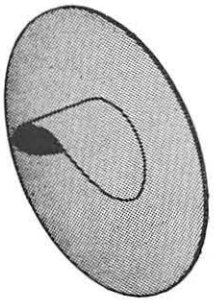

PART NO.	DESCRIPTION
N151058	35" background with hood
N154813	20" background with hood

SIGHTING TELESCOPE	N156952

TRANSIT SIGNAL ASSEMBLIES

US&S offers complete transit signal assemblies for above or below ground applications. These assemblies meet AAR requirements and are ruggedly designed to provide long service life. All assemblies are shipped complete with the required signal light units and installation hardware. These signal assemblies can be configured in many different ways to meet the customer's specific applications.

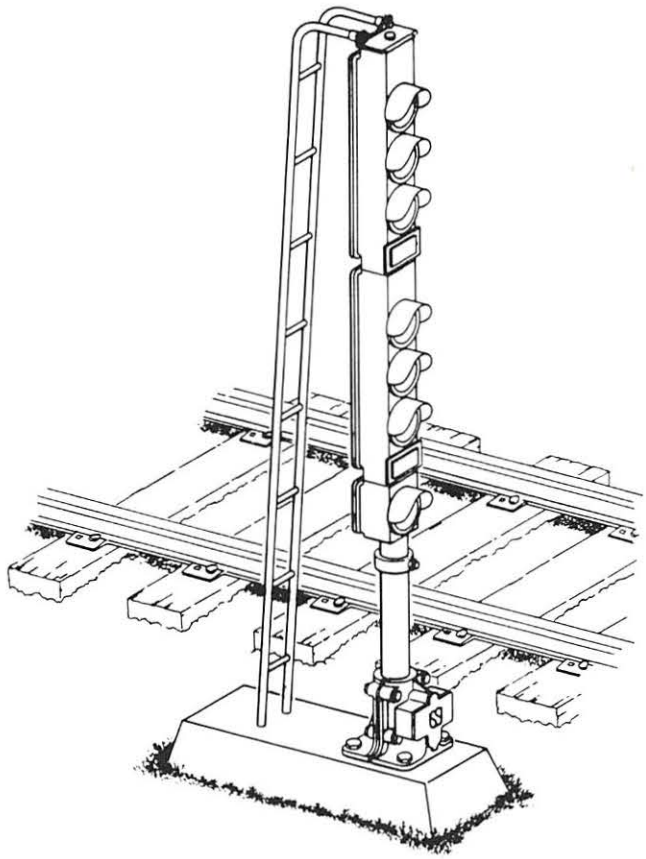

DESCRIPTION

Transit Signal Assemblies are modular in design to allow development of many different configurations. A typical assembly may consist of a junction box base, pipe post, mounting collar, signal unit, end plate and ladder (see figures on page 2).

Signal unit options include 1-color or 3-color type, indoor or outdoor, with glass or plastic lenses in several choices of colors, hoods of 4", 7-1/2" and 9" reach, and a transformer or resistor lamp circuit. One-color signals may be stacked in sets with any desired number of units, and with some units facing opposite the others. Three-color signal units may also be stacked and alternated, or put in combination with 1-color units. Signal lamp options include single or dual element with four different choices of electrical specifications. Several number plates are available with "TRK" or "DE" standard inscriptions. Others can be ordered with customer-specified inscriptions. (Refer to RSE-2E2 for detailed descriptions of individual signal units.)

Mast type assemblies use 4" aluminum pipe, which is cut to length per customer order. These masts are typically mounted on a concrete foundation, using a junction box base. Signal units can also be directly mounted on a foundation using a foundation base. A right angle bracket is available for wall mounting of a signal unit, while a special wrap-around clamp bracket permits attachment to a girder or support column. Elbow brackets are available for ceiling mounting of the signal unit. A pedestal base is also provided for equipment case (top) mounting of the assembly.

Mast or case-mounted assemblies may be accessed for maintenance using a ladder, which attaches to the top of the assembly with an end plate. A 2-stage ladder assembly can be provided for case mounted assemblies.

FEATURES

- Corrosion-resistant aluminum components for long service life.
- Wide variety of options and configurations provides design flexibility.
- Brackets and hardware available for mast, foundation, case, wall, ceiling or girder mounting of signal units.
- Signals may be stacked, mixed and reversed as required.
- Signals available with numerous optical and electrical options.
- Standard or customer-specified number plates available.
- Easily installed ladder permits easy access to all parts of mast or case-mounted assemblies.

PRINTED IN USA

UNION SWITCH & SIGNAL DIVISION
AMERICAN STANDARD INC. / PITTSBURGH, PA 15237

COPYRIGHT 1986, US&S DIVISION OF AMERICAN STANDARD INC.

A

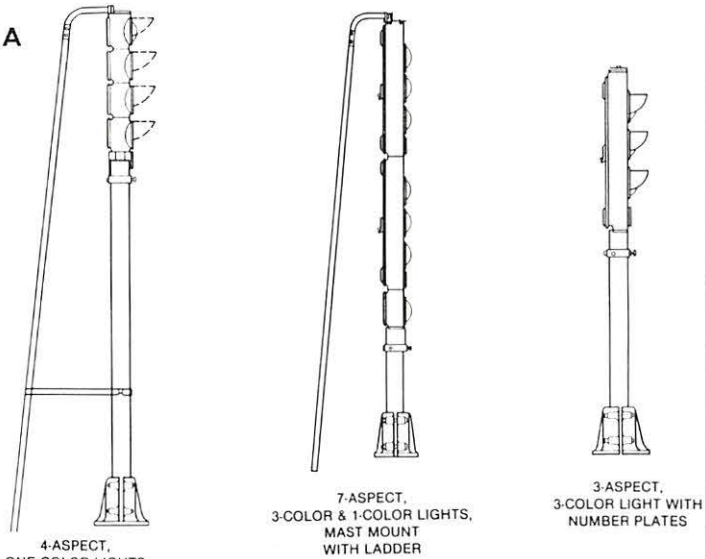

TYPICAL MAST MOUNTED SIGNAL ASSEMBLIES

C

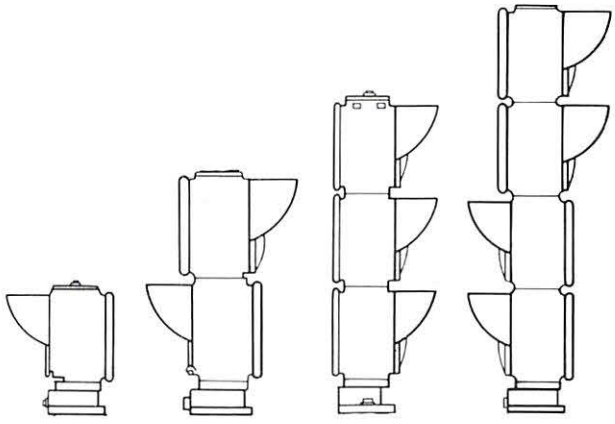

TYPICAL ARRANGEMENTS OF 1-COLOR SIGNALS

B

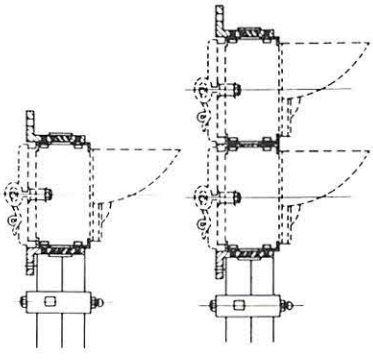

1-COLOR SIGNAL UNITS

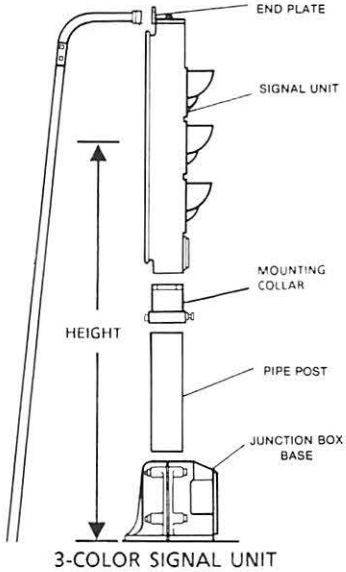

3-COLOR SIGNAL UNIT

MAST MOUNTING DETAILS

D

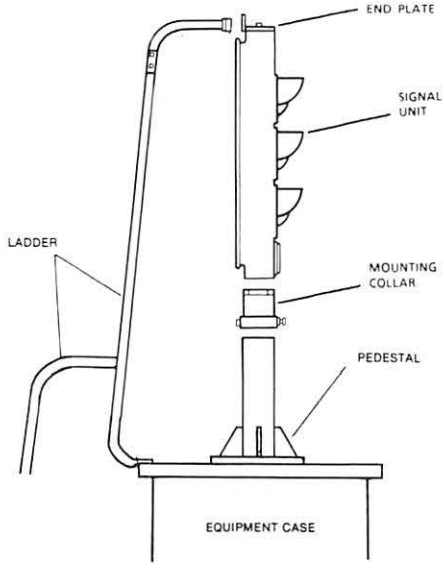

TYPICAL CASE MOUNTING

E

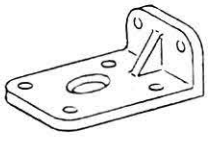

WALL MOUNTING
BRACKET

F

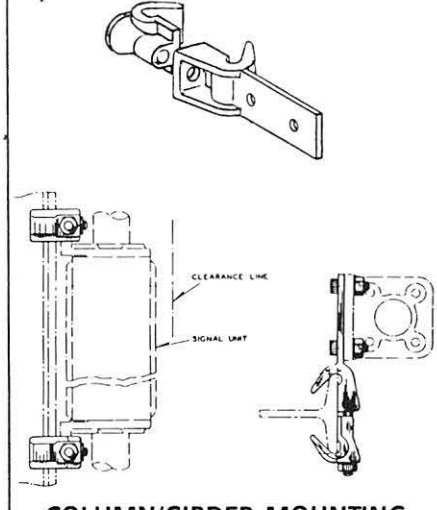

COLUMN/GIRDER MOUNTING

G

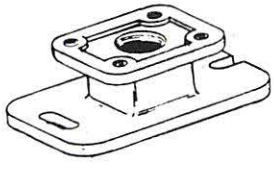

FOUNDATION
MOUNTING
BASE

H

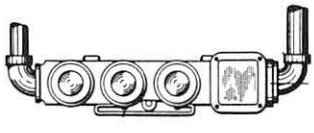

OVERHEAD
MOUNTING

HOW TO ORDER

Use the flow chart below to order complete transit signal assemblies. The chart is arranged with mounting options listed left-to-right, and subassembly options listed top-to-bottom. All part numbers are shown in bold face. Part numbers for mounting hardware (where available) are included with the major subassemblies. Note that some subassemblies do not have standard part numbers and must be special ordered. Once the basic mounting configuration is developed, refer to RSE-2E2 for ordering of the 1 and 3-color signal units and special components.

Refer to the figures on page 2 for illustrations of these subassemblies.

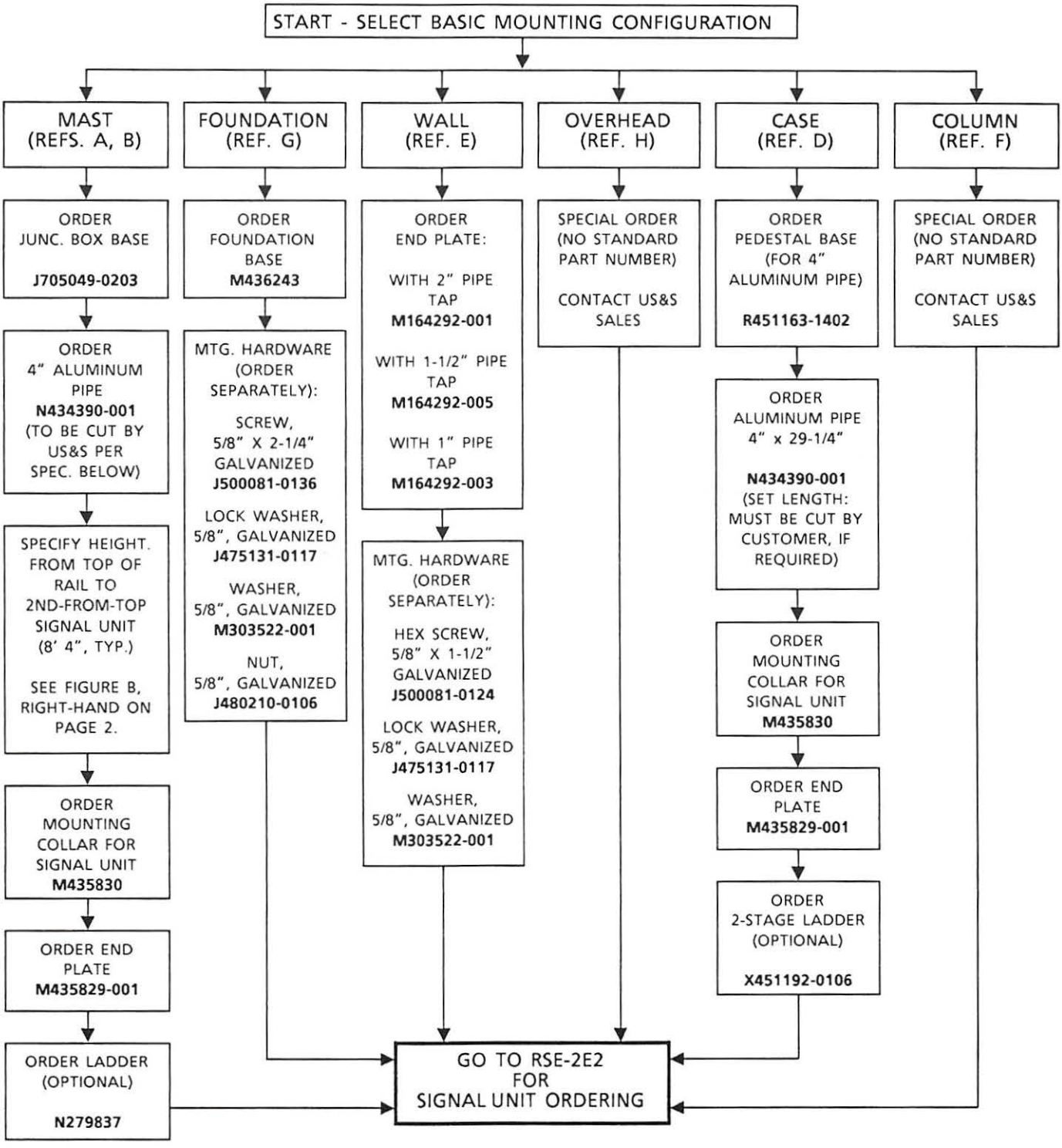

TRANSIT COLOR LIGHT SIGNAL UNITS

US&S's Transit Color Light Signals are designed for dependable service in many different system configurations. One and three-color units are available for indoor or outdoor use. Each is supported with a full selection of lens colors and materials and numerous lamp options. The outdoor units may be equipped with three different sizes of hoods and two different types of lamp control circuits. All signal units may be equipped back or side indicator lights and standard or customized number plates.

DESCRIPTION

The 1-color outdoor and indoor transit signals are housed in weatherproof aluminum cases with hinged rear access door, and have provision for optics with attached lamp receptacle. Cases are available with back and/or side indication lights. The door on both versions is equipped with built-in screen ventilator to provide air circulation and prevent condensation. A terminal block is mounted inside the case for convenient connection of electrical power. The signal indication compartment on the outdoor model has a provision for mounting a transformer, when used with ac power.

The 3-color outdoor and indoor transit signals also use a weatherproof aluminum case, however these are equipped with three sets of optics (each with attached lamp receptacle), multiple screen ventilators and terminal blocks. As with the 1-color outdoor model, the 3-color model can be equipped with a transformer for ac power. Back and/or side indication lights are also available on these units. The 3-color signal case is baffled to prevent light from one unit spilling into an adjacent unit and possibly confusing the indication. For safety and ease of maintenance, the door on the 3-color units can be held open in the 90° position when changing lamps or otherwise servicing the unit. The number plate is an integral part of the case and can be illuminated or enamel-coated.

The optical assembly on the 1-color outdoor transit signal consists of a lamp unit and a doublet lens. The outer lens of the doublet has a diameter of 6-3/8", while the inner lens has a diameter of 5-1/2". Lenses may be glass or plastic. On the 1-color indoor unit, the optical assembly consists of a single lens light unit with a diameter of 5 inches. The 1-color indoor unit is only available with a glass lens.

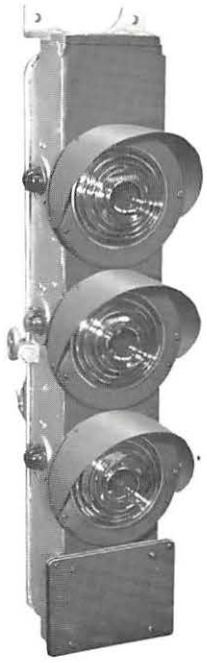

TYPICAL 3-COLOR OUTDOOR UNIT (FRONT)

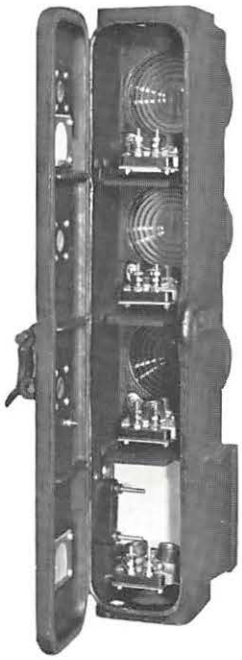

TYPICAL 3-COLOR INDOOR UNIT (REAR)

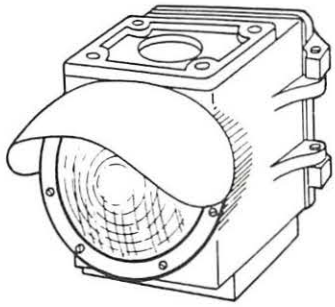

1-COLOR OUTDOOR UNIT

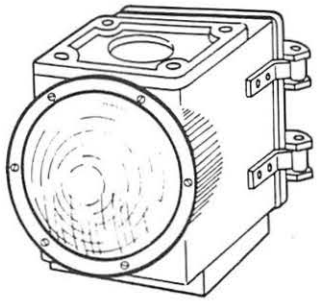

1-COLOR INDOOR UNIT

On both versions, the lamp unit contains one or two lamp receptacles (depending on the unit) mounted on a bracket and affixed to the back lens. The lamp receptacle is accurately located so that the lamp filament is at the focal center of the lens system. Lamp base options include S-11 single-contact candelabra base, special medium screw base and bayonet base types.

The 3-color outdoor and indoor signals are equipped with three lamp assemblies of the same type used in the respective 1-color models.

COPYRIGHT 1986, US&S DIVISION OF AMERICAN STANDARD INC.

All US&S transit color light signals may be mounted on a mast, case top, girder or column, wall or directly to a foundation. Several signals can be stacked to provide additional aspects. This includes combinations of 1 and 3-color units. Signals can also be stacked facing the same direction or opposite directions. Refer to catalog RSE-2E1 for ordering of complete signal assemblies.

The 1 and 3-color indoor signals are specially designed for use in tight tunnel areas where the larger 6-3/8" doublet lens cannot be used. The 1 and 3-color outdoor signals can be also be used indoors (underground), space permitting.

FEATURES

- Utilizes precision optics for maximum light output.
- Rugged aluminum case has access door to speed maintenance.
- Complies with AAR and state requirements.
- Highly adaptable to different configurations.
- Mounts on mast, case, wall, ceiling, girder or foundation.
- Many component options available.
- No realignment necessary when replacing lamps.

TRANSIT COLOR LIGHT ASSEMBLY DETAILS

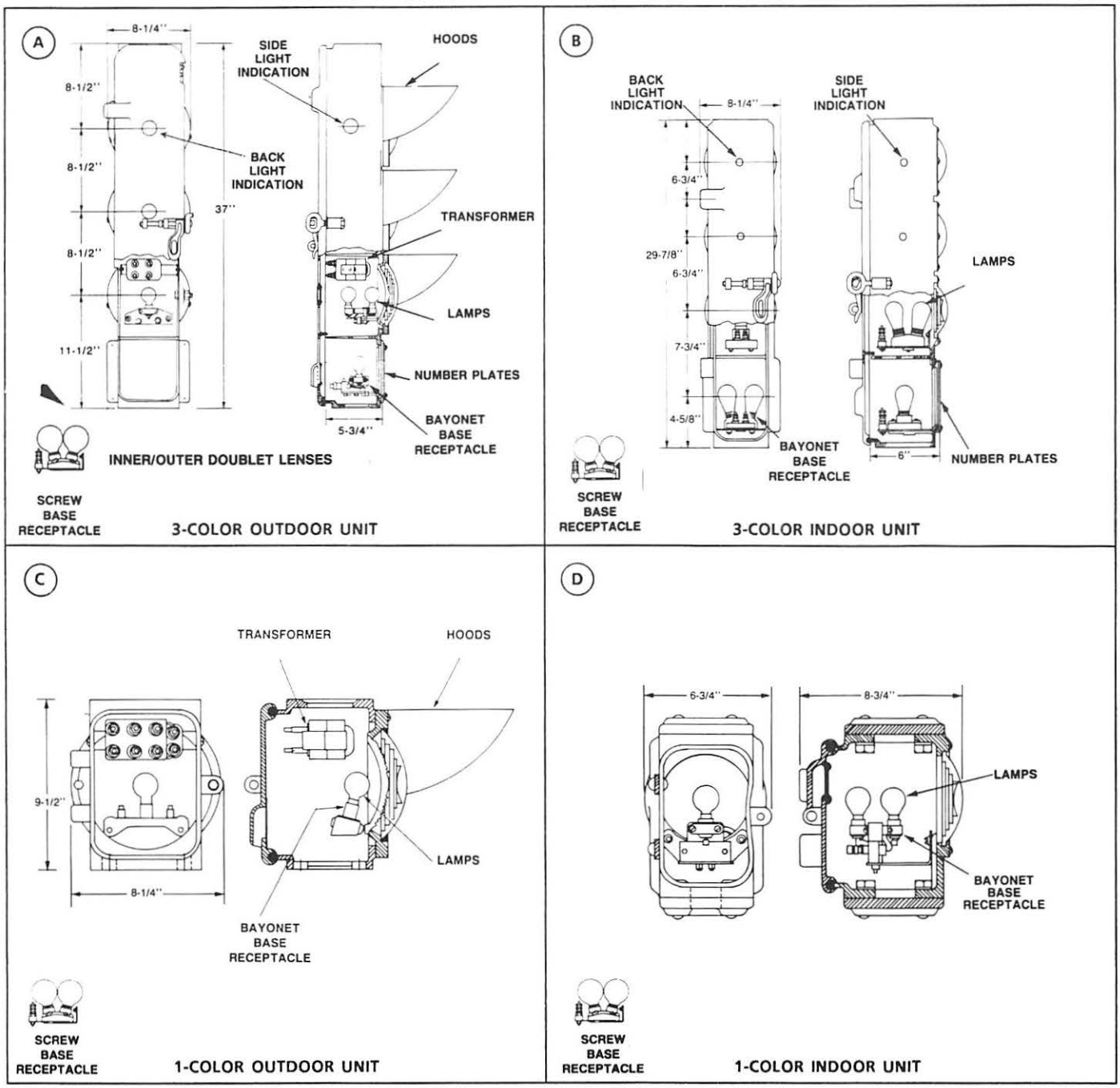

HOW TO ORDER

Use the flow chart below to order complete transit color light signal units. The chart is arranged with basic unit options listed left-to-right, and subassembly options listed top-to-bottom.

All part numbers are shown in bold face. Repeat this procedure for each additional unit ordered. Refer to the figures on page 2 for illustrations of these assemblies.

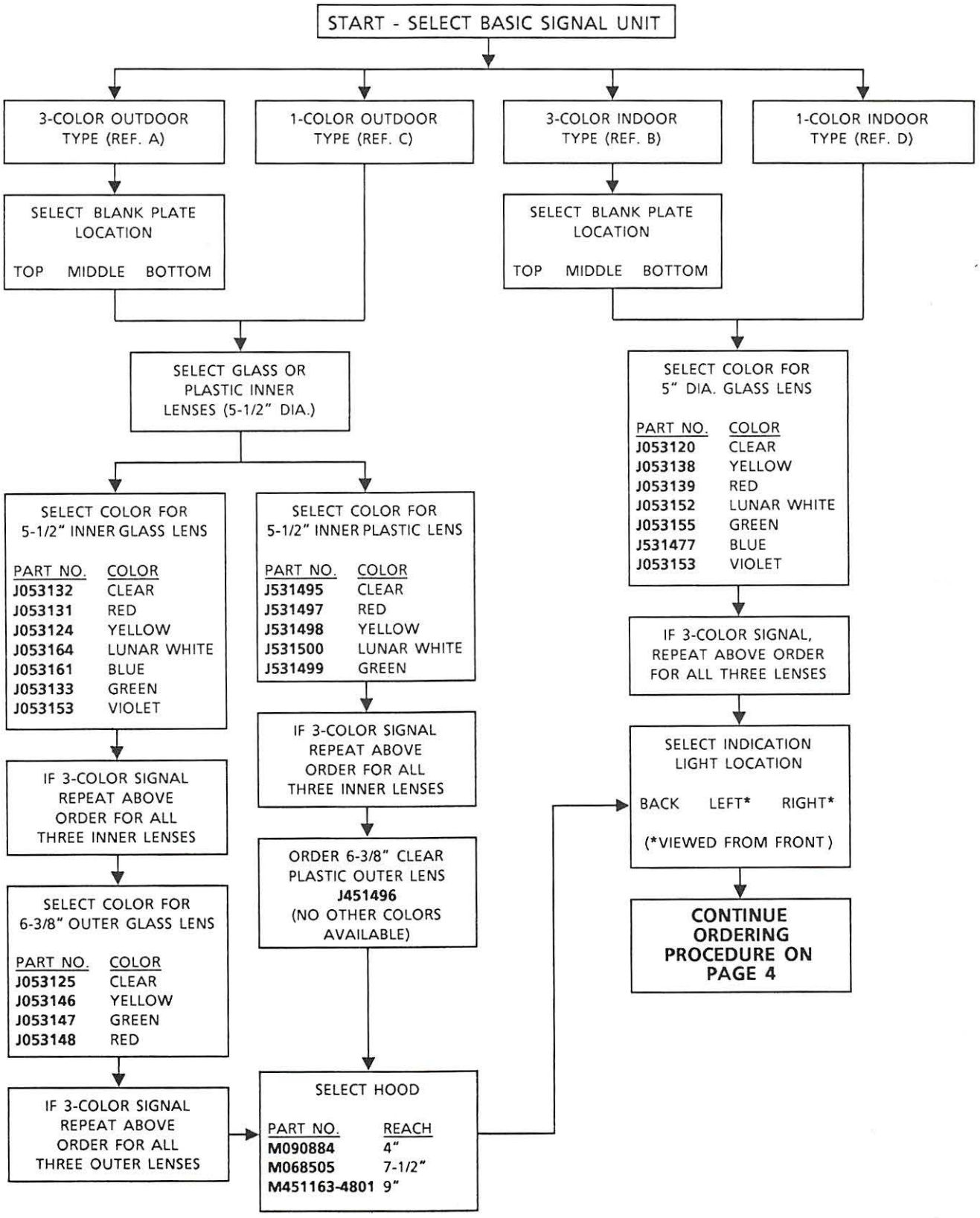

ORDERING PROCEDURE CONTINUED FROM PAGE 3

SELECT TRANSFORMER OR RESISTOR LAMP CONTROL

SELECT TRANSFORMER

PART NO.	DESCRIP.
N451039-3101	SINGLE SECOND. 110/10 V, 60 VA
N451039-3102	SINGLE SECOND. 110/10 V, 10 VA
N437093-001	MULTI-TAP SEC., 110/6-10 V, 60 VA

NOTE: TRANSFORMER SUPPLIED SEPARATELY WHEN ORDERED WITH 1-COLOR OR INDOOR SIGNALS. REQUIRES JUNCTION BOX.

SELECT RESISTOR

PART NO.	DESCRIP.
N150318	1 OHM
N144909	2 OHM
N144910	5 OHM
N149880	10 OHM

NOTE: RESISTOR SUPPLIED SEPARATELY WHEN ORDERED WITH 1-COLOR OR INDOOR SIGNALS. REQUIRES JUNCTION BOX.

SELECT SINGLE OR DUAL ELEMENT SIGNAL LAMPS

SELECT SINGLE-ELEMENT SIGNAL LAMP

PART NO.	DESCRIP.
J714287	30 VOLTS 15 WATTS MED. S.C. BASE
J071463	10 VOLTS 18 WATTS S.C.B.C BASE
*	12.8 VOLTS 18 WATTS S.C.B.C BASE
J071629	10 VOLTS 5 WATTS S.C.B.C BASE

*Order by G.E. #1141

SELECT SINGLE-ELEMENT SIGNAL LAMP

PART NO.	DESCRIP.
J071656	10 VOLTS 13/3.5 WATTS S.C.B.C BASE
J071613	11 VOLTS 11 WATTS S.C.B.C BASE
J714168	10 VOLTS 11 WATTS S.C.B.C BASE
J071574	10 VOLTS 25 WATTS S.C.B.C BASE

A

A

SELECT STANDARD OR CUSTOMIZED NUMBER PLATE INSCRIPTION

SELECT STANDARD NUMBER PLATE INSCRIPTION

5-1/4" X 6-1/2" STENCIL TYPE FOR BACK ILLUMINATION ON SIGNAL (ENAMELED NOT AVAILABLE)

PART NO.	DESCRIP.
N451163-0401	"TRK"
N451163-0701	"DE"

INDICATE CUSTOMIZED NUMBER PLATE INSCRIPTION

SELECT CUSTOMIZED NUMBER PLATE TYPE

PART NO.	DESCRIP.
J790678	ENAMELED
J63045-001	ILLUMINATED

INDICATE NUMBER PLATE MOUNTING

ON SIGNAL ON MAST*

*SPECIAL BRACKET REQUIRED: CONTACT US&S

SELECT STENCIL LENS

PART NO.	DESCRIP.
J535006-0024	YELLOW ARROW
J535006-0025	GREEN "R"
M438901	BAR
M451436-0801	"T"
M438900	TRANSPARENT SHIELD

IF ADDITIONAL SIGNAL UNITS ARE REQUIRED, GO TO PAGE 3 AND REPEAT PROCEDURE

END OF ORDERING PROCEDURE

M-3, M-23A and M-23B ELECTRIC SWITCH MACHINES

The M-3, M-23A and M-23B Electric Switch Machines are rugged, reliable, time-proven units designed for applications where electric power is available. The M-23A and M-23B units have dual control features, including a hand-throw lever to permit operation by on-site trainmen or maintainers, as well as by remote controlled power. The M-3 Switch Machine is recommended for applications where there is seldom a need to manually operate the switch. All three machines are available with a variety of operating speeds and motor voltages.

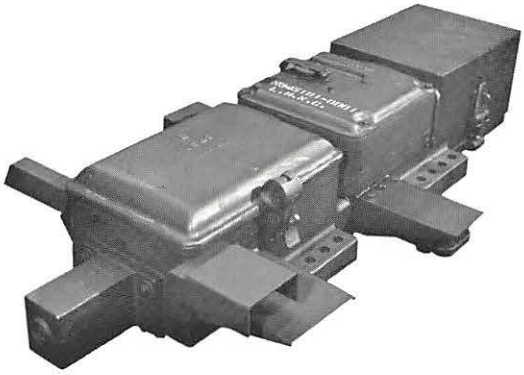

GENERAL DESCRIPTION

The M-3, M-23A and M-23B Electric Switch Machines basically consist of a motor, a gear train, a cam arrangement (for operating the switch and locking) and a circuit controller that includes a point detector (with latch device). All these machines use the same basic casting, and are interchangeable with respect to mounting and connections in a switch layout. However, the M-23A and M-23B machines require a somewhat higher clearance than the M-3. The M-3 Switch Machine can be operated by hand (i.e. in an emergency) by inserting a temporary crank.

The M-23A uses a different hand-throw pinion than the M-23B, which affects hand-throw locking. Power operation is the same with both machines. In the M-23A, the hand throw lever gives the same mechanism stroke and full lock rod protection as the power operated mode. In the M-23B, however, the lever does not provide lock-rod protection (slide bar and lock box do not move full stroke).

All of these switch machines are wired at the factory, with internal wiring connected to a main teminal board in the motor compartment. A typical wiring diagram or working drawing is enclosed with each shipped machine, to show how external connections should be made to the main terminal board for a particular application.

MOTORS AND GEAR TRAIN

The M-3, M-23A and M-23B Electric Switch Machines all use a totally enclosed, permanent magnet motor. This type of motor provides lower inductance, better EMI immunity and higher efficiency than previous wound field motors, and incorporate simpler 3-wire control. (Permanent magnet motors are also available for retrofitting older models of these switch machines; refer to ordering tabulations in this catalog.)

The gear train in the M-3, M-23A and M-23B Switch Machines is comprised of a pinion on the end of the motor shaft, one or two reduction gears, clutch gear, friction clutch, worm shaft and worm gear. Three different gear ratios are used to provide three operating speeds.

CIRCUIT CONTROLLER

The Circuit Controller used in the M-3, M-23A and M-23B switch machines has four pairs of contacts. Two are wired internally a motor control contacts. The remaining are indication contacts for external switch position determination. To allow standardized wiring, provision is made to always have certain contacts as normal, regardless of which end of the operating stroke is designated as normal.

DUAL CONTROL OPERATION

Dual control, either hand operated or power operated, is available with the M-23A and M-23B Switch Machines. A manual selector lever, located beside the hand lever, permits selection by the trainman at the time of operation.

FEATURES

- Meets applicable AAR requirements.
- Locks switch points in switch position.
- Adaptable to right or left-hand layout.
- Available with different operating speeds.
- Permanent magnet motor offers low inductance, EMI immunity, 3-wire control, high efficiency.
- Dual-operation with M-23A and M-23B - Remote controlled electric or on-site hand lever.
- All machines interchangeable.
- Friction clutch - protects mechanism from shock at end of stroke, or when obstruction is present.

PRINTED IN USA

UNION SWITCH & SIGNAL DIVISION
AMERICAN STANDARD INC. / PITTSBURGH, PA 15237

COPYRIGHT 1986, US&S DIVISION OF AMERICAN STANDARD INC

RSE-3A1
REV. 10/86

HOW TO ORDER

To order an M-3, M-23A or M-23B switch machine, refer to the "Configuration Guide" below. The Guide gives all of the design and operating options available among the three machines. Each option is identified with a letter. These letters appear in the part number tabulations for each machine. Motor voltage, operating speed and gear ratio are also included in the part tabulations.

Select the switch machine (according to part number) with the desired options. If ordering complete switch, movable point frog, derail layouts and fittings such as operating rods, front rods, lock rods, etc., refer to instructions on page 4 of this catalog. Note in the tabulations that part numbers of the old switch machines with wound field motors are given for cross reference only.

CONFIGURATION GUIDE

REF.	OPTIONS	REF.	OPTIONS
A	One 15 watt heater in circuit controller.	J	Two 15 watt, 24 V heaters. One in circuit controller, one in motor.
B	Two 15 watt, 115 V heaters. One in circuit controller, one in motor.	K	Flag type terminals.
C	Machined mounting lugs.	L	No drain plugs in crankcase cover.
D	Two 15 watt, 115/230 V heaters. One in circuit controller, one in motor.	M	No latch for manual reset.
E	Clutch set to 14 amps.	N	Five wire control.
F	Terminal board in junction box.	O	Three wire control.
G	Circuit controller without point detector latch.	P	Telephone jack in circuit controller compartment.
H	Ventilators in circuit controller compartment.	Q	Thermostat in motor compartment.
I	Two 15 watt, 230 V heaters. One in circuit controller, one in motor.	R	Switch for heater.

PART NUMBERS - M3 SWITCH MACHINES

NEW MACHINE PART NO.		OLD MACHINE PART NO.		CONFIGURATION			
L. H.	R. H.	L. H.	R. H.	MOTOR	SPEED	GEAR	REF.
N451160-0302	N451160-0301	N330555-0001	N330555	20 Vdc	26 sec.	528 : 1	A, K, N
N451160-0304	N451160-0303	N345101-0001	N345101	110 Vdc	4.5 sec.	189 : 1	A, K, N
N451160-0306	N451160-0305	N437914-0001	N437914	110 Vdc	4.5 sec.	189 : 1	B, C, N
N451160-0308	N451160-0307	N438500-0001	N438500	110 Vdc	4.5 sec.	189 : 1	B, O
N451160-0309	N451160-0310	N438510-0001	N438510	110 Vdc	4.5 sec.	189 : 1	D, N
N451160-0311	N451160-0312	N438587-0001	N438587	110 Vdc	4.5 sec.	189 : 1	B, C, O
N451160-0314	N451160-0313	N438642-0001	N438642	110 Vdc	4.5 sec.	189 : 1	L, O
N451160-0316	N451160-0315	N438868-0001	N438869	110 Vdc	4.5 sec.	189 : 1	B, M, O

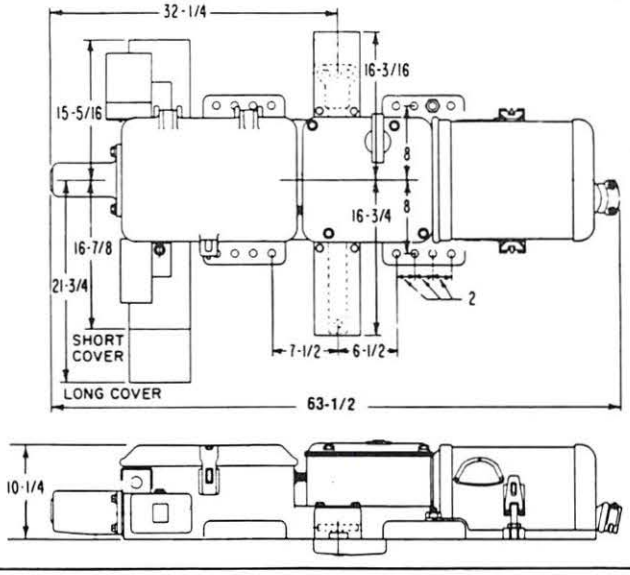

Figure 1. M-3 Switch Machine Dimensions

NOTE: For complete detail parts and additional information, request service manual SM-6263.

PART NUMBERS - M23A SWITCH MACHINES

NEW MACHINE PART NO.		OLD MACHINE PART NO.		CONFIGURATION			
L. H.	R. H.	L. H.	R. H.	MOTOR	SPEED	GEAR	REF.
N451160-0501	N451160-0502	N320310-005	N320310-006	20 Vdc	15 sec.	360 : 1	C, N
N451160-0506	N451160-0503	N320514-003	N320514	20 Vdc	26 sec.	528 : 1	N
N451160-0505	N451160-0504	N320514-002	N320514-001	20 Vdc	26 sec.	528 : 1	C, F, E, N
N451160-0508	N451160-0507	N328499	N328498	20 Vdc	15 sec.	360 : 1	N
N451160-0509	--	N328499-001	--	20 Vdc	15 sec.	360 : 1	B, N
N451160-0511	N451160-0510	N381743-001	N381743	110 Vdc	4.5 sec.	189 : 1	B, N
N451160-0513	N451160-0512	N398218-001	N398218	20 Vdc	26 sec.	528 : 1	G, N
--	N451160-0514	--	N399387-002	110 Vdc	4.5 sec.	189 : 1	C, N
N451160-0516	N451160-0515	N436131-0001	N436131	20 Vdc	26 sec.	528 : 1	I, N
N451160-0517	N451160-0518	N438240	N438240-0001	20 Vdc	26 sec.	528 : 1	C, N
N451160-0519	N451160-0520	N399387	N399387-001	110 Vdc	4.5 sec.	189 : 1	H, N
N451160-0522	N451160-0521	--	--	20 Vdc	26 sec.	528 : 1	B, N
N451160-0524	N451160-0523	--	--	110 Vdc	4.5 sec.	189 : 1	O, B, P, Q
N451160-0526	N451160-0525	--	--	20 Vdc	15 sec.	360 : 1	N, P, J
N451160-0528	N451160-0527	--	--	110 Vdc	4.5 sec.	189 : 1	N, R, B

PART NUMBERS - M23B SWITCH MACHINES

NEW MACHINE PART NO.		OLD MACHINE PART NO.		CONFIGURATION			
L. H.	R. H.	L. H.	R. H.	MOTOR	SPEED	GEAR	REF.
N451160-0602	N451160-0601	N321365-001	N321365	20 Vdc	15 sec.	360 : 1	D, N
N451160-0603	N451160-0604	N321366	N321366-001	20 Vdc	26 sec.	528 : 1	N
N451160-0606	N451160-0605	N323862-001	N323862	20 Vdc	15 sec.	360 : 1	N
N451160-0607	N451160-0608	N321366-002	N321366-003	20 Vdc	26 sec.	528 : 1	B, N
N451160-0609	N451160-0610	N388786	N388786-001	110 Vdc	4.5 sec.	189 : 1	N
N451160-0612	N451160-0611	N394803-001	N394803	110 Vdc	4.5 sec.	189 : 1	B, N
N451160-0616	N451160-0613	N436595-0001	N436595	110 Vdc	4.5 sec.	189 : 1	A, K, N
N451160-0614	N451160-0615	N438177	N438177-0001	20 Vdc	26 sec.	528 : 1	J, N
N451160-0619	N451160-0620	--	--	110 Vdc	4.5 sec.	189 : 1	J, N
N451160-0617	--	N394803-002	--	110 Vdc	4.5 sec.	189 : 1	B, N
N451160-0618	--	N321365-002	--	20 Vdc	15 sec.	360 : 1	B, N

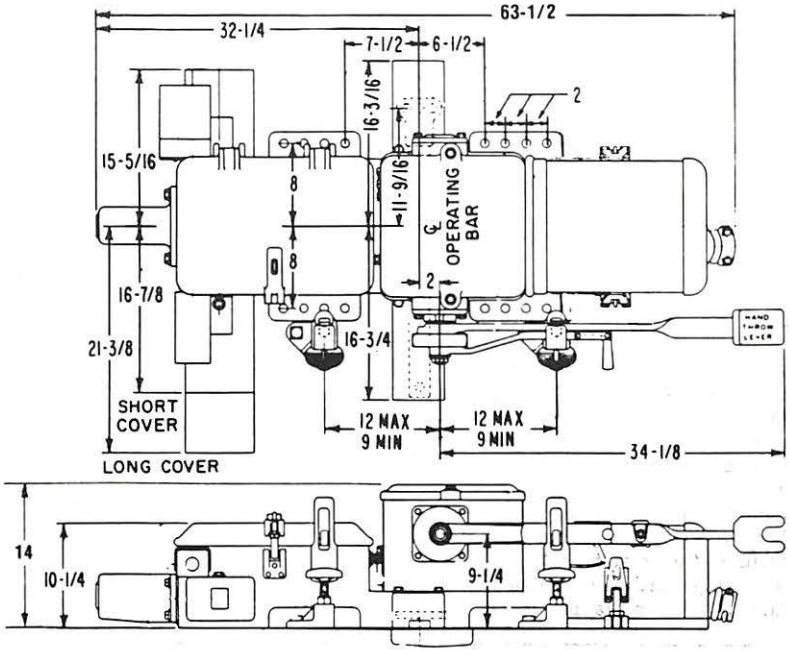

Figure 2. M-23A, M-23B Switch Machine Dimensions

NOTE: For complete detail parts and additional information, request service manual SM-6263.

M-3, M23A AND M-23B SWITCH MACHINE LAYOUTS - HOW TO ORDER

Figures 3 and 4 below show typical layouts for the M-3, M-23A and M-23B Switch Machines. Use these diagrams when placing orders for complete switch, movable point frog, derail layouts and fittings such as operating rods, front rods, lock rods, etc. Include in the order the following information:

1. Track plan showing:
   a. Weight and section of rail
   b. Length of switch rail.
   c. Switch point dimensions U-V-W-X-Y-Z and sizes of holes T (see Figure 5).
   d. Cross section of ties, giving face and depth. Plan should show spacing of ties and dimension from end of point to edge of point tie.
   e. Dimension S distance of switch mechanism from gage (see Figures 3 or 4).
   f. Distance P between center of switch rod and end of switch point (see Figures 3 or 4).
2. Plan showing design and dimensions of rail braces, switch rods and rail clips (furnished by the customer).
3. Plan showing design and dimensions of gage, riser and butt plates if furnished by the customer. If US&S is to supply these items, the items will include insulated butt joint and AAR standard riser and butt plates.
4. Right-hand or left-hand layout
5. Part number of desired switch machine and any accessories or options.

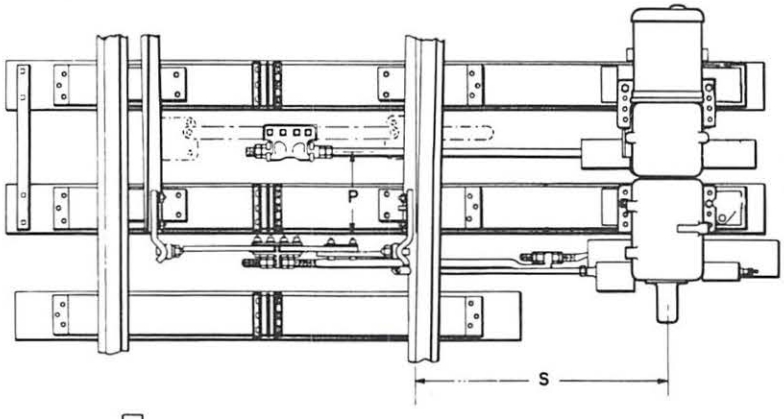

Figure 3. M-3 Switch Machine Typical Layout

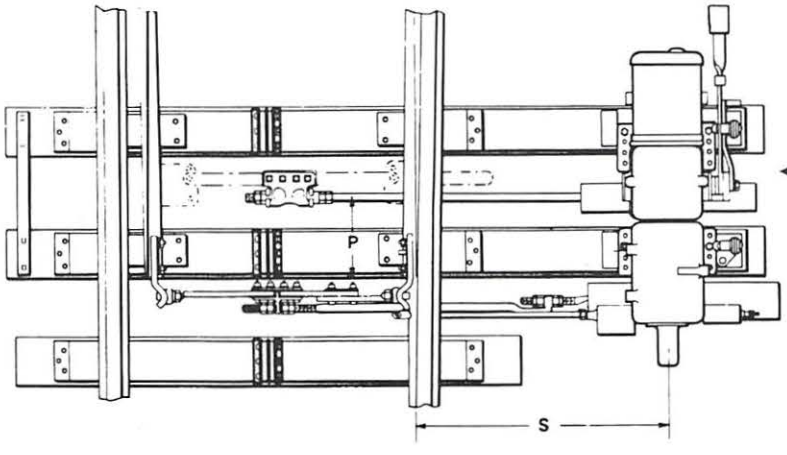

Figure 4. M-23A, M-23B Switch Machine Typical Layout

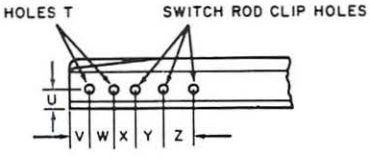

Figure 5. Switch Point Dimensions

RETROFIT MOTOR (PERMANENT MAGNET TYPE) FOR OLD STYLE MACHINES

The tabulation at the right lists part numbers of permanent magnet motor kits designed to retrofit old style M-3, M-23A and M-23B switch machines. The kits are selected according to the motor voltage and gear ratio of the existing machine. They include the motor, all required mounting hardware, wiring leads and instruction manual.

KIT PART NO.	APPLICATION	OLD MOTOR PART NO.
X451160-1101	Voltage: 110 Vdc, Gear Ratio: 189 : 1	N306349
X451160-1102	Voltage: 20 Vdc, Gear Ratio: 360 : 1	N150293
X451160-1103	Voltage: 20 Vdc, Gear Ratio: 528 : 1	N150293

T-20 AND T-21 HAND-OPERATED SWITCH MACHINES

US&S's T-20 and T-21 hand-operated switch machines are typically used where facing lock protection is required to help safeguard the movement of high speed mainline traffic over a switch. These machines are simple in design and positive in operation. They may be applied to single or crossover switches.

DESCRIPTION

The T-20 and T-21 Switch Machines use a rack and escapement type mechanism and each is equipped with a circuit controller. The complete operating mechanism is enclosed in a rugged cast iron case with a lockable cover. "T-20" is the basic hand-operated switch machine, while the "T-21" is a T-20 equipped with a target staff.

These switch machines contain a lock bar which, with the switch in the normal position, enters a notch in the lock rod. This arrangement locks the switch points in their normal position to provide facing-point lock protection. In addition, the escapement crank mechanism is configured so that the driving system itself locks the switch in either extreme position.

Three basic types of circuit controllers are available with the T-20 or T-21 Switch Machines, including standard, standard with reverse point detection and heavy duty. These contain up to four normally open or closed contacts which are operated jointly by the lock rod and the point detector bar. The contacts indicate whether the switch is in the proper position for facing point moves. In the standard controller equipped for reverse point detection, the reverse detector device contains four additional pairs of contacts that indicate switch points in the reverse direction.

The T-20 and T-21 Switch Machines may be used in right or left-hand layouts. Although the machines are externally configured for left or right layouts, all parts are interchangeable to allow conversion to the opposite layout. Pertinent mounting dimensions are shown in the figure below.

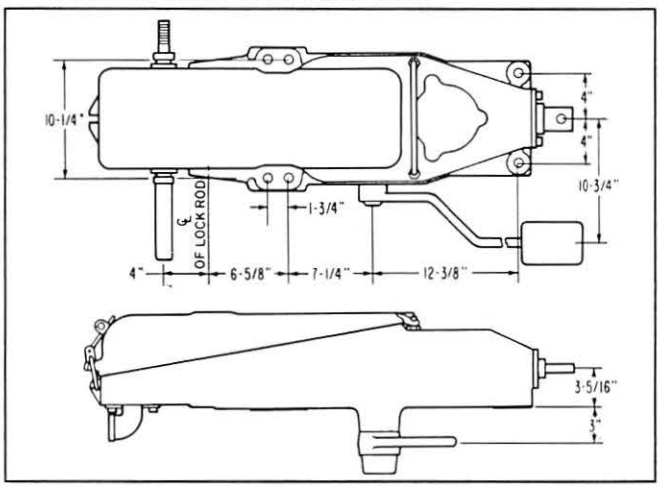

FEATURES

- Positive operation, rugged construction
- Meets applicable AAR requirements
- Machines available with or without low or high target
- Adaptable to right or left-hand layouts; interchangeable parts
- Built-in circuit controller and point detector

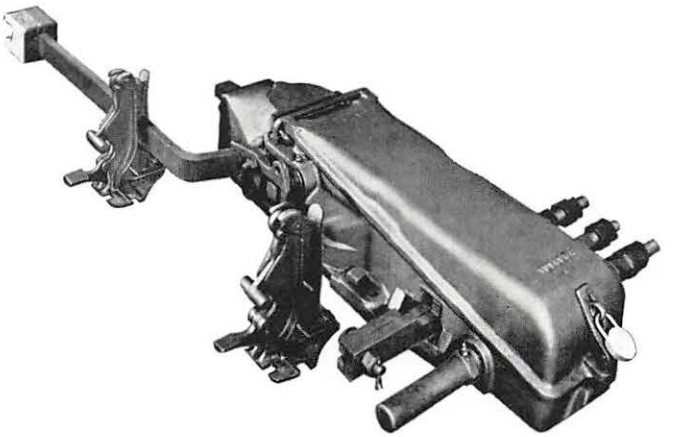

HOW TO ORDER

The T-20 or T-21 switch machine is ordered as follows:

1. Select the desired machine configuration from the tabulation at the top of the next page 2. If a different configuration than those listed is required, contact US&S Sales.
2. To order a T-21 Switch Machine (with target staff), select either the low (15-5/8 ") or high (7', 5-11/16") target staff attachment from the page 2 tabulation.
3. To order complete switch, derail layouts and fittings such as gauge plates, operating rods, front rods, lock rods etc., provide the following information:
   A. Track plan with:
      a. Weight and section of rail
      b. Length of switch rail
      c. Switch point dimensions "U, V, W, X, Y and Z" and size of holes "T" as shown in the figure at the top of page 2
      d. Cross-section of ties, giving face and depth. Plan should show spacing of ties and dimensions from end of point to edge of point tie
      e. Distance "S" of mechanism from gauge (see figure).
      f. Distance "P" between center of switch rod and end of switch point (see figure)

   B. Plan showing design and dimensions of rail braces, switch rods and rail clips (furnished by customer). Unless otherwise specificed, US&S will supply a weatherproof type of adjusting bracket for the switch rod.

   C. Plan showing design and dimensions of gage, riser and butt plates, if furnished by the customer.
4. To order replacement parts, refer to the tabulations beginning at the bottom of page 2.

COPYRIGHT 1988, UNION SWITCH & SIGNAL INC.

HOW TO ORDER (cont'd)

Basic Switch Machine

PART NO.	CONTROL. CONTACTS	REV. P. DET.	SW. PT. LAYOUT	CLOSED	LOCK BAR***
N103552*	4 Open	W/O	R. H.	R. H.	Rack
N103896*	H. D.**	W/O	R. H.	R. H.	Rack
N212768*	4 Open	W/O	L. H.	L. H.	Rack
N212769	4 Open	W/O	L. H.	L. H.	Ind.
N212788	4 Open	W/O	R. H.	R. H.	Ind.
N212789*	H. D.**	W/O	L. H.	L. H.	Rack
N212795*	H. D.**	W/O	L. H.	L. H.	Ind.
N214732*	H. D.**	W/O	R. H.	R. H.	Ind.
N385635-0002	2 Open 2 Closed	W/O	L. H.	L. H.	Rack
N385635-0003	2 Open 2 Closed	W/O	L. H.	R. H.	Rack
N385636	4 Open	W/O	R. H.	R. H.	Rack
N385636-0002	4 Open	W/O	L. H.	L. H.	Rack
N385637	2 Open 2 Closed	With	R. H.	R. H.	Rack
N385637-0002	2 Open 2 Closed	With	L. H.	L. H.	Rack

* With external heavy duty terminals
**Heavy duty ***Rack driven or independent

Target Staff (Converts T-20 to T-21 machine)

PART NO.	DESCRIPTION
N383605	Low Target Staff, 15-5/8" height
N383607	High Target Staff, 7', 5-11/16" height

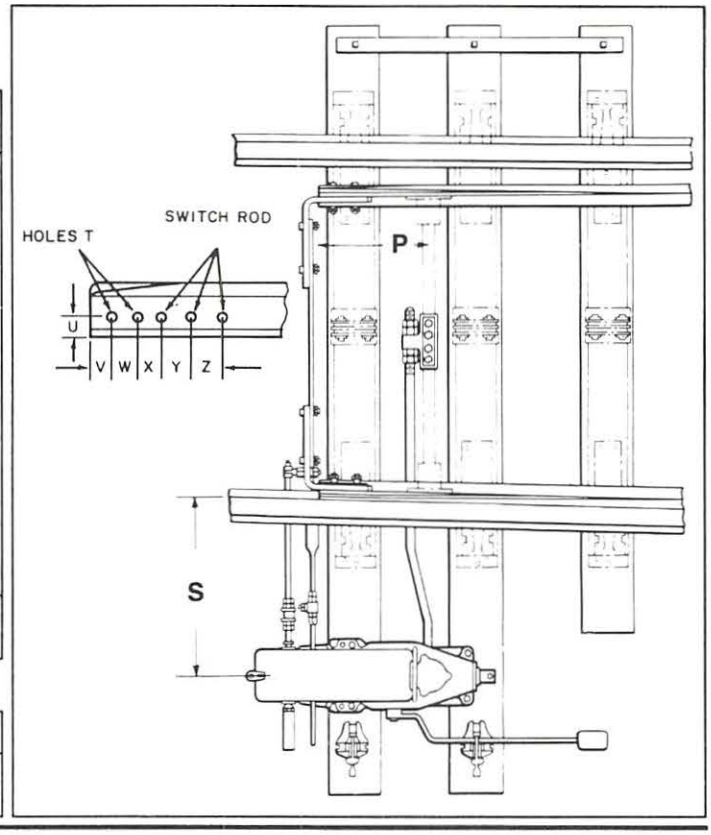

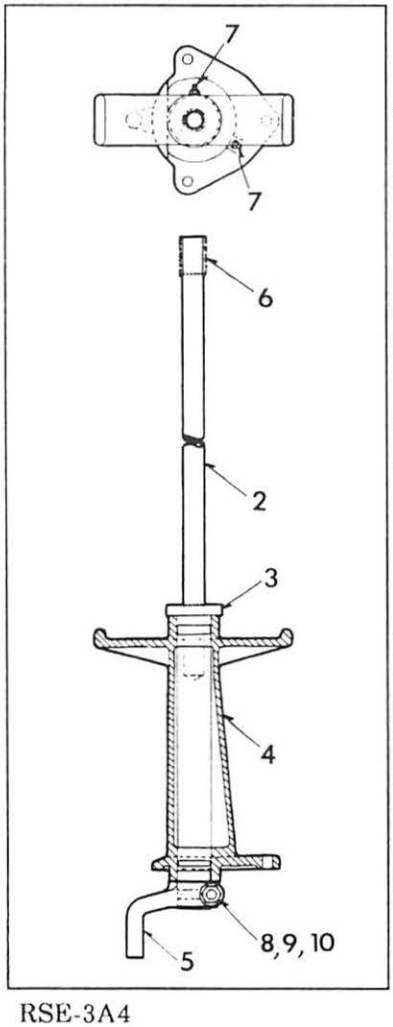

REPLACEMENT PARTS

Low Target Staff N383607 (see right)

REF.	PART NO.	DESCRIPTION
1	R383604	Target shaft assembly
2	M383588	Target staff (Note 1)
3	M105983	Target shaft (Note 1)
4	M102274	Support
5	M101473	Target drive gear
6	M383594	Tube
7	J039137	Grease fitting
8	J046664	Bolt, 1/2 x 3 sq. hd.
9	J048013	Nut, 1/2 13 UNC 2B heavy
10	J047769	Washer, 1/2 pl. stl., lock

Note (1) Included under part number R383604.

High Target Staff N383605 (see left)

REF.	PART NO.	DESCRIPTION
1	R383606	Target shaft assembly
2	M383589	Target staff (Note 1)
3	M213586	Target shaft (Note 1)
4	M207480	Support
5	M101473	Target drive gear
6	M383594	Tube
7	J039137	Grease fitting
8	J046664	Bolt, 1/2 x 3 sq. hd.
9	J048013	Nut, 1/2 13 UNC 2B heavy
10	J047769	Washer, 1/2 pl. stl., lock

Note (1) Included under part number R383606.

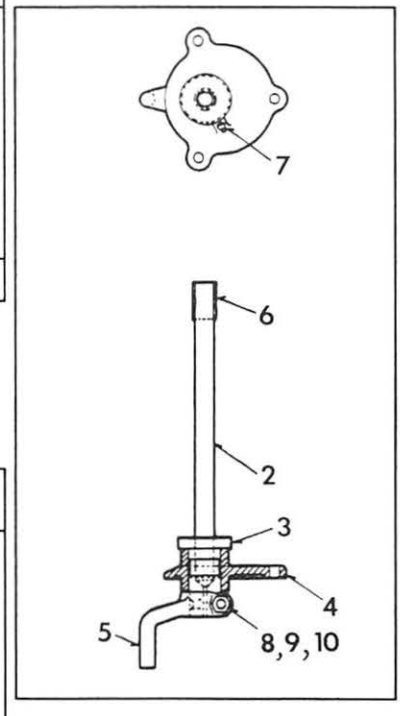

REPLACEMENT PARTS (cont'd)

Basic Switch Machine (See figure on p. 4)

REF.	PART NO.	DESCRIPTION
1	M250855	Box, movement
2	N106162	Cover, complete
3	M101405	Cover (Note 1)
4	M106161	Staple (Note 1)
5	N103462	Rack
6	M101402	Rack (Note 2)
7	M103341	Stud (Note 2)
8	M210140	Roller Guide (Note 2)
9	M210139	Roller (Note 2)
10	M103342	Stud (Note 2)
11	M103456	Crank, escapement
12	M101401	Pinion
13	M101444	Lock bar guide
14	(See Tab.)	Circuit Controller
15	(See Tab.)	Bar
16	M103457	Operating Lever
17	M194803	Journal, bearing
18	M103446	Bearing
19	N105792	Lever, complete
20	R103543	Lever arm (Note 3)
21	M210138	Shaft (Note 3)
22	M435597	Counterweight (Note 3)
23	(See Tab.)	Bar Lock
24	N102112	Hasp, complete
25	M101442	Hasp (Note 4)
26	M101443	Nut (Note 4)
27	J487301	Pin, roll (Note 4)
28	M103344	Tee bolt
29	(See Tab.)	Clamp, washer
30	(See Tab.)	Bolt
31	J480287	Nut, 1/2-13 hex, brass
32	M103381	Hold-down bolt
33	J776059	Molded terminal board
34	(See Tab.)	Bracket, contact (L. H.)

Notes
(1) Included under Ref. 2 part number.
(2) Included under Ref. 5 part number.
(3) Included under Ref. 19 part number.
(4) Included under Ref. 24 part number.

REF.	PART NO.	DESCRIPTION
35	(See Tab.)	Bracket, contact (R. H.)
36	J048301	Nut, insulated molded
37	(See Tab.)	Bolt or stud
38	J052362	Screw, 5/16-18 x 1-5/8 fil. hd.
39	(See Tab.)	Screw, hex
40	J046642	Bolt, 3/8-16 x 3-1/4
41	(See Tab.)	Washer
42	J048013	Nut, 1/2-13, NC heavy
43	J048240	Nut, 1/2-13, NC square
44	(See Tab.)	Nut
45	(See Tab.)	Washer
46	J047768	Washer, 3/8 stl., lock
47	J047769	Washer, 1/2 pl. stl., lock
48	J047771	Washer, 5/8 stl.
49	J048009	Nut, 3/8
50	J047751	Washer, 1/2 phosphor bronze, lock
51	J039137	Grease fitting, straight
52	J039142	Grease fitting, elbow
53	A067043	Packing
54	M107488	Bushing
55	(See Tab.)	Point detector bar cover
56	J032900	Plug, 1/8 sq. hd.
57	M232151	Filler
58	J047503	Washer, 1/2 stl. pl.
59	J032989	Plug
60	J703330	Protector, 1-3/16
61	J032926	Protector
62	(See Tab.)	Cover
63	J046449	Bolt
64	(See Tab.)	Screw
65	(See Tab.)	Washer
66	(See Tab.)	Screw
67	(See Tab.)	Cover plate
68	(See Tab.)	Nut
69	(See Tab.)	Washer
70	(See Tab.)	Spring, retainer
71	(See Tab.)	Latch, spring
72	(See Tab.)	Flexible lead

	MACHINE TOP PART NO.													
REF.	N214732	N212795	N212789	N103896	N212788	N212769	N103552	N212768	N385636	N385635 -0002	N385635 -0003	N385636 -0002	N385637	N385637 -0002
14	N103854	N103854	N103854	N103854	N103551	N103551	N103551	N103551	N103551	N106778	N106778	N103551	N213496	N213496
15	N107199	N107199	N107199	N107199	N107199	N107199	N107199	N107199	N107199	N107199	N107199	N107199	N105110	N105110
23	N106787	N106787	N103960	N103960	N105169	N105169	N103445	N103445	N103445	N103445	N103445	N103445	N103445	N103445
29	M250916	M250916	M250916	M250916	M188796	M188796	M188796	M188796	--	--	--	--	--	--
30	M250913	M250913	M250913	M250913	M189429	M189429	M189429	M189429	--	--	--	--	--	--
34	N251718	N251718	N251718	N251718	M250835	M250835	M250835	M250835	--	--	--	--	--	--
35	N251720	N251720	N251720	N251720	M250836	M250836	M250836	M250836	--	--	--	--	--	--
37	M210569	M210569	M210569	M210569	M103343	M103343	M103343	M103343	M103343	M103343	M103343	M103343	M103343	M103343
39	J050089	J050089	J050090	J050090	J050090	J050090	J050089	J050089	J050089	J050089	J050089	J050089	J050089	J050089
41	M057102	M057102	M057102	M057102	--	--	--	--	--	--	--	--	--	--
44	J048020	J048020	J048020	J048020	--	--	--	--	--	--	--	--	--	--
45	J047526	J047526	J047526	J047767	J047526	J047526	J047767	J047526	J047767	J047767	J047767	J047767	J047767	J047767
55	M107486	M107486	M107486	M107486	M107486	M107486	M107486	M107486	M107486	M107486	M107486	M107486	N107487	N107487
62	--	M211381	M211381	M211381	M211381	M211381	M211381	M211381	M211381	M211381	M211381	M211381	M211381	M211381
64	--	--	--	--	J051340	J051340	J051340	J051340	--	--	--	--	--	--
65	--	--	--	--	J047818	J047818	J047818	J047818	--	--	--	--	--	--
66	--	--	--	--	--	--	M065018	M065018	M065018	M065018	M065018	M065018	M065018	M065018
67	--	--	--	--	--	--	M212022	M212022	M212022	M212022	M212022	M212022	M212022	M212022
68	--	--	--	--	--	--	J048006	J048006	J048006	J048006	J048006	J048006	J048006	J048006
69	--	--	--	--	--	--	J047642	J047642	J047642	J047642	J047642	J047642	J047642	J047642
70	--	--	--	--	--	--	--	--	--	--	--	--	M109442	M109442
71	--	--	--	--	--	--	--	--	--	--	--	--	M103557	M103557
72	--	--	--	--	--	--	--	N244214	--	--	--	--	--	--

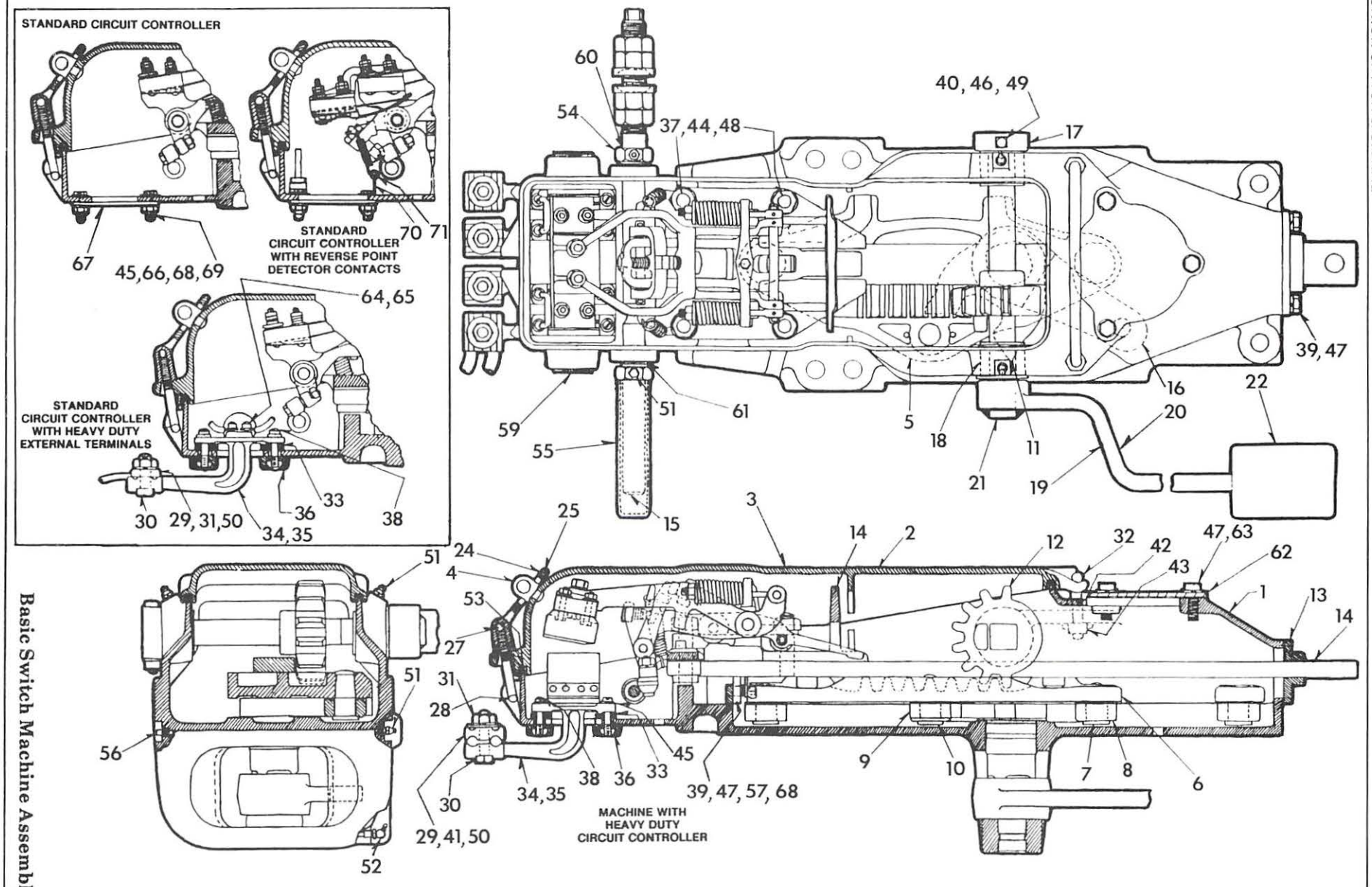

Basic Switch Machine Assembly

REPLACEMENT PARTS (cont'd)

Standard Circuit Controllers N103551 and N106778

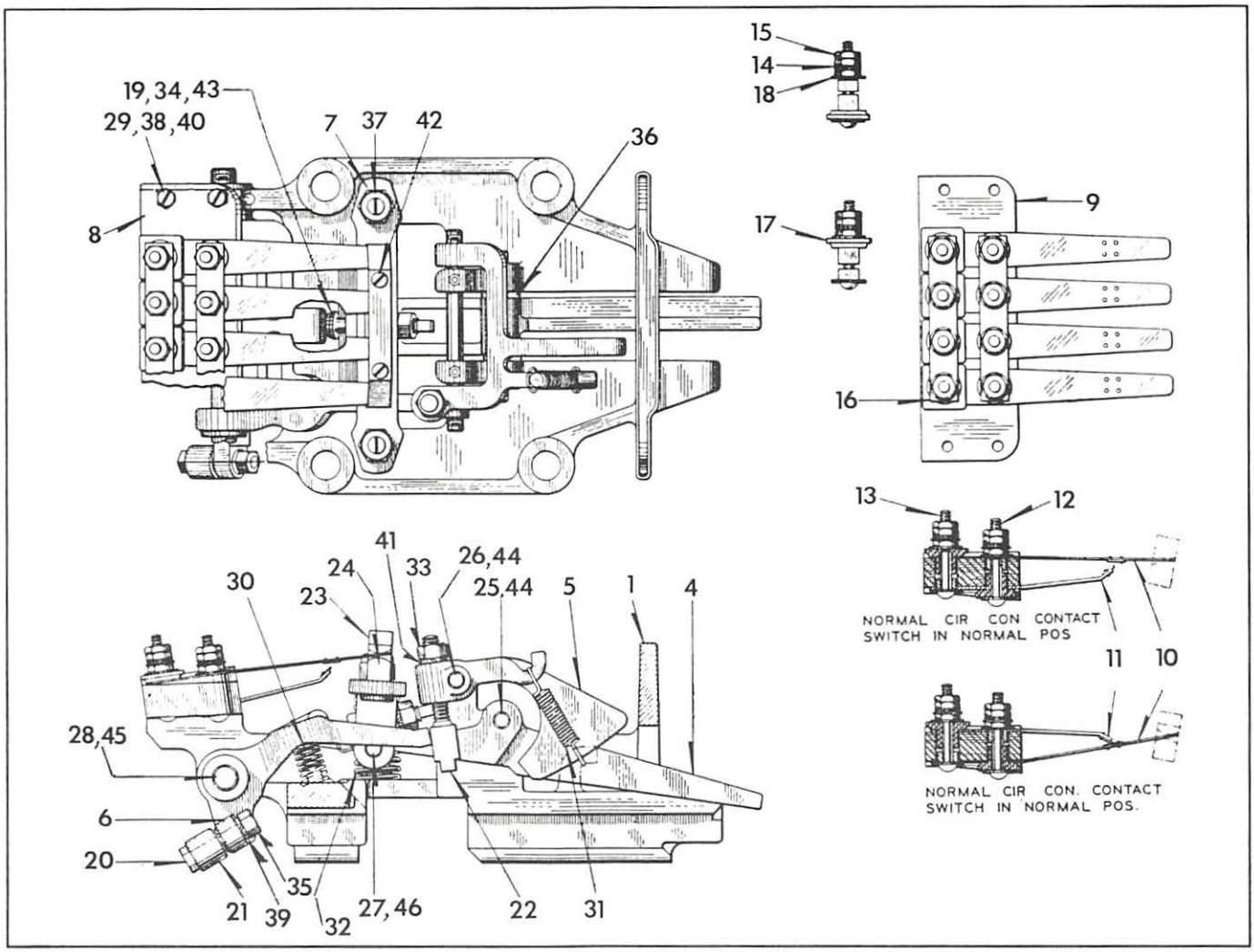

REF.	PART NO.	DESCRIPTION
1	N103463	Frame assembly
2	M101437	Frame (Note 1)
3	M103345	Stud, guide (Note 1)
4	M101438	Rocker Arm
5	M101439	Latch Arm
6	M210925	Lever
7	M101441	Bracket, operating
8	N103420	Board, spring contact, for controller N103551
	N105980	Board, spring contact, for controller N106778
9	J077026	Board (Note 2)
10	N072592	Srping contact (Note 2)
11	N072590	Spring, complete (Note 2)
12	N072594	Terminal Post (Note 2)
13	N072593	Terminal Post (Note 2)
14	J047818	Washer, 17/64 x 9/16, copper (2)
15	J480300	Nut, 14-24 hex, brass (Note 2)
16	M047290	Connector (Note 2)
17	J077634	Bushing, molded (Note 2)
18	M076515	Washer (Note 2)
19	M261362	Adjusting screw
20	M103359	Roller screw

Notes (1) Included under Ref. 1 part number.
(2) Included under Ref. 8 part number.

REF.	PART NO.	DESCRIPTION
21	M210141	Roller
22	M293159	Point detector latch
23	J078053	Cap, molded springboard
24	J077695	Support, molded contact
25	M049875	Pin
26	M209386	Pin
27	M209417	Pin
28	M105336	Shaft
29	M249659	Screw
30	M103348	Spring
31	M103557	Latch spring
32	J068792	Spring, phosphor bronze coil
33	J048063	Nut, 3/8 24 UNF 2B heavy
34	J048181	Nut, 1/2-20 hex, jam
35	J048006	Nut, 5/16 18 UNC 2B
36	J047502	Washer, 3/8 stl. pl.
37	J048111	Nut, 3/8 elastic stop
38	J047500	Washer, 3/16 stl. pl.
39	J047767	Washer, 5/16 stl. lock
40	J047669	Washer, 12PS, lock
41	J047768	Washer, 3/8 stl. lock
42	M451358-2518	Screw, 12-28 x 1-1/8 fil. hd.
43	J047783	Washer, 1/2 pl. stl. lock
44	J048618	Cotter pin, 1/8 x 3/4 spring steel
45	J048619	Cotter pin, 1/8 x 7/8 spring steel
46	J048622	Cotter pin, 1/8 x 1/4 spring steel

REPLACEMENT PARTS (cont'd)

Standard Circuit Controller N213496 With Reverse Point Detection

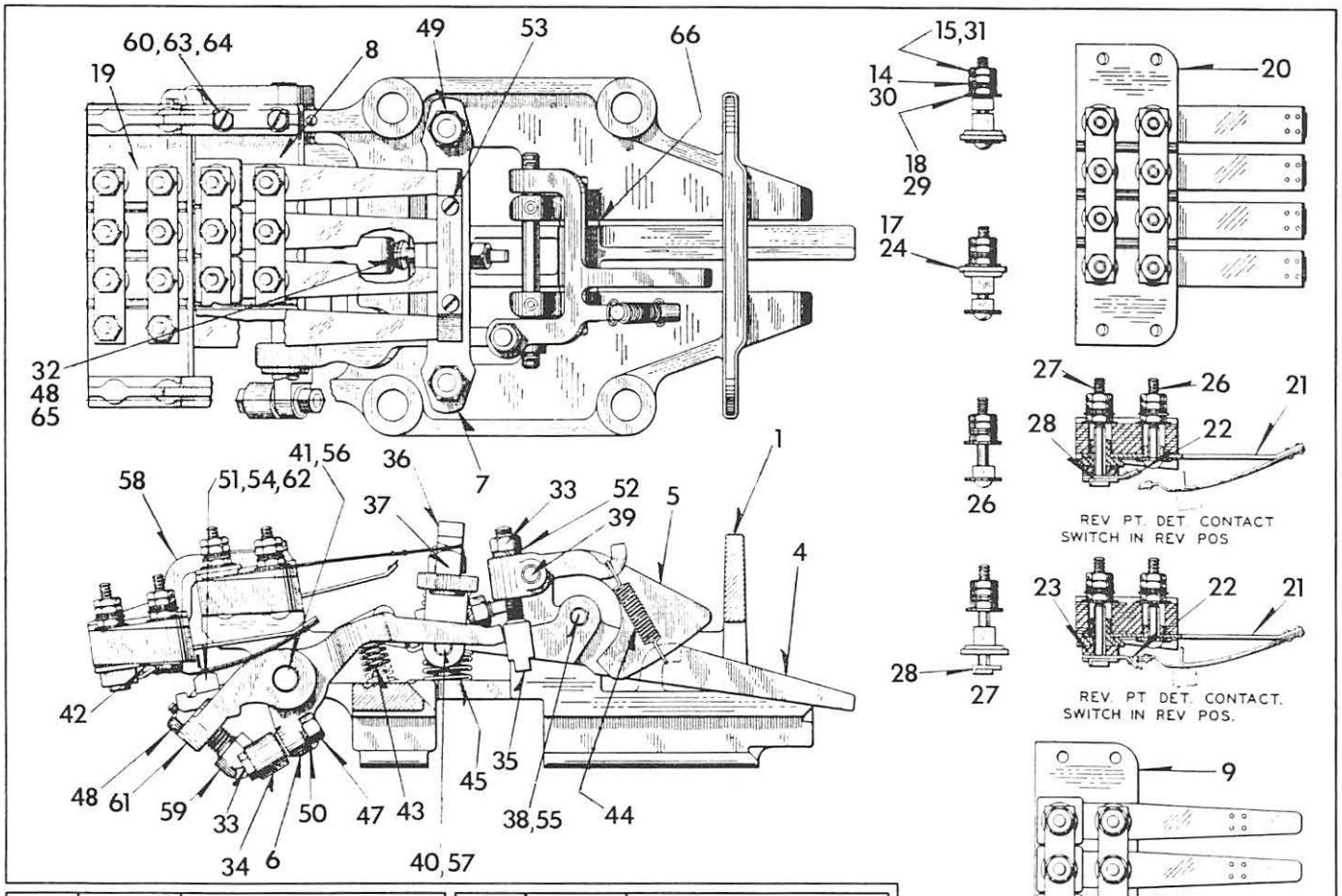

REF.	PART NO.	DESCRIPTION
1	N103463	Frame assembly
2	M101437	Frame (Note 1)
3	M103345	Stud, guide (Note 1)
4	M101438	Rocker arm
5	M101439	Latch arm
6	M210925	Lever
7	M101441	Bracket, operating
8	N105980	Board, spring contact
9	J077026	Board (Note 2)
10	N072592	Spring contact (2)
11	N072590	Spring, complete (2)
12	N072594	Terminal post (2)
13	N072593	Terminal Post (2)
14	J047818	Washer, 17/64 x 9/16 copper (Note 2)
15	J480300	Nut, 14-24 hex brs. (2)
16	M047290	Connector (Note 2)
17	J077634	Bushing, molded (2)
18	M076515	Washer (Note 2)
19	N213490	Board, spring contact
20	J077026	Board (Note 3)
21	N105102	Spring complete (3)
22	N105098	Contact, fixed (3)
23	M105094	Spacer (Note 3)
24	J077634	Bushing, molded (3)
25	M047290	Connector (Note 3)
26	N105175	Terminal post (3)
27	M130200	Terminal post (3)
28	M105177	Term. post lock (3)
29	M076515	Washer (Note 3)
30	J047818	Washer (Note 3)
31	J480300	Nut (Note 3)

REF.	PART NO.	DESCRIPTION
32	M261362	Adjusting screw
33	M103359	Roller screw
34	M210141	Roller
35	M293159	Point detector latch
36	J078053	Cap, molded springboard
37	J077695	Support, molded contact
38	M049875	Pin
39	M209386	Pin
40	M209417	Pin
41	M105105	Pin
42	M249659	Screw
43	M103348	Spring
44	M103557	Latch spring
45	J068792	Spring, phosphor bronze
46	J048063	Nut, 3/8 24 UNF 2B hvy.
47	J048006	Nut, 5/16-18 UNC 2B
48	J048181	Nut, 1/2-20 hex jam
49	J048111	Nut, 3/8 elastic stop
50	J047767	Washer, 5/16 stl. lock
51	J047733	Washer, #10 stl. lock
52	J047768	Washer, 3/8 stl, lock
53	M451358 -2518	Screw, #12-28 x 1-1/8 fil.
54	M451358 -0108	Screw
55	J048618	Cotter pin, 1/8 x 3/4
56	J048612	Cotter pin, 3/32 x 7/8
57	J048622	Cotter pin, 1/8 x 1/4
58	M210927	Bracket
59	M105096	Point detector stud
60	M105288	Screw
61	M210926	Detector lever

REF.	PART NO.	DESCRIPTION
62	M105095	Contact support
63	J047500	Washer, 3/16 stl. pl.
64	J047669	Washer, lock
65	J047783	Washer, 1/2 pl. stl. lock
66	J047502	Washer, 3/8 stl pl.

Notes (1) Inc. under Ref. 2 part no.
(2) Inc. under Ref. 8 part no.
(3) Inc. under Ref. 19 part no.

REPLACEMENT PARTS (cont'd)

Circuit Controller with Heavy Duty Contacts N103854

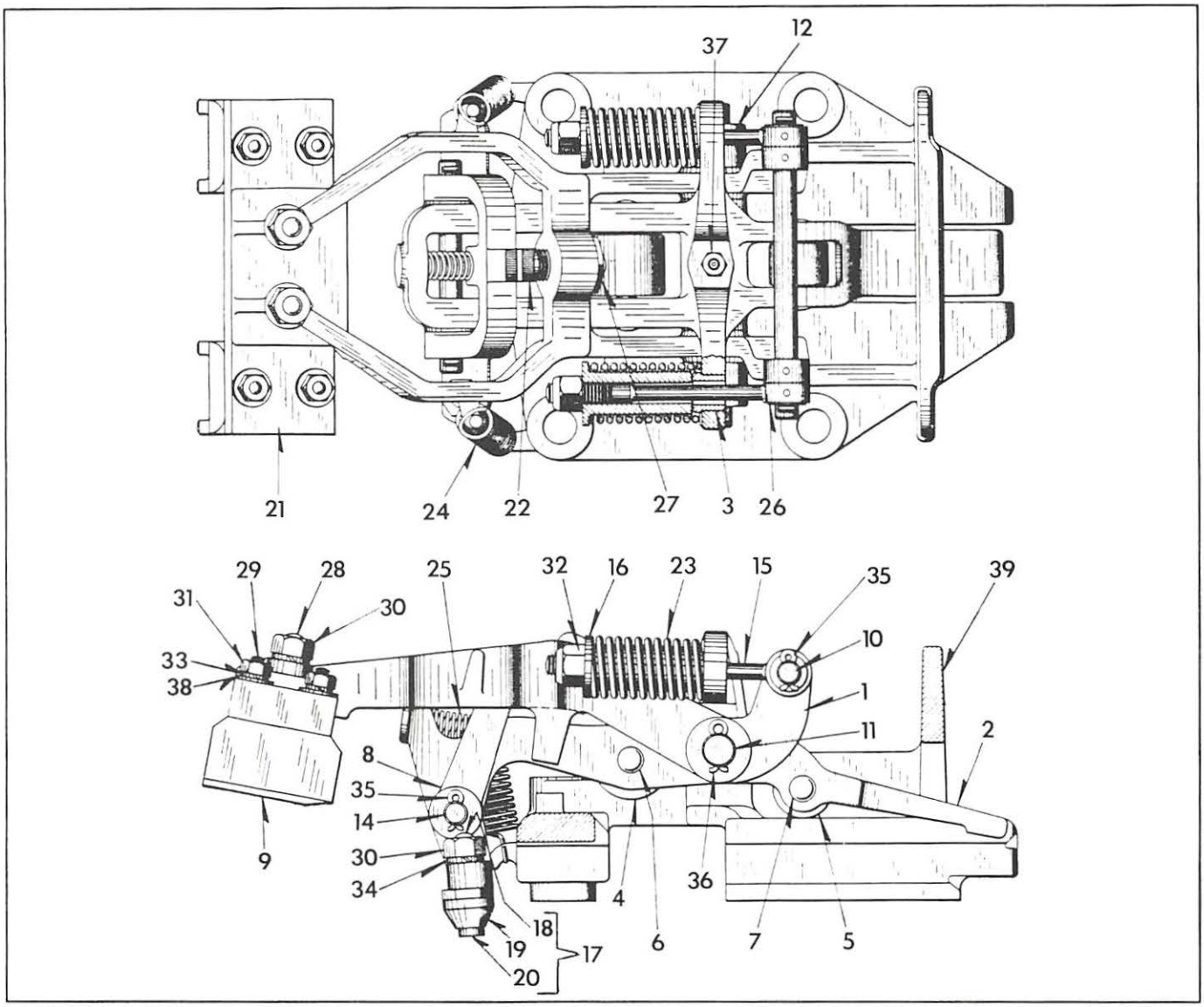

REF.	PART NO.	DESCRIPTION
1	M103629	Contact Arm
2	N103628	Latch bracket, complete
3	M207745	Bushing (Note 1)
4	M210514	Roller (Note 1)
5	M189298	Roller (Note 1)
6	M189297	Stud (Note 1)
7	M189296	Stud (Note 1)
8	M103913	Latch
9	M160612	Contact
10	M210523	Pin
11	N189427	Shaft, complete
12	M189425	Shaft (Note 2)
13	M155143	Plug (Note 2)
14	M210522	Pin
15	M210721	Eyebolt
16	M189423	Spring socket
17	N103832	Point detector roller stud
18	M103831	Stud (Note 3)

Notes (1) Included under Ref. 2 part number.
(2) Included under Ref. 11 part number.
(3) Included under Ref. 17 part number.

REF.	PART NO.	DESCRIPTION
19	M103829	Roller (Note 3)
20	M103830	Washer (Note 3)
21	M160556	Contact block
22	M210245	Screw
23	J068665	Spring, steel coil
24	J068667	Spring, steel coil for switch mech.
25	M103843	Spring
26	M155385	Washer
27	J048083	Nut, 5/8-18 hex, jam
28	J050059	Screw, 3/8-16 x 1-3/4, hex
29	J050023	Screw, 1/4 x 1-1/2 hex
30	J048009	Nut, 3/8–16 UNC 2b heavy
31	J048002	Nut, 1/4-20 UNC 2B heavy
32	J048111	Nut, 3/8 elastic stop
33	J047766	Washer, 1/4 pl. stl. lock
34	J047768	Washer, 3/8 stl. lock
35	J048618	Cotter pin, 1/8 x 3/4 spr. stl.
36	J048632	Cotter pin, 3/16 x 1-1/8 stl.
37	J039137	Grease fitting
38	J047501	Washer, 1/4 stl. pl.
39	M103851	Frame

VITAL PLUG-IN DC LINE RELAY
(Magnetic Stick)

PP-151

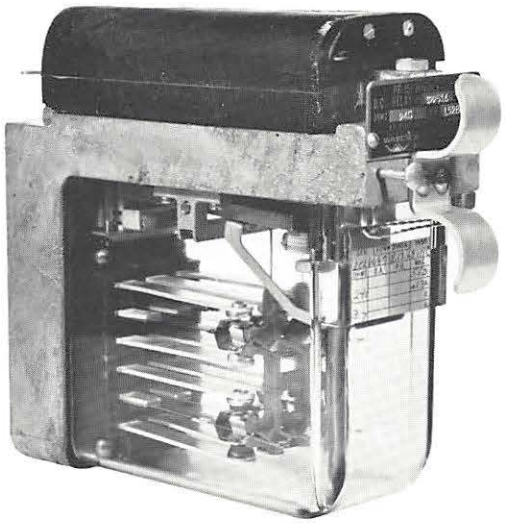

The PP-151 relay is a dc magnetic stick relay that stays in the last operated position after control energy is removed. Full contact pressure is maintained during deenergization to ensure circuit continuity. There are two types of PP-151 relays, wayside and car-carried.

HOW TO ORDER

Order the magnetic stick relays by part number from the tabulation below. To aid in proper identification, specify the contacts and coil resistance along with the part number when ordering.

A mounting base is required for these relays and must be ordered by a separate part number. If ordering the mounting base only, specify the relay it is to be used with.

DESIGN/OPERATION NOTES

Front testing facility is available on some PP-151 relays. This is a means for opening the coil circuit during system check-out or reading current without disturbing the relay or its wiring.

Energization values given for each relay are the values at which the relay will become energized, but response will generally occur at some lower value.

APPLICATION NOTES

The PP-151 is intended for polar circuits where the last position must be retained on loss of power. The wayside type is designed for polar control, indication circuits and switch control. In the switch control application, it is used in conjunction with or to control type PN-150BM relays.

ADDITIONAL INFORMATION

For detailed parts listings and additional information on the PP-151 relay, request Service Manual 4596-G.

PART NO. (WITH FRONT TESTING)	PART NO. (WITHOUT FRONT TESTING)	CONTACTS	COIL RESISTANCE (OHMS)	MAX. POLAR PICKUP & WORKING VOLTS	MIN. POLAR PICKUP & WORKING VOLTS	NOTES
N322507-701	--	6 NR SIC	240	5.52	4.25	
N322507-702	--	6 NR SIC	25	1.54	1.2	1
N322516-701	--	4 NR SIC 2 NR Sil	240	5.52	4.25	2
N438007-802		6 NR SIC	400	6.85	5.3	
--	N438007-804	6 NR SIC	400	6.85	5.3	
--	N437657	6 NR SIC	400/400	9.6	7.4	3

MOUNTING BASE

N451376-0302

CONTACTS

SIC - Silver-to-silver impregnated carbon, normal and reverse.

Sil - Silver-to-silver, normal and reverse.

NOTES:

1. Wayside relay, normally used in series with other relay for polar control and indication circuits.
2. Wayside relay, used in combination with PN-150BM for switch control.
3. Car-carried relay.

PRINTED IN USA

UNION SWITCH & SIGNAL DIVISION
AMERICAN STANDARD INC. / PITTSBURGH, PA 15237

COPYRIGHT 1986 USS DIVISION OF AMERICAN STANDARD INC

DA-10 ELECTRO-PNEUMATIC SWITCH MACHINE

The DA-10 Electro-Pneumatic Switch Machine is an extremely fast, direct acting switch machine suitable for a wide variety of yard applications. Among its features are choked exhaust ports that prevent switch point jamming, a choice of magnet valve coils and trailable operation. This switch machine can be used in right or left-hand layouts.

DESCRIPTION

The basic DA-10 Switch Machine consists of a double-acting, 5-inch diameter cylinder with a Pilotair® valve, and two magnet valves mounted on a cylinder head. The piston moves through a 6-inch stroke and and is designed to operate on 55 to 150 lbs. of cylinder air pressure. A 12 to 24 Vdc power supply is required to operate the magnet valves.

With 100 lbs. of air pressure and a 22 Vdc supply, the DA-10 Switch Machine completes one operation (switch normal-to-reverse or reverse-to-normal) in approximately 0.4 second. Since air under pressure is always connected to one end position, the switch piston will always be either extended or retracted, holding the switch in position. Switch point slamming is prevented by two "choked" exhaust ports that vent air near the end of the piston stroke.

Two models of the DA-10 Switch Machine are available, with a choice of 130 or 400 ohm magnet valves. These valves are electrically controlled and feed air to the Pilotair valve. In turn, the Pilotair valve controls of the flow of air that drives the piston. This valve also provides the exhaust ports for venting the cylinder. Fittings are provided for periodic lubrication to insure a minimum of friction during piston rod travel.

APPLICATION

The DA-10 Switch Machine can be used in either a right-hand or left-hand layout. Any particular machine can be readily converted to the alternate because of fully interchangeable parts. Installation dimensions are shown below. Procedures for ordering a complete DA-10 Switch Machine layout are given on page 2.

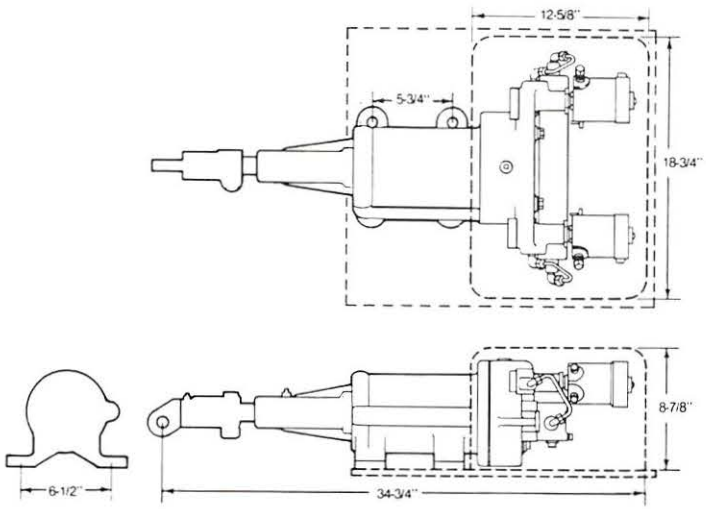

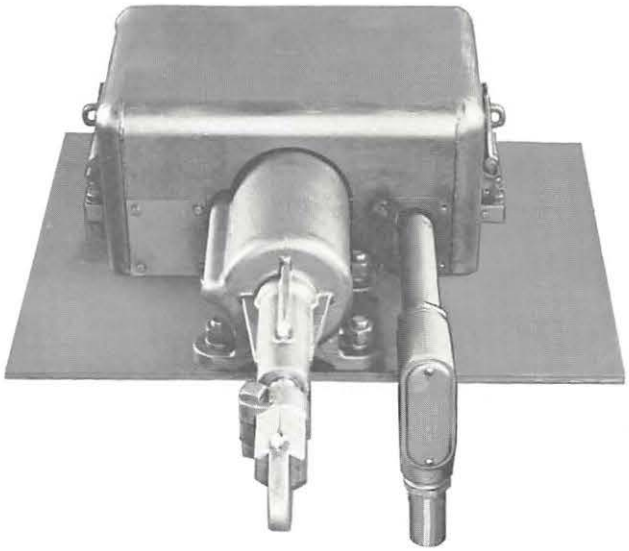

FEATURES

- Fast-acting switch movement
- Well suited for classification yard applications
- Trailable
- Cylinder cast in one piece insures accurate alignment
- Operates over 55 to 150 psi range
- Choked exhaust ports prevent switch point jamming
- Meets applicable AAR standards

HOW TO ORDER

Order the basic DA-10 Electro-Pneumatic Switch Machine from the tabulation below. Note that machine, cover and base plate can be ordered under a single "X" part number, or as individual pieces. Request Serivce Manual 5708 for a detailed parts listed of the DA-10. Refer to page 2 for ordering of complete switch machine layouts.

PART NO.	DESCRIPTION
X451646-3201	DA-10 Electro-Pneumatic Switch Machine, with 130 ohm magnet valve coil, cover and base plate.
X451646-3202	DA-10 Electro-Pneumatic Switch Machine, with 400 ohm magnet valve coil, cover and base plate.
N372277	DA-10 Electro-Pneumatic Switch Machine only, with 130 ohm magnet valve coil.
N394172	DA-10 Electro-Pneumatic Switch Machine only, with 400 ohm magnet valve coil.
N372039	Cover only.
M372070	Base plate only.

UNION SWITCH & SIGNAL INC.
A member of the ANSALDO Group

RSE-3B1
REV. 6/88

COPYRIGHT 1988, UNION SWITCH & SIGNAL INC.

DA-10 SWITCH MACHINE LAYOUT ORDERING

To order a complete DA-10 switch machine layout, please provide the following information:

1. Track plan showing:

   a. Weight and section of rail.
   b. Length of switch point.
   c. Switch point dimensions "U-V-W-X-Y and Z", and sizes of holes "T" (see figure below).
   d. Cross-section of ties, giving face and depth. Plan should show spacing of ties and dimension from end of point to edge of point tie.

2. Right or left-hand layout.

3. Part number(s) of switch machine and related components from tabulation on front of sheet.

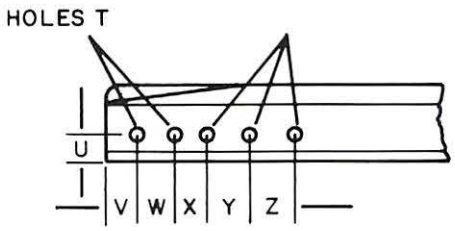

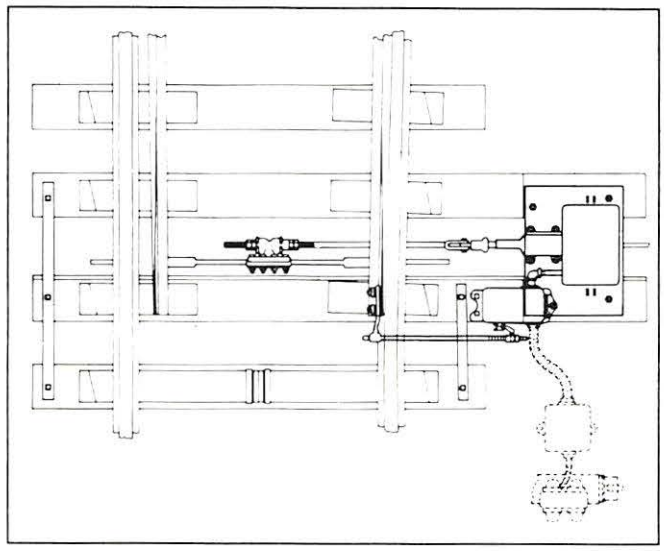

Options shown above in dotted line include ES-20 signals and junction boxes. Refer to applicable RSE catalog sections for ordering information.

ROLLER BEARING ASSEMBLY FOR SWITCHES

US&S's switch roller bearing assembly is a simple, inexpensive device that greatly reduces friction between the switch points and the supporting surfaces. Installed in sets, this assembly reduces the load on the switch machine and allows the machine to apply force in a smooth, uniform manner. As a result, switch machine operating life is greatly extended.

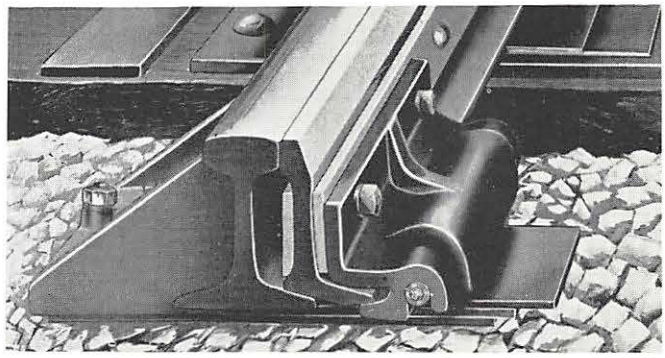

DESCRIPTION

The switch roller bearing Assembly consists of a pre-drilled trunion mounting bracket with roller and pre-drilled spring bracket with mutli-leaf cantilver spring. The spring bracket is bolted to the stationary rail and engages the roller bearing. In turn, the roller bearing is mounted to the trunnion bracket, which is bolted to the switch point rail. Malleable iron is used in the brackets for strength and long service life. Lubrication is accomplished via a single grease fitting located on the roller shaft. The bearing itself is a standard Timken unit (tapered type) that is fully sealed against moisture and debris.

These roller bearing assemblies can be used on mechanically operated switches, switch springs with mechanical facing point lock, and outlying power-operated switches. Separate assemblies are available to suit different rail sizes (refer to ordering information).

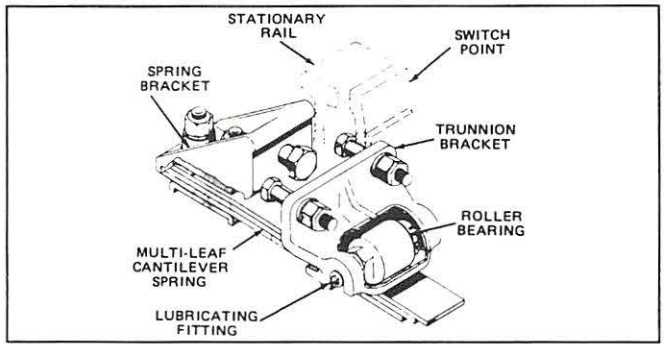

FEATURES

- Helps reduce wear and tear on switch machines
- Shifts train weight to ties when train passes over
- Rugged construction assures long service life
- Uses high quality Timken roller bearing
- Simple maintenance - single grease fitting
- Models available for different rail sizes

HOW TO ORDER

Order complete switch roller bearing assemblies from the tabulations at the top of page 2. Make sure to select the correct assembly for the rail weight and reinforcing bar thickness ranges in question and specify the required quantity. Note that part number X231923-002 includes a pair of roller bearing assemblies. Order replacement parts from the tabulations beginning on page 2. Contact US&S Sales for to order custom assemblies not covered in this catalog.

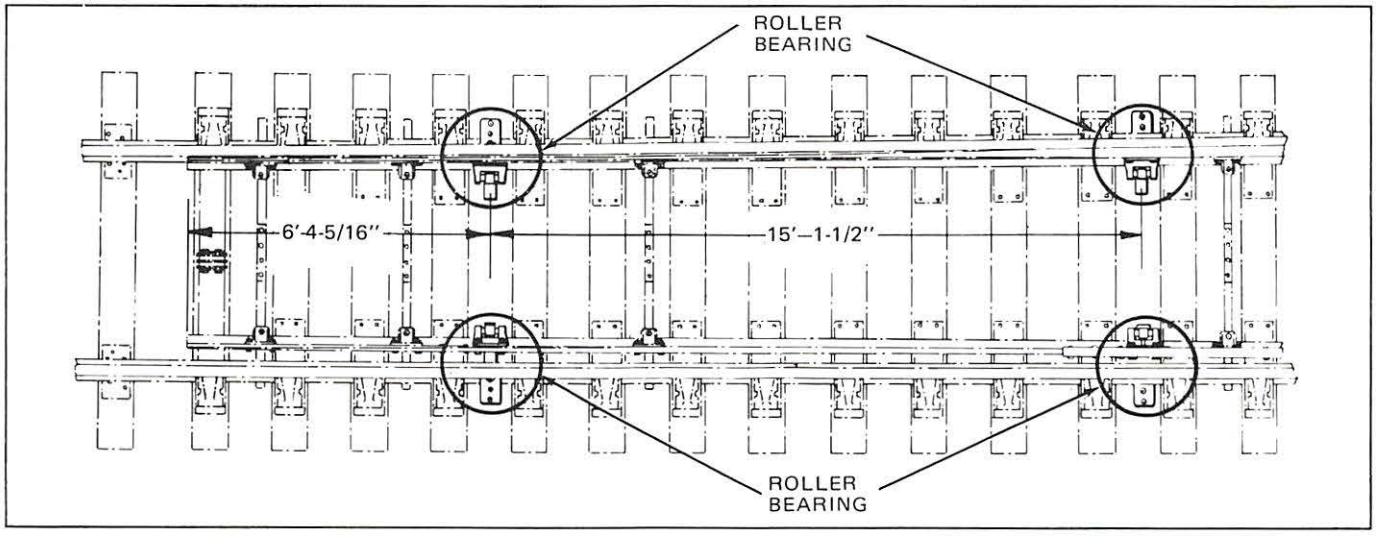

COPYRIGHT 1988, UNION SWITCH & SIGNAL INC.

HOW TO ORDER (Cont'd)

One Switch Roller Bearing Assembly (Suitable for 1/2" to 1-1/4" Reinforcing Bar on Gage Side)			
PART NO.	RAIL APPLICATIONS		
X231923-001	112# R.E.	129# T.R.	132# H.F.
	112# H.F.	130# R.E.	133# R.E.
	115# R.E.	130# H.F.	136# C.F. & I.
	119# C.F. & I.	131# R.E.	140# P.S.
	127# Dudley	132# R.E.	

Two Switch Roller Bearing Assemblies (Suitable for 1/2" to 1-1/4" Reinforcing Bar on Gage Side.)			
PART NO.	RAIL APPLICATIONS		
X231923-002	112# R.E.	129# T.R.	132# H.F.
	112# H.F.	130# R.E.	133# R.E.
	115# R.E.	130# H.F.	136# C.F. & I.
	119# C.F. & I.	131# R.E.	140# P.S.
	127# Dudley	132# R.E.	

One Switch Roller Bearing Assembly (Suitable for 3/8" to 1-1/4" Reinforcing Bar on Gage Side)				
PART NO.	RAIL APPLICATIONS			
X243375	100# R.E.	100# R.A.	105# Dudley	110# R.E.

REPLACEMENT PARTS

Roller Bearing Assembly X243375

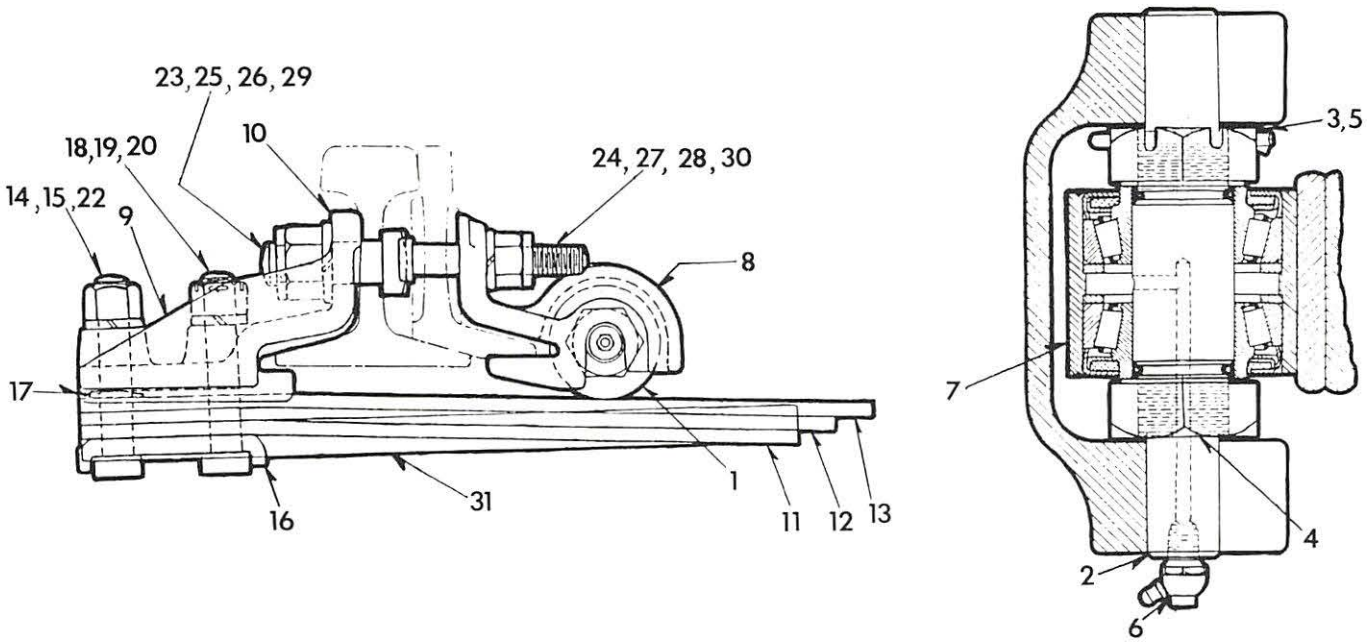

REF.	PART NO.	DESCRIPTION
1	N198174	Bearing and Shaft
2	M198182	Shaft (Note 1)
3	M198185	Nut, Adjusting (Note 1)
4	M198251	Nut, Adjusting (Note 1)
5	J048638	Cotter, 3/16 x 2-1/2, Spr. Stl. (Note 1)
6	J323251	Grease Fitting (Note 1)
7	J066039	Roller Bearing (Note 1)
8	M100746	Bracket
9	M100748	Bracket, Complete
10	M100745	Bracket (Note 2)
11	M198178	Spring (Note 2)
12	M198179	Spring (Note 2)
13	M198180	Spring (Note 2)
14	J046896	Bolt, 7/8-9 x 4-3/4 Sq. Hd. (Note 2)

Notes (1) Included under Ref. 1 part number.
(2) Included under Ref. 9 part number.

REF.	PART NO.	DESCRIPTION
15	J047773	Washer, 7/8 Steel Lock (Note 2)
16	M198181	Bolt, Lock (Note 2)
17	M254903	Fulcrum Plate (Note 2)
18	J048136	Nut, 7/8 9UNC Heavy (Note 2)
19	M253505	Bolt (Note 2)
20	J486000	Cotter, 5/32 x 1-3/4 Spr. Stl. (2)
21	S003039	Instruction Tag (Not Shown) (2)
22	J048029	Nut, 7/8 9UNC-2B, Heavy (Note 2)
23	M243374	Bolt
24	M230666	Bolt
25	J048039	Nut, 1-1/8 7UNC 2B
26	J048432	Nut, Lock, 1-1/8 Am. Std.
27	J048430	Nut, 3/4-10 Hex, Lock
28	J047546	Washer, 13/16
29	J047757	Washer, 1-1/8
30	J048026	Nut, 3/4-10 UNC 2B HX
31	M106098	Gage (not included under top part no.)

REPLACEMENT PARTS (Cont'd)

Roller Bearing Assembly X231923-001

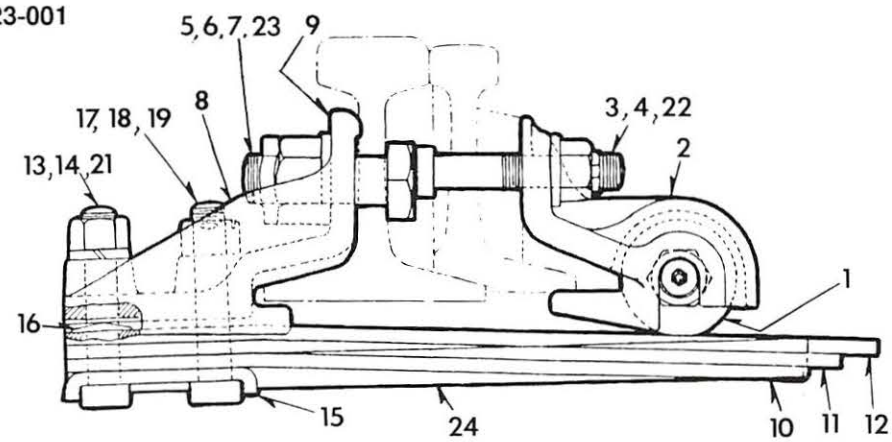

REF.	PART NO.	DESCRIPTION
1	N198174	Bearing and Shaft (Note 1)
2	M198177	Bracket
3	J480267	Locknut, 7/8-9, Hex
4	J047547	Washer, 7/8 Spr. Lock
5	J048176	Nut, 1-1/4 Hex, Steel
6	J048429	Nut, 1-1/4-7, Hex Grip
7	J047834	Washer, 1-1/4 Spring
8	N198173	Spring Bracket
9	M198176	Bracket (Note 2)
10	M198178	Spring (Note 2)

Notes (1) Refer to Ref. 1 of assembly X243375 (page 2) for parts breakdown.
(2) Included under Ref. 8 part number.

REF.	PART NO.	DESCRIPTION
11	M198179	Spring (Note 2)
12	M198180	Spring (Note 2)
13	J046896	Bolt, 7/8-9 x 4-3/4 Sq. Hd. (Note 2)
14	J047773	Washer, 7/8 Steel Lock (Note 2)
15	M198181	Bolt, lock (Note 2)
16	M254903	Fulcrum Plate (Note 2)
17	J048136	Nut, 7/8 9UNC Heavy (Note 2)
18	M253505	Bolt (Note 2)
19	J486000	Cotter, 5/32 x 1-3/4 Spr. Stl. (Note 2)
20	S003039	Instruction Tag (Not Shown) (2)
21	J048029	Nut, 7/8 9UNC-2B, Heavy (Note 2)
22	J460130	Bolt, 7/8-9 x 5 Square Head
23	M271799	Bolt
24	M106098	Gage (not included under top part no.)

Roller Bearing Assembly X231923-002

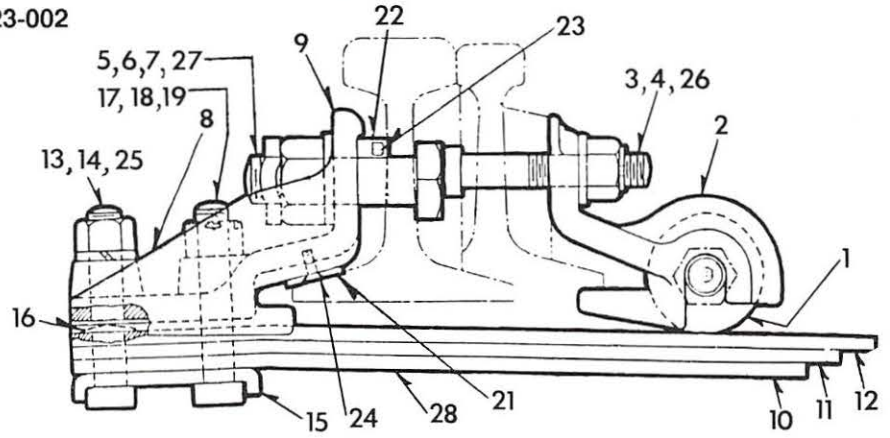

REF.	PART NO.	DESCRIPTION
1	N198174	Bearing and Shaft (Note 1)
2	M198177	Bracket
3	J480267	Locknut, 7/8-9, Hex
4	J047547	Washer, 7/8 Spr. Lock
5	J048176	Nut, 1-1/4 Hex, Steel
6	J048429	Nut, 1-1/4-7, Hex Grip
7	J047834	Washer, 1-1/4 Spring
8	N198173-001	Bracket and Spring Assembly
9	M438559	Bracket Spring (Note 2)
10	M198178	Spring (Note 2)
11	M198179	Spring (Note 2)
12	M198180	Spring (Note 2)

Notes (1) Refer to Ref. 1 of assembly X243375 (page 2) for parts breakdown.
(2) Included under Ref. 8 part number.

REF.	PART NO.	DESCRIPTION
13	J046896	Bolt, 7/8-9 x 4-3/4 Sq. Hd. (Note 2)
14	J047773	Washer, 7/8 Steel Lock (Note 2)
15	M198181	Bolt, lock (Note 2)
16	M254903	Fulcrum Plate (Note 2)
17	J048136	Nut, 7/8 9UNC Heavy (Note 2)
18	M253505	Bolt (Note 2)
19	J486000	Cotter, 5/32 x 1-3/4 Spr. Stl. (Note 2)
20	S003039	Instruction Tag (Not Shown) (2)
21	M438557	Plate, Spacer (Note 2)
22	M438558	Bar, Spacer (Note 2)
23	J050213	Screw, 1/4 x 3/4, Cap (Note 2)
24	J052207	Screw, 1/4-20 x 5/8 Fil. Hd. (Note 2)
25	J048029	Nut, 7/8 9UNC-2B, Heavy (Note 2)
26	J460130	Bolt, 7/8-9 x 5 Square Head
27	J460125	Bolt, 1-1/4 x 4-5/8, Hex
28	M106098	Gage (not included under top part no.)

SWIVEL FRONT RODS AND SWIVEL POINT LUGS FOR SWITCHES

US&S's Swivel Front Rods are designed as rugged, long-life alternatives to conventional rigid connection front rods. While providing a connection of great strength between the switch points, the unique swivel design permits the horizontal movement necessary to limit strain or prevent breakage of the connection resulting from stagger in switch point position.

The Swivel Point Lugs provide a secure link between the Swivel Front Rod and the switch track.

DESCRIPTION

Swivel Front Rods

The Swivel Front Rod consists of a front bar and two switch point lugs. The front bar is turned up at each end for attachment to the point lugs by tee bolts. In turn, the point lugs are curved to fit the tee bolt head, serving as a vertical pivot pin. Likewise, the engaging faces of the front bar ends are curved to fit the point lugs.

The hole for the tee bolt in each end of the front bar has a relatively close fit, while the corresponding point lug hole is slotted. This allows a swivel action in the horizontal plane at each end while, at the same time, providing the desired rigidity in the vertical plane for support of the switch point.

The front bar is insulated at the lock rod connection lug. Its length is adjustable in 1/8" steps, providing a wide range of lengths to accomodate the various thicknesses of reinforcing bars and the various switch point openings typically encountered.

The Swivel Front Rods are made from high strength steel. They may be utilized in switch layouts having a distance between inside faces of point reinforcing bars of 4', 3-1/2" (max.) to 3', 11-1/8" (min.)

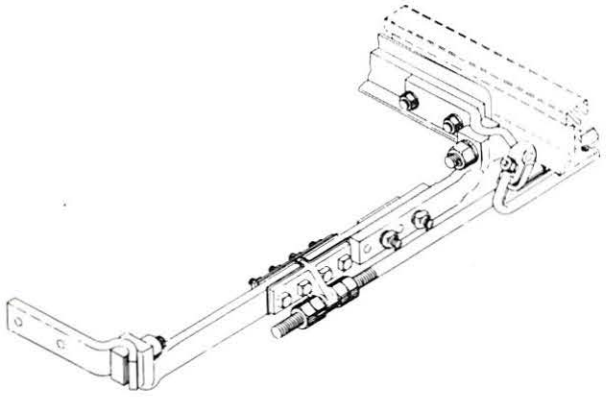

DETAIL OF SWIVEL ROD AND LUGS

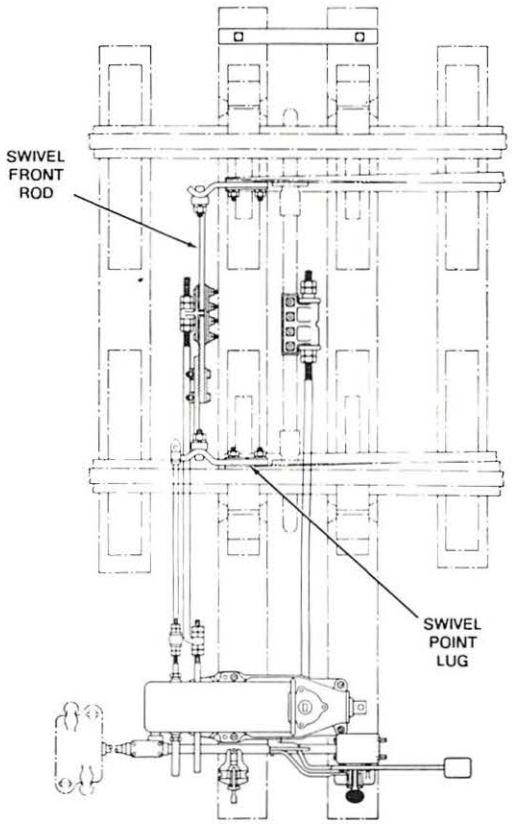

TYPICAL APPLICATION OF SWIVEL FRONT RODS AND SWIVEL POINT LUGS

Swivel Point Lugs

The Swivel Point Lugs link the Swivel Front Rod to the switch track and are actutaed by a connecting rod. Two types are available. One is supplied with a ball tip for mating with a point detector connecting rod. The other is furnished with a plain end.

The lugs are symmetrical about the switch point bolt holes and therefore may be interchanged. Since the lock rod connection may be run from either side to the bracket lug, the same front rod parts are used at right-hand and left-hand layouts.

FEATURES

- Rugged steel construction for long service life
- Unique swivel design eliminates breakage-causing strain
- Versatile - adjustable length
- May be used in right-hand or left-hand layouts

COPYRIGHT 1988, UNION SWITCH & SIGNAL INC.

HOW TO ORDER

Order the required Swivel Front Rods, Swi-vel Point Lugs and steel pin bolt from the tabulations on this page. Contact US&S Sales for special configurations not covered by these particular assemblies and components.

Order replacement parts for the complete Swivel Front Rod assemblies from the parts lists on page 3. NOTE: These parts lists only cover Swivel Front Rod assemblies N229002 and N303520. Many of these parts are common to all Swivel Front Rod assemblies produced by US&S. However, owners of custom assemblies (other than N229002 and N303520) should contact US&S Sales before ordering replacement parts.

Swivel Front Rods

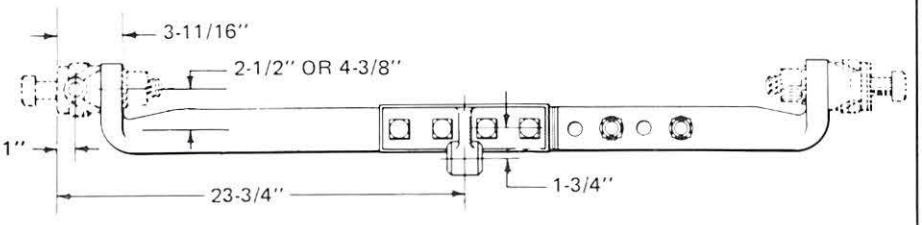

PART NO.	DESCRIPTION
N229002	Swivel Front Rod with 2-1/2" downset
N303520	Swivel Front Rod with 4-3/8" downset

Swivel Point Lug with Ball End

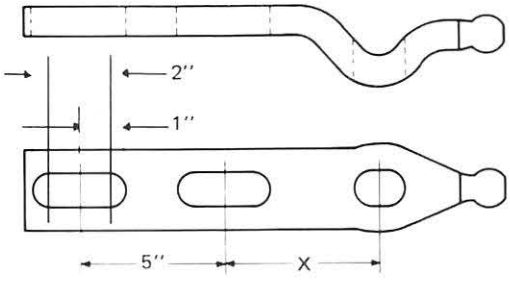

FOR USE WITH 1" BOLTS		FOR USE WITH 3/4" BOLTS	
PART NO.	DIM. "X"	PART NO.	DIM. "X"
M286016	4-1/2"	M309848-001	4-3/4"
M297146	5-1/2"	M257124	5-1/2"
M293573	6-3/8"	M373959	6-3/4"

Swivel Point Lug with Plain End

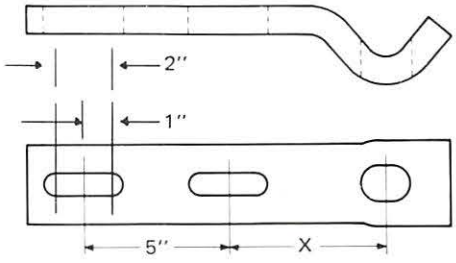

FOR USE WITH 3/4" BOLTS		FOR USE WITH 1" BOLTS	
PART NO.	DIM. "X"	PART NO.	DIM. "X"
M280484	4-3/4"	M438580-001	3-1/2"
M257125	5-1/2"	M286840	4-1/2"
M284293	6-3/4"	M283081	5-1/2"
		M284294	6-3/8"
		M438580-002	7-3/4"

Ball End Swivel Point Lug Kit

PART NO.	DESCRIPTION
X438788	Kit, complete (components listed below)
M257124	Ball-end Swivel Point Lug (X = 5-1/2"), used with 3/4" bolts (Qty = 1)
M211915-8139	Bolts (Qty = 2)
J048026	Hex nuts (Qty = 2)
J047772	Lock washers (Qty = 2)
J048632	Pins (Qty = 2)

Plain End Swivel Point Lug Kit

PART NO.	DESCRIPTION
X438789	Kit, complete (components listed below)
M257125	Plain-end Swivel Point Lug (X = 5-1/2"), used with 3/4" bolts (Qty = 1)
M211915-8139	Bolts (Qty = 2)
J048026	Hex nuts (Qty = 2)
J047772	Lock washers (Qty = 2)
J048632	Pins (Qty = 2)

Steel Pin Bolts

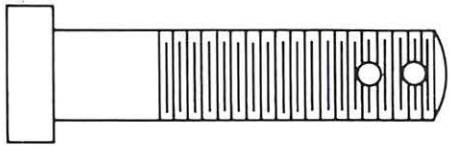

PART NO.	DESCRIPTION
M304192	3/4" x 5-1/4" steel pin bolt
M304193	3/4" x 4-1/4" steel pin bolt
M312567	1" x 4-3/4" steel pin bolt
M393550	1" x 5-1/2" steel pin bolt

REPLACEMENT PARTS

Note: Contact US&S Sales for replacement parts of custom-made Swivel Front Rod assemblies (Top part numbers other than N229002 or N303520)

Part No. N229002 (with 2-1/2" downset)

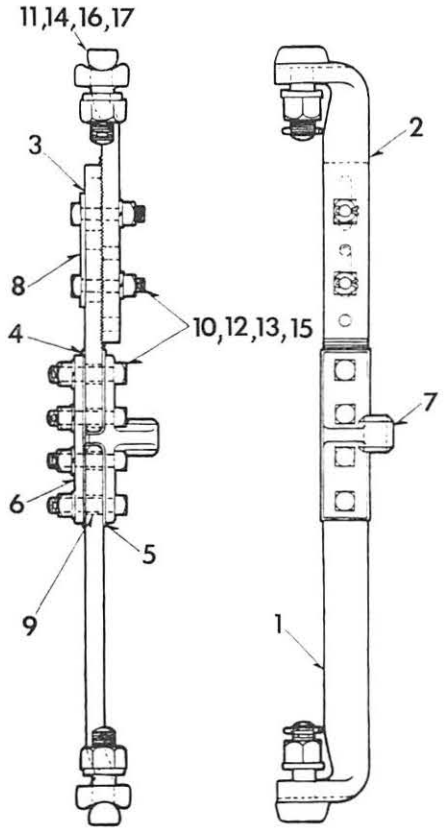

REF.	PART NO.	DESCRIPTION
1	R451467-0701	Bar, swivel front
2	R451467-0801	Bar, swivel front
3	M239076	Bar
4	M058207	Insulation
5	J078371	Insulation, fiber
6	M051340	Plate
7	M182516	Front rod lug
8	M182519	Plate
9	M182379	Bushing
10	M182518	Bolt
11	M229009	T-bolt
12	J047772	Washer, 3/4 stl. lock
13	J048229	Nut, 3/4-10 UNC 2B st.
14	J048176	Nut, 1-1/4 hex, stl.
15	J048632	Cotter pin, 3/16 x 1-1/8 stl.
16	J047805	Washer, 1-1/4
17	J048644	Cotter pin, 1/4 x 1-3/4 stl.

Part No. N303520 (with 4-3/8" downset)

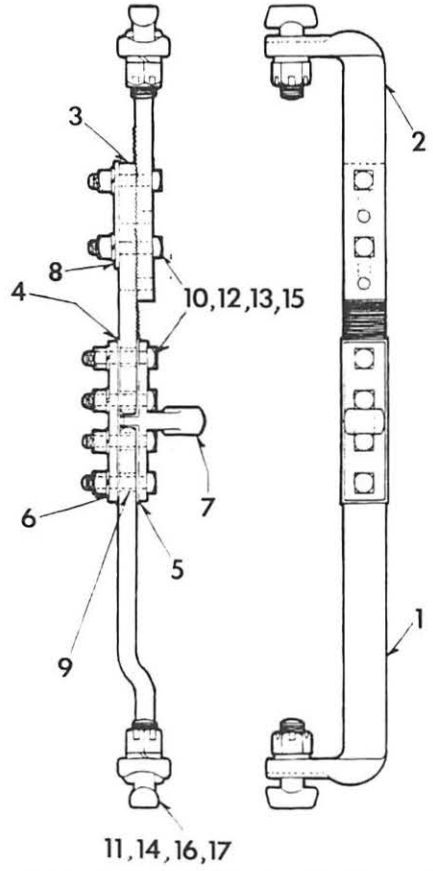

REF.	PART NO.	DESCRIPTION
1	R451467-2901	Bar, swivel front
2	R451467-2802	Bar, swivel front
3	M239076	Bar
4	M058207	Insulation
5	J078371	Insulation, fiber
6	M051340	Plate
7	M105715	Lug
8	M182519	Plate
9	M182379	Bushing
10	M182518	Bolt
11	M308645	T-bolt
12	J047772	Washer, 3/4 stl. lock
13	J048229	Nut, 3/4-10 UNC 2B st.
14	J048127	Nut, 1-1/4 hex, stl.
15	J048632	Cotter pin, 3/16 x 1-1/8 stl.
16	J047805	Washer, 1-1/4
17	J048665	Cotter pin, 1/4 x 2-1/2 stl.

RELAYS, PLUG-IN

GENERAL

General Information for Plug-In Relays RSE-4

VITAL PLUG-IN DC LINE RELAYS

Biased RSE-4A1
Neutral RSE-4A2
Slow Dropaway and/or Pickup RSE-4A3
Magnetic Stick RSE-4A4
Magnetic Blowout RSE-4A5

VITAL PLUG-IN DC TRACK RELAYS

Biased-Ordinary-High Dropaway RSE-4B1

VITAL PLUG-IN TRACK, LINE AND POWER RELAYS

Two Element AC Vane RSE-4C1

VITAL PLUG-IN SWITCH CONTROL RELAYS

DC Type RSE-4D1
AC Type RSE-4D2

VITAL PLUG-IN CODE RELAYS

Code Generating RSE-4E1
Decoding RSE-4E2
Code Following RSE-4E3

PLUG-IN CONTROL RELAYS

Flasher RSE-4F1
Time Element (Thermal) RSE-4F2
Light Out RSE-4F3
Power Off RSE-4F4
Time Element (Mechanical) RSE-4F5
Time Element (Electronic) RSE-4F6

RELAY MOUNTING BASES

PN-150 and PN-250 Bases RSE-4G1
GRS/Safetran Compatible Base (PN-150) RSE-4G2

(Refer to Catalog Section RSE-15 for Cab Signal Relays)

CROSS REFERENCE INDEX

US&S plug-in relays are listed below alphabetically by type and designation. The relay description and catalog section in which the relay appears are shown opposite the relay designation.

RELAY	DESCRIPTION	CATALOG SECTION
PA-150SO	Switch Control - DC Type	RSE-4D2
PC-250B*	Code Following	RSE-4E3
PC-250BAE*	Code Following - High Efficiency	RSE-4E3
PC-250BE*	Code Following - High Efficiency	RSE-4E3
PC-250P*	Code Following - Magnetic Stick	RSE-4E3
PC-250TR*	Code Generating	RSE-4E1
PF-256*	Flasher, DC	RSE-4F1
PN-150B	Line, Biased DC	RSE-4A1
PN-150BC	Code Following	RSE-4E3
PN-150BD	Line, Biased DC	RSE-4A1
PN-150BE	Code Following	RSE-4E3
PN-150BH	Track - High Dropaway	RSE-4B1
PN-150BL	Light-Out	RSE-4F3
PN-150BM	Switch Control	RSE-4A5
PN-150BQS	Track, Biased DC -Quick Shunting	RSE-4B1
PN-150BSR	Line - Slow Dropaway	RSE-4A3
PN-150BTR	Track, Biased DC	RSE-4B1
PN-150HD	Line, DC	RSE-4A1
PN-150N	Line, Neutral DC	RSE-4A2
PN-150NE	Code Following	RSE-4E3
PN-150P	Power Off	RSE-4F4
PN-150SO	Switch Control, DC	RSE-4D1
PN-152SO	Switch Control, DC	RSE-4D1
PN-150T	Time Element (Electronic)	RSE-4F6
PN-250B	Line, Biased DC	RSE-4A1
PN-250BE	Code Following	RSE-4E3
PN-258B	Line, Slow Pickup	RSE-4A3
PN-258BC	Decoding, Biased DC	RSE-4E2
PN-258BSR	Line, Slow Dropaway and Pickup	RSE-4A3
PN-259BSR	Line, Slow Dropaway	RSE-4A3
PN-259SRA	Line, Slow Dropaway	RSE-4A3
PP-151	Line, Magnetic Stick	RSE-4A4
PT-150	Time Element (Thermal)	RSE-4F2
PT-55	Time Element (Mechanical)	RSE-4F5
PV-250	AC Vane	RSE-4C1

*This relay is considered vital, except for the contact material. The application of these relays preclude the necessity for non-welding contacts.

VITAL PLUG-IN SWITCH CONTROL RELAYS

DC TYPE - PN-150SO, PN152SO

Both the PN-150SO and PN-152SO are dc switch overload relays. The PN-150SO is intended for high and low voltage dc switch machines. The PN-152SO relay is intended for dc switch machines where the control circuit requires an overload relay with separate magnetic structures for the overload and stick functions.

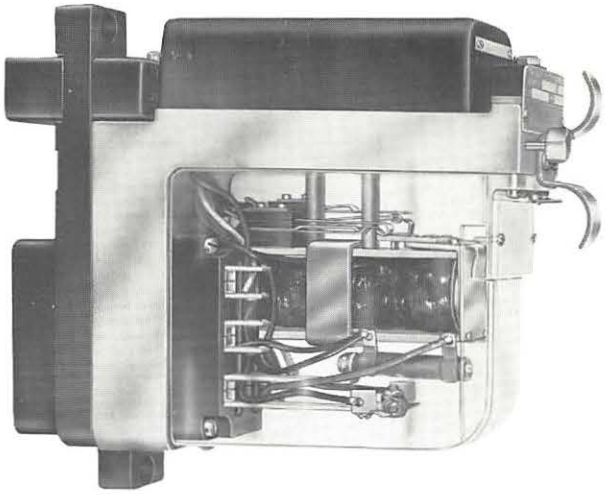

DESCRIPTION

The PN-150SO and PN-152SO relays are used in conjunction with the PN-150BM relay to cut off power to a dc switch machine that has stalled. The motor current flows through the coil; when the operating time (as given in the tabulation below) is exceeded, the relay becomes energized. This opens the control circuit of the PN-150BM relay which, in turn, cuts off power to the switch machine.

The circuit is arranged so that once the PN-150SO relay is energized, it will remain energized until the switch control is reversed. The PN-150SO relay has both sets of coil leads available for external circuit arrangements.

Energization values given for each relay are the values at which the relay will become energized, but response will generally occur at some lower value.

Neither the PN-150SO nor PN-152SO is equipped for front testing.

For detailed parts listings and additional information on the PN-150SO relay, request Service Manual SM-4571. For the PN-152SO relay, request Service Manual SM-5929.

HOW TO ORDER

Order the switch control relays by part number from the tabulations below. To aid in proper identification, specify the contacts and coil resistance along with the part number when ordering.

A mounting base is required for each relay and must be ordered by a separate part number. If ordering the mounting base only, specify the relay it is to be used with.

PN-150SO RELAY

PART NO. (NO FRONT TESTING)	RESISTANCE COIL PLUS RESISTOR (OHMS)		OPERATING TIME - SECONDS (±10%)						
	OPERATING	STICK	4 AMPS	5.5 AMPS	8 AMPS	12 AMPS	14 AMPS	15 AMPS	20 AMPS
N322512-001*	0.039	135	--	--	40.0	8.0	--	--	--
N322512-002**	0.0135	135	--	--	--	--	--	25.0	6.0
N322512-003	0.065	135	17	3.5	--	--	--	--	--
N322512-004	0.025	135	--	--	--	--	10.0	--	--

*For machine having clutch adjusted to slip at 12 amperes.
**For machine having clutch adjusted to slip at 20 amperes.

CONTACTS Internally wired to accomodate circuitry; contact US&S Sales for details.

MOUNTING BASE N451376-0302

PN-152SO RELAY

PART NO. (NO FRONT TESTING)	RESISTANCE COIL PLUS RESISTOR (OHMS)		OPERATING TIME - SECONDS (±10%)	
	OPERATING	STICK	13 AMPS	15 AMPS
N322522-802	0.0456	750	5	3

For machine having clutch adjusted to slip at 13 amperes

Relay has Lexan® cover.

MOUNTING BASE N451376-0302

COPYRIGHT 1988, UNION SWITCH & SIGNAL INC.

VITAL PLUG-IN CODE RELAYS

CODE GENERATING - PC-250TR

The PC-250TR is a high quality code generating relay. It is used to generate code frequencies for coded track circuits and cab signaling equipment.

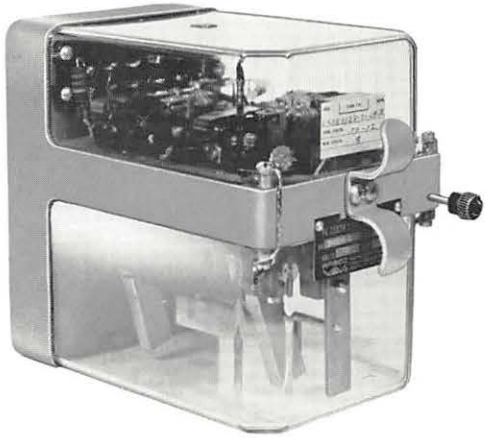

DESCRIPTION

The PC-250TR is tuned to a specific frequency. Its contacts are then used to open or close a circuit at the set rate providing equal off and on times. This relay must be horizontally separated by at least five inches from the code following relays listed in catalog section RSE-4E3. However, PC-250TR relays may be mounted adjacent to each other.

Two types of contacts are available in the PC-250TR relays, L.V. (low voltage) and H.V. (high voltage). The L.V. is silver platinum-to-silver platinum for use in circuits below 50 volts, while the H.V. is tungsten-to-tungsten for use in circuits above 50 volts, to afford longer contact life. The tungsten contacts cannot be employed in low voltage circuits due to the high contact resistance they develop.

Energization values given for each relay are the values at which the relay will become energized, but response will generally occur at some lower value.

The PT-250TR relay is not equipped for front testing.

For detailed parts listings and additional information on the PC-250TR relay, request Service Manual SM-4569.

HOW TO ORDER

Order the code generating relay by the part numbers in the tabulation below. To aid in proper identification, specify the contacts and coil resistance along with the part number when ordering.

A mounting base is required for each relay and must be ordered by a separate part number. If ordering the mounting base only, specify the relay it is to be used with.

PART NO. (NO FRONT TESTING)	CYCLES PER MINUTE	CONTACT ARRANGEMENT				SYSTEM VOLTAGE	COIL RESIS. (OHMS)	INTERNAL ARC SUPPRESSING RESISTOR IN MULTIPLE WITH COIL
		1 (F)	2 (B)	3 (F)	4 (B)			
N322526-021	50	L.V.	L.V.	L.V.	L.V.	10-12	60	510
N322526-017	50	H.V.	H.V.	H.V.	H.V.	16	90	680
N322556-002	75	L.V.	L.V.	L.V.	L.V.	10-12	60	510
N322556-005	75	H.V.	H.V.	L.V.	L.V.	10-12	60	510
N322556-008	75	H.V.	H.V.	H.V.	H.V.	10-12	60	510
N322526-012	75	H.V.	H.V.	H.V.	H.V.	16	90	680
N322526-018	75	L.V.	L.V.	L.V.	L.V.	16	90	680
N322556-818	75	L.V.	L.V.	L.V.	L.V.	16	90	300
N322556-003	120	L.V.	L.V.	L.V.	L.V.	10-12	40	300
N322556-006	120	H.V.	H.V.	L.V.	L.V.	10-12	40	300
N322556-011	120	H.V.	H.V.	H.V.	H.V.	10-12	40	300
N322526-013	120	H.V.	H.V.	H.V.	H.V.	16	60	510
N322556-001	180	L.V.	L.V.	L.V.	L.V.	10-12	60	510
N322526-004	180	H.V.	H.V.	L.V.	L.V.	10-12	60	510
N322556-007	180	H.V.	H.V.	H.V.	H.V.	10-12	60	510
N322526-014	180	H.V.	H.V.	H.V.	H.V.	16	90	680
N322556-009	270	L.V.	L.V.	L.V.	L.V.	10-12	40	300
N322556-010	270	H.V.	H.V.	H.V.	H.V.	10-12	40	300
N322526-015	270	H.V.	H.V.	H.V.	H.V.	16	60	510
N322526-019	270	H.V.	H.V.	L.V.	L.V.	10-12	40	300
N322526-020	420	H.V.	H.V.	L.V.	L.V.	16	60	510
N322526-022	420	L.V.	L.V.	L.V.	L.V.	10-12	40	300
N322526-016	420	H.V.	H.V.	H.V.	H.V.	16	60	510

All relays have Lexan® covers.

MOUNTING BASE - N438689-003

COPYRIGHT 1988, UNION SWITCH & SIGNAL INC.

PLUG-IN DC FLASHER RELAY

PF-256

The PF-256 is a special-purpose relay used to flash signal lamps, primarily in highway crossing signal systems.

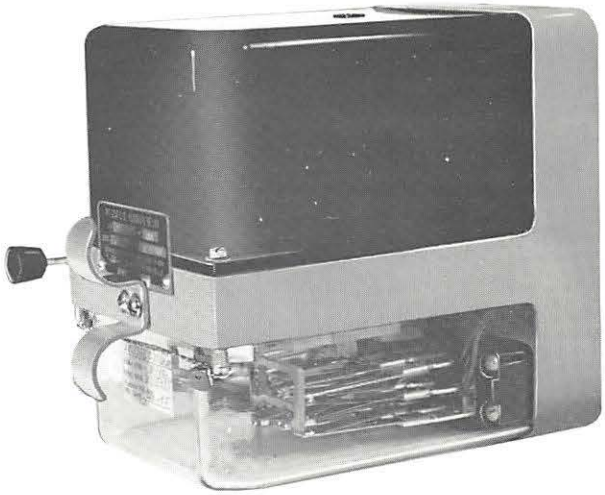

DESCRIPTION

The PF-256 flasher relays operate at a nominal 48,65 or 75 cycles per second to flash lamps. The 48 cycle relay is used to alternately light the lamps of grade crossing protection signals, while the 65 and 75 cycle relays are used to flash wayside signal lamps when such an aspect is required. Contacts in these relays have equal open and close times, each of which is slightly less than 50% of the cycle. For grade crossing applications, this ensures there will be no total dark period when either of the signal lamps is dark. The PF-256 relay contacts can carry up to 5 amperes ac or dc.

Front testing facilitiy is not available on the PF-256.

HOW TO ORDER

Order the flasher relays by the part numbers in the tabulation below. To aid in proper identification, specify the contacts and time range along with the part number when ordering.

A mounting base is required for each relay and must be ordered by a separate part number. If ordering the mounting base only, specify the relay it is to be used with.

ADDITIONAL INFORMATION

For detailed parts listings and additional information on the PF-256 relay, request Service Manual 4565.

PART NO. (NO FRONT TESTING)	START VOLTAGE	CYCLES PER MINUTE (NON-ADJUSTABLE)
N322561-001	5	45 to 55
N322561-002	5	60 to 72
N322561-801	5	45 to 55
N322561-802	5	60 to 72
N322561-803	6	69 to 81
N322561-804*	5	45 to 55
N322561-805*	5	60 to 72
N322561-806*	6	69 to 81

CONTACTS	4NR (all relays) - Low voltagesilver alloy-to-silver alloy, normal and reverse.
COIL RESISTANCE	87.5/87.5 ohms (all relays)
SYSTEM VOLTAGE	8 - 12 V (all relays)

*These relays are designed to mount the snubbing diode external to the relay case. Order kit X438970 (diode and mounting hardware) for new installations.

MOUNTING BASE

N438689-001

UNION SWITCH & SIGNAL INC.
A member of the ANSALDO Group

RSE-4F1
REV. 5/88

COPYRIGHT 1988, UNION SWITCH & SIGNAL INC.

PLUG-IN LIGHT OUT RELAY

PN-150BL

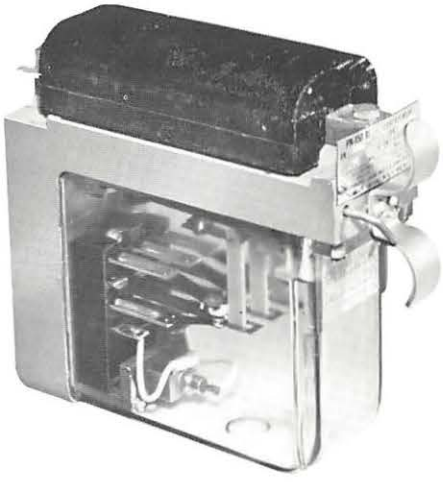

The PN-150BL is a biased, power control relay used for checking lamp filaments.

HOW TO ORDER

Order the light out relays by the part numbers in the tabulation below. To aid in proper identification, specify the contacts and and coil resistance along with the part number when ordering. Also note any auxiliary parts such as diodes.

A mounting base is required for each relay and must be ordered by a separate part number. If ordering the mounting base only, specify the relay it is to be used with.

DESIGN/APPLICATION NOTES

The 3-contact PN-150BL relays have an internal rectifier that permits main coil operation on both ac and dc lighting energy. The 5-contact PN-150BL relays require an external diode unit. This can be mounted on the rear of the mounting base. The 6-contact relays require an external bridge rectifier, which can also be mounted on the rear of the mounting base.

Some PN-150BL relays have a single coil that only permits checking of a lighted lamp. Other PN-150BL relays have two coils. One coil is used to check the lamp when not lighted. This is accomplished by applying a dc voltage across the lamp and the 175 ohm coil in series. If the lamp is good, the resulting current will energize the relay, but will not light the lamp.

Energization values given for each relay are the values at which the relay will become energized, but response will generally occur at some lower value. The PN-150BL relays are not equipped with front testing facility.

ADDITIONAL INFORMATION

For detailed parts listings and additional information on the PN-150BL relay, request Service Manual 6144.

PART NO. (NO FRONT TESTING)	NO. OF COILS	CONTACTS	COIL RESIST. (OHMS)	MINIMUM FULL DROP-AWAY AC AMPS	ENERGIZATION AC AMPS	FOR USE WITH LAMPS REQ. AC AMPS
N322510-801	1	3FB Std.	0.18	0.18	0.7	0.85 - 3.0
N322510-802	1	3FB Std.	0.70	0.08	0.35	0.40 - 3.0
N322510-803	2	3FB Std.	0.30	0.18	0.7	0.85 - 3.0
			175	0.01**	0.042**	
				(1.89V)**	(7.35V)**	
N322510-901	1	3FB Std.	0.18	0.18	0.7	0.85 - 3.0
N322510-902	1	3FB Std.	0.07	0.08	0.35	0.40 - 3.0
N322510-903	2	3FB Std.	0.03	0.18	0.7	0.85 - 3.0
			175	0.01**	0.042**	
				(1.89V)**	(7.35V)**	
N322526-801†	2	5FB Std.	0.30	0.18	0.95	1.0 - 3.0
			175	0.01**	0.042**	
				(1.89V)**	(7.35V)**	
N322526-901†	2	5FB Std.	0.30	0.18	0.95	1.0 - 3.0
			175	0.01**	0.042**	
				(1.89V)**	(7.35V)**	
N322528-801‡	1	6FB Std.	17.5	0.1	0.18	
				0.074**	0.153**	0.25 - 0.5
N322528-901‡	1	6FB Std.	17.5	0.1	0.18	
				0.074**	0.153**	0.25 - 0.5

† Requires external diode unit, arranged for mounting on rear of mounting base. Order diode part no. N434909.

‡ Requires external bridge rectifier, arranged for mounting on rear of mounting base. Order bridge rectifier part no. N451143-250.

** DC calibration. Values shown in brackets ( ) are volts.

CONTACTS - Std. low voltage silver-to-silver-impregnated carbon fronts and silver-to-silver backs.

MOUNTING BASE

N451376-0302

UNION SWITCH & SIGNAL DIVISION
AMERICAN STANDARD INC. / PITTSBURGH, PA 15237

PRINTED IN USA

COPYRIGHT 1986, US&S DIVISION OF AMERICAN STANDARD INC.

RSE-4F3
REV. 10/86

MOUNTING BASES FOR PN-150 AND PN-250 SERIES RELAYS

US&S offers a complete line of mounting bases for PN-150 and PN-250 series plug-in relays. Molded in one piece, these bases have a lower profile than previous bases, yet provide a larger interior cavity for easier wire handling. Ordering references have been reduced to four part numbers each for the PN-150 and PN-250 style bases.

DESCRIPTION

The PN-150 and PN-250 mounting bases are made from long-lasting, non-burning polycarbonate thermoplastic material. They are constructed in one piece and are only 1-25/32" deep. Although this dimension is less than previous bases, the terminal cavity design provides greater volume. This permits easier wire engagement and extraction, for example, when using a #10-12 contact spring and two #10 wires. New receptacle springs have topside wiring to avoid improper alignments. Maintenance tools used on previous bases can also be used on the new bases.

The PN-150 and PN2-50 bases incorporate an improved alphanumeric nomenclature index that identifies cavity rows and relay contact locations. In this index, a given front is always numbered one less less than its corresponding heel, and the heel is always numbered one less than its corresponding back. The matrix also allows quick identification of circuit locations where a circuit board is required on the backs of the base. As shown in the layout illustrations, (see below), rows 3 through 6 are allocated for that purpose.

HOW TO ORDER

Order PN-150 and PN-250 bases, hardware and receptacle contact springs from the tabulations on the back. To order the base for a specific PN-150 or PN250 series relay, refer to the RSE catalog section for that relay. Use the cross-reference index on the back when ordering replacements for the older bases.

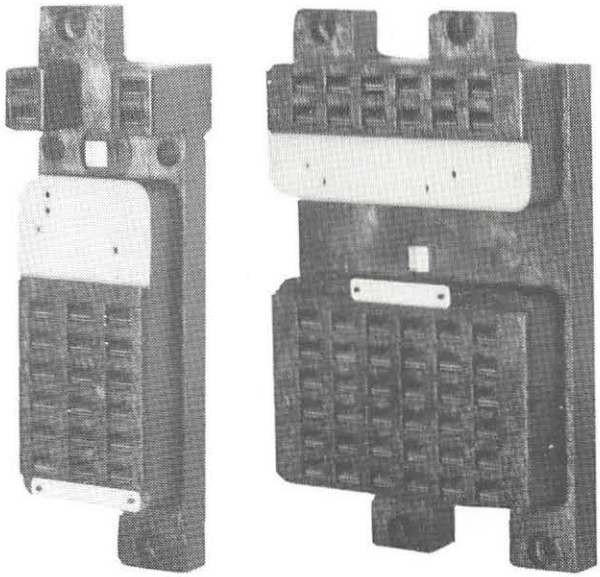

FEATURES

- Made from tough, non-burning thermoplastic polycarbonate.
- Improved nomenclature index simplifies identification of cavity rows and columns.
- Lower profile base design and larger interior cavity space make wire pass-through easier.
- More accessible topside mounted contact receptacle springs help prevent improper alignment.
- Fewer part numbers: less parts stocking required.

MOUNTING BASE FOR PN-150 RELAY

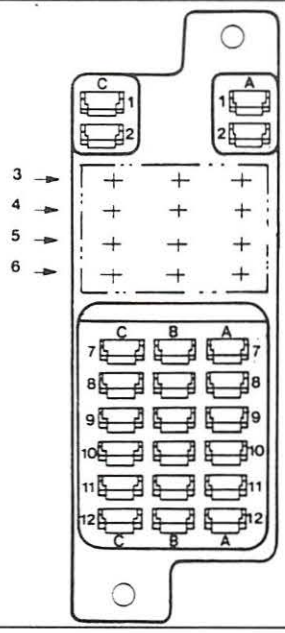

MOUNTING BASE FOR PN-250 RELAY

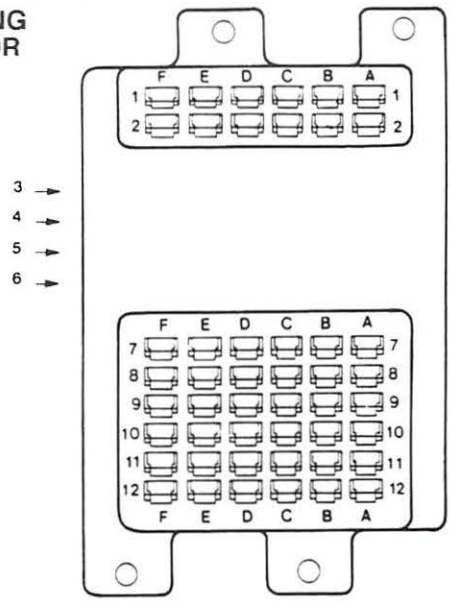

COPYRIGHT 1988, UNION SWITCH & SIGNAL INC.

HOW TO ORDER (Cont'd)

Mounting Bases

PART NO.	DESCRIPTION
N451376-0301	PN-150 wayside mounting base only
N451376-0302	PN-150 wayside mounting base, with hardware
J780055	PN-150 car-carried mounting base only
N451376-0303	PN-150 car-carried mounting base, with hardware
N438689	PN-250 mounting base only, latch facing right
N438689-001	PN-250 mounting base, latch facing right, with hardware
N438689-002	PN-250 mounting base only, latch facing left
N438689-003	PN-250 mounting base, latch facing left, with hardware

Receptacle Contact Springs

NEW PART NO.	DESCRIPTION	OLD PART NO.*
M451142-2702	For wire sizes #14/#16	J680195-0001
M451142-2703	For wire sizes #10/#12	J680195-0002
M451142-2701	For wire sizes #18/#20	J680195

*For reference only.

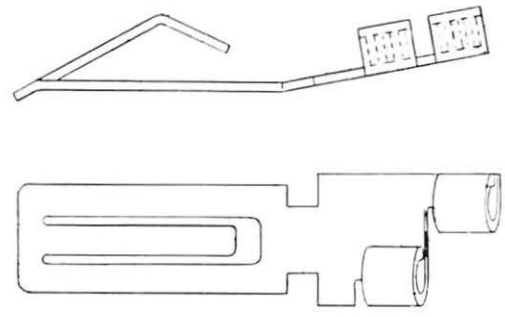

CROSS REFERENCE INDEX

PN-150 Mounting Base

OLD PART NO.	NEW PART NO.	OLD PART NO.	NEW PART NO.
N334266	N451376-0302	X335727-001	N451376-0302
N335727	N451376-0302	X341626-001	N451376-0302
N341626	N451376-0302	X341785-001	N451376-0302
N341785	N451376-0302	X344874-001	N451376-0302
N344874	N451376-0302	X349904-001	N451376-0302
N349904	N451376-0302	X372344-001	N451376-0302
N372344	N451376-0302	X376048-001	N451376-0302
N376048	N451376-0302	X376439-001	N451376-0302
N376439	N451376-0302	X399506-001	N451376-0302
N382273	N451376-0302	X399689-001	N451376-0302
N384259	N451376-0302	X437090-001	N451376-0303
N398314	N451376-0302	X438562-001	N451376-0302
N399506	N451376-0302	X432995-001	N451376-0302
N399689	N451376-0302	X433830-001	N451376-0302
N437090	N451376-0303		
N438562	N451376-0302		
N432995	N451376-0302		
N433830	N451376-0302		
N434814	N451376-0302		
N436797	N451376-0303		
N334266-099	N451376-0301		
N335727-099	N451376-0301		
N341626-099	N451376-0301		
N341785-099	N451376-0301		
N344874-099	N451376-0301		
N349904-099	N451376-0301		
N372344-099	N451376-0301		
N376048-099	N451376-0301		
N376439-099	N451376-0301		
N382273-099	N451376-0301		
N384259-099	N451376-0301		
N398314-099	N451376-0301		
N399506-099	N451376-0301		
N399689-099	N451376-0301		
N437090-099	J780055		
N438562-099	N451376-0301		
N432995-099	N451376-0301		
N433830-099	N451376-0301		
N436797-099	J780055		
X334266-001	N451376-0302		

CROSS REFERENCE INDEX

PN-250 Mounting Base

OLD PART NO.	NEW PART NO.	OLD PART NO.	NEW PART NO.
N349769	N438689-001	X349769-001	N438689-001
N373979	N438689-003	X373979-001	N438689-003
N374117	N438689-001	X374117-001	N438689-001
N376442	N438689-003	X376442-001	N438689-003
N378609	N438689-003	X378609-001	N438689-003
N382814	N438689-003	X382814-001	N438689-003
N382816	N438689-003	X382816-001	N438689-003
N384243	N438689-001	X384243-001	N438689-001
N385205	N438689-001	X385205-001	N438689-001
N385788	N438689-001	X434647-001	N438689-003
N385790	N438689-001	X434650-001	N438689-003
N386458	N438689-003	X438695-001	N438689-003
N434647	N438689-003		
N438695	N438689-003		
N434650	N438689-003		
N349769-099	N438689		
N373979-099	N438689-002		
N374117-099	N438689		
N376442-099	N438689-002		
N378609-099	N438689-002		
N382814-099	N438689-002		
N382816-099	N438689-002		
N384243-099	N438689		
N385205-099	N438689		
N385788-099	N438689		
N385790-099	N438689		
N386458-099	N438689-002		
N434647-099	N438689-002		
N434650-099	N438689-002		
N438695-099	N438689-002		

GRS/SAFETRAN-COMPATIBLE BASE FOR PN-150 SERIES RELAYS

Union Switch & Signal offers a GRS/Safetran-compatible plug-in relay base that allows US&S PN-150 series relays to be mounted within GRS/Safetran relay racks. This base allows front testing while the relay is installed.

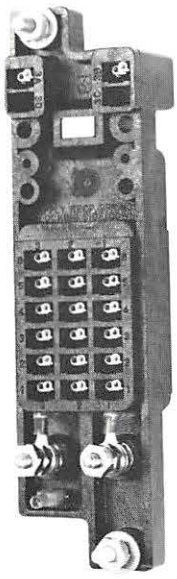

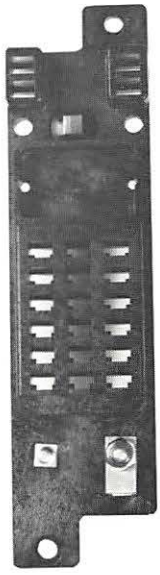

DESCRIPTION

The PN-150 Relay Base is made from a long-lasting, flame resistant, dimensionally stable, black thermoplastic material. The new base has permament molded-in numeric nomenclature to identify columns and rows for relay contact locations, a large receptacle cavity to allow for easy insertion and extraction of relays and contact springs, and its topside contact spring wiring maintains proper alignment. The new design also provides for current or voltage testing from the front, without having to remove the relay.

FEATURES

- The PN-150 Relay Base can be mounted in other supplier's racks without modifications.
- Relays can be current or voltage tested from the front without being removed from rack.
- The base's large receptacle contact cavity allows easier insertion and extraction of contact springs with two (#10 - #12) wires.
- The same receptacle contact springs as in US&S mounting base N451376-0302 are compatible with the new base.
- Numeric contact location nomenclature is permanently molded into the base, and it coincides with nomenclature used by other manufacturers.
- Existing maintenance tools can be used on the new base.
- Kit provides all required hardware.

HOW TO ORDER

Refer to the tabulation below to order the GRS/Safetran-compatible relay base kit. Separate ordering references for the receptacle contact springs and extraction tool are also listed. Make sure to specify quantities for the additional contact springs.

PART NO.	DESCRIPTION
N451376-0601	PN-150 series relay base kit: Includes one base, all required mounting hardware, tags, instructions, full supply of receptacle contact springs for use with #14 to #16 wire.
M451142-2703	Receptacle contact spring (qty = 1) for use with #10 to #12 wire.
M451142-2701	Receptacle contact spring (qty = 1) for use with #18 to #20 wire.
M451142-2702	Receptacle contact spring (qty = 1) for use with #14 to #16 wire (included in kit N451376-0601)
J772383	Extraction tool

COPYRIGHT 1988, UNION SWITCH & SIGNAL INC.

RELAYS, SHELF

GENERAL

General Information for Shelf Relays RSE-5

VITAL SHELF DC LINE RELAYS

Biased RSE-5A1
Neutral RSE-5A2
Slow Dropaway and/or Pickup RSE-5A3
Magnetic Blowout RSE-5A4
Polarized RSE-5A5

VITAL SHELF DC TRACK RELAYS

Biased RSE-5B1
Neutral RSE-5B2
Polarized RSE-5B3

VITAL SHELF SWITCH CONTROL RELAYS

DC Switch Overload RSE-5C1
AC Switch Overload RSE-5C2

VITAL SHELF CODE RELAYS

Code Transmitting RSE-5D1
Code Following RSE-5D2

VITAL SHELF CONTROL RELAYS

Flasher RSE-5E1
Time Element RSE-5E2
Light Out RSE-5E3
Power Off RSE-5E4
Approach Lighting RSE-5E5

SHELF RELAY MOUNTING HARDWARE

Shock Absorbers and Brackets for Shelf Relays RSE-5F1

CROSS REFERENCE INDEX

US&S shelf relays are alphabetically listed below, by type designation. The relay description and catalog section in which the relay appears are shown opposite the relay designation.

RELAY	DESCRIPTION	CATALOG SECTION
CD	Code Following - Ordinary Acting	RSE-5D2
CDP	Code Following - Magnetic Stick	RSE-5D2
DM	Code Transmitting	RSE-5D1
DN-11	Neutral DC Line - Ordinary Acting	RSE-5A2
DN-11	Neutral DC Line - Slow Dropaway	RSE-5A3
DN-11	Neutral DC Track	RSE-5B2
DN-11B	Biased DC Line	RSE-5A1
DN-11B	Biased DC Track	RSE-5B1
DN-11C	Biased DC Line	RSE-5A1
DN-11P	Power Off	RSE-5E4
DN-18	Slow Pickup - Slow Dropaway	RSE-5A3
DN-18C	Code Following	RSE-5D2
DN-19	Slow Dropaway/Slow Pickup	RSE-5A3
DN-19A	Slow Dropaway/Slow Pickup	RSE-5A3
DN-22	Neutral DC Track - Ordinary Acting	RSE-5B2
DN-22A	Neutral DC Line - Ordinary Acting	RSE-5A2
DN-22A	Neutral DC Line - Slow Dropaway	RSE-5A3
DN-22B	Biased DC Track	RSE-5B1
DN-22BH	Biased DC Track - High Dropaway	RSE-5B1
DN-22C	Code Following	RSE-5D2
DN-22L	Light Out	RSE-5E3
DN-22P	Power Off	RSE-5E4
DNL-4	Control - Approach Lighting - Track & Line	RSE-5E5
DP-14	Polarized DC Line - Ordinary Acting	RSE-5A5
DP-14	Polarized DC Track	RSE-5B3
DP-21	Polarized DC Line - Retained Neutral	RSE-5A5
DP-25	Polarized Switch Control	RSE-5A4
DT-10	Time Element	RSE-5E2
FL-28	Flasher	RSE-5E1
FN-16A	Flasher	RSE-5E1
FN-27	Flasher	RSE-5E1
OR-10	Switch Overload (DC)	RSE-5C1
OR-11	Switch Overload (DC)	RSE-5C1
OR-20	Switch Overload (AC)	RSE-5C2
P-4	Code Following - High Efficiency	RSE-5D2
TH-10	Time Element - Thermal	RSE-5E2

VITAL SHELF DC LINE RELAYS

NEUTRAL - DN-11, DN-22A

US&S's DN-11 neutral DC line relay has a broad range of applications in line signal circuits requiring an ordinary acting neutral relay with four, six or eight contacts. The DN-22A is an ordinary-acting neutral relay and is available in a 2-contact configuration. Both the DN-11 and DN-22A can also be used in track circuits.

DESCRIPTION

DN-11 Relay

The DN-11 Relay is available with low voltage and heavy-duty contacts. Contacts are standard: Silver-to-silver-impregnated carbon (S.I.C.) front and silver-to-silver backs. S.I.C. contacts are also available (refer to ordering tabulation). These contacts have a 4 ampere capacity at 30 volts dc or 175 volts ac.

Special heavy duty, low voltage contacts are also available ("H.D". in ordering tabulation). These contacts have a 15 ampere capacity and are S.I.C. front and silver-to-silver back.

The DN-11 Relays contain compound spring contacts that improve back contact performance during vibration. These relays are supplied with shock absorbers for shelf mounting. Wall mounting brackets with shock absorbers are supplied when specified on the order. Connections to the relay can be made directly or through plug couplers that permit quick connection and disconnection.

DN-22A Relay

The DN-22A Relay is available with low voltage contacts only. Like the DN-11, the DN-22A contacts are standard: Silver-to-silver-impregnated carbon front and silver-to-silver backs. S.I.C. contacts are also available. These contacts also have a 4 ampere capacity at 30 volts dc or 175 volts ac.

The armature dead weight torque of the DN-22A Relay exceeds AAR requirements by 50%. Mounting hardware for this relay is the same as the DN-11.

HOW TO ORDER

Order the DN-11 and/or DN-22A Relays from the tabulations on the back of this sheet. Determine the required contacts and coil resistance, then select the proper part number. To expedite the order, specify the contacts and coil resistance with the selected part number.

Each energization voltage shown in the tabulations is the voltage at which that relay assumes the full energized position.

For convenience, the DN-11 Relay tabulations are divided into 4, 6 and 8-contact arrangements. Variations in contacts are shown within each tabulation.

Also specify on the order if wall mounting brackets and/or plug couplers are required.

For additional information on these relays, request the following US&S Service Manuals: 4 and 6-contact DN-11: SM-2444 and SM-2444-Z1. 8-contact DN-11: SM-2444, SM-2444A and SM-2444-Z1. DN-22A: SM-2666.

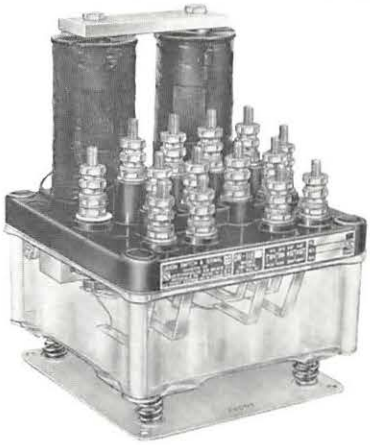

DN-11 RELAY (4-CONTACT)
H = 8-5/8", W = 6-1/4", D = 6-1/4"

DN-11 RELAY (6-CONTACT)
H = 8-5/8", W = 7-5/8", D = 6-1/4"

DN-22A RELAY (2-CONTACT)
H = 8-9/32", W = 4", D = 6-3/8"

COPYRIGHT 1988, UNION SWITCH & SIGNAL INC.

ORDERING REFERENCES

4-CONTACT DN-11 NEUTRAL DC LINE RELAY (ORDINARY ACTING)

PART NO.	CONTACTS	COIL RES. (OHMS)	ENERG. VOLT.	MIN. FULL D.A.	
				AMPS	VOLT.
N213536	4FB Std.	55	1.09	0.0104	0.57
N159679	4FB Std.	60	1.26	0.0100	0.66
N159996	4FB Std.	250	2.61	0.0055	1.38
N157285	4FB Std.	500	3.50	0.0037	1.85
N157187	4FB Std.	1000	5.27	0.0028	2.78
N161396	4FB Std.	1500	6.56	0.0023	3.47
N214333	4FB H. D.	500	5.50	0.0037	1.85
N231336	4F Std.	500	3.50	0.0037	1.95
	2B Std.				
	2B H. D.				
N257117	4FB Std.	175	1.96	0.0059	1.04
N213667	4FB H. D.	670	6.70	0.0033	2.25
N214494	4FB H. D.	1000	8.27	0.0028	3.36
N214711	2FB Std.	1000	5.27	0.0028	3.10
	2FB Special*				

*Special - Contacts are silver-to-S.I.C. fronts and silver backs.

6-CONTACT DN-11 NEUTRAL DC LINE RELAY (ORDINARY ACTING)

PART NO.	CONTACTS	COIL RES. (OHMS)	ENERG. VOLT.	MIN. FULL D.A.
N159871	6FB Std.	500	4.85	2.05
N159864	6FB Std.	670	5.91	2.47
N158263	6FB Std.	1000	7.30	3.10
N160025	6FB S.I.C.	1000	7.30	3.10
N262423	2FB Std.	500	6.45	2.55
	4FB H. D.			
N222664	6FB H. D.	1000	9.70	3.80

8-CONTACT DN-11 NEUTRAL DC LINE RELAY (ORDINARY ACTING)

PART NO.	CONTACTS	COIL RES. (OHMS)	ENERG. VOLT.	MIN. FULL D.A.	
				AMPS	VOLT.
N157353	8FB Std.	670	6.70	0.0041	2.72
N159870	8FB Std.	500	5.50	0.0045	2.23
N161333	8FB Std.	1000	8.27	0.0034	3.36

2-CONTACT DN-22A NEUTRAL DC LINE RELAY (ORDINARY ACTING)

PART NO.	CONTACTS	COIL RES. (OHMS)	ENERG. VOLT.	MIN. FULL D.A.	
				AMPS	VOLT.
N224121	2FB Std.	16	0.44	0.0136	0.217
N224122	2FB Std.	40	0.67	0.0084	0.335
N224123	2FB Std.	60	0.89	0.0074	0.44
N239397	2FB Std.	500	2.50	0.0025	1.25
N224890	2FB Std.	1000	3.76	0.0019	1.88
N224382	2FB Std.	2000	5.55	0.0014	2.78
N251714	2FB H. D.	1000	5.27	0.0028	1.88
N300717*	2FB Std.	2000	6.66	0.0016	3.22
N316906	2F S.I.C.	2000	5.55	0.0014	2.78
	1B				

*Special calibration for use with "UT" timing unit in highway crossing delayed start applications. Relay maximum full drop-away amps = 0.0018, volts = 3.56.

SHOCK ABSORBERS AND BRACKETS FOR SHELF RELAYS

US&S provides a complete line of shock absorbers and brackets to mount shelf relays on a shelf or a wall. The shock absorbers help protect these relays from vibrations that might otherwise damage components or alter performance. Heavy-duty "L" brackets are available to wall mount the relay (on its shock absorber) when shelf space is limited or not available.

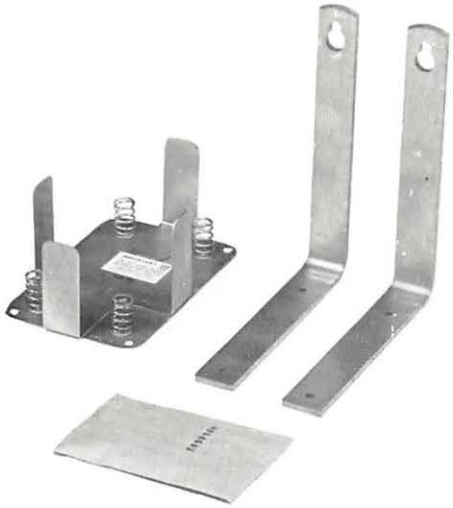

HOW TO ORDER

To order shock absorbers and wall-mount brackets for US&S shelf relays, identify the specific type of relay (i.e. "DN-11", "DN-22") in the tabulation below, then refer to the part numbers for the individual pieces. Note that kits with shock absorber, brackets and fastener hardware are available with many of the more frequently used US&S shelf relays. Contact US&S Sales to order shock absorbers and brackets for any relays not covered in the tabulation. Note: Photo at right shows kit X185131-001. Shock absorber and bracket design varies with different types of relays.

RELAY DESIG.*	PART NO.		
	SHOCK ABSORB.	BRACKET	KIT
CD (2C)	N221662	M221660	
CD (4C)	N221662	M221660	
CDM	N221662	M221660	
CDP	N221662	M221660	
CND	N221662	M221660	
DM	N221662	M221660	X173292-001
DN-11 (4C)	N172589	M199781	
DN-11 (4C), Special:	N223715	M199781	
N150956	N223715	M199781	
N163574	N223715	M199781	
N168295	N223715	M199781	
N212441	N223715	M199781	
N257117	N223715	M199781	
N226309	N223715	M199781	
N261632	N223715	M199781	
N275647	N223715	M199781	
DN-11 (4C, w/R)	N223715	M196402	
DN-11 (6C)	N172590	M199781	X173293-001
DN-11 (6C, w/R)	N223716	M196402	
DN-11 (8C)	N172591	M199781	
DN-11 (8C), SDA	N375124	M199781	
DN-11 (10C)	N172592	M199781	
DN-11B (4C)	N172589	M199781	X173292-001
DN-11B (4C), Special:			
N274065	N223715	M199781	
N280595	N223715	M199781	
DN-11P (4C)	N223715	M196402	
DN-11P (6C)	N223716	M196402	
DN-12 (4C)	N172589	M199781	X173292-001
DN-12 (6C)	N172590	M199781	X173293-001

* "2C", "4C", etc. = 2-Contact, 4-Contact, etc.
"w/R" = With Rectifier "SDA" = Slow Drop Away

RELAY DESIG.*	PART NO.		
	SHOCK ABSORB.	BRACKET	KIT
DN-18 (4C)	N223715	M199781	
DN-18 (6C)	N223716	M199781	
DN-18C (4C)	N223715	M196402	
DN-18C (6C)	N223716	M196402	
DN-19 (4C)	N223715	M199781	
DN-19 (6C)	N223716	M199781	
DN-22	N185129	M199781	X185131-001
DN-22A	N185129	M199781	X185131-001
DN-22A (w/R)	N185129	M196402	
DN-22B	N185129	M199781	X185131-001
DN-22BH	N185129	M199781	X185131-001
DN-22C	N185129	M199781	X185131-001
DN-22C (w/R)	N185129	M196402	
DN-22L	N185129	M199781	X185131-001
DN-22L (w/R)	N185129	M196402	
DN-22P	N185129	M199781	X185131-001
DNL-4	N182823	M182818	
DNL-46	N182823	M182818	
DNL-47	N286354	M286357	
DP-14 (2C)	N172594	M199781	
DP-14 (4C)	N242426	M173279	
DP-14 (6C)	N173413	M173531	
DP-17	N173413	M173531	
DP-17A	N173413	M173531	
DP-20 (4C)	N242426	M173279	
DP-20 (6C)	N242427	M173279	
DP-21 (4C)	N242426	M173279	
DP-21 (6C)	N242427	M173279	
DP-25	N172595	M173279	
DT-10	N242426	M173279	
DX-13	N172593	M173277	
FN-16	N172590	M199781	
FN-27	N280687	M280684	
FN-28	N280687	M280684	
P4	N221663	M221661	
TH-10	M218135	M209709	

COPYRIGHT 1988, UNION SWITCH & SIGNAL INC.

F-85 INVERTER-DRIVER

The F-85 Inverter-Driver is a highly reliable signal generator designed for use in phase selective track circuits or any other application requiring a precise and predictable signal output. It is typically used with the US&S F50-1 Inverter Follower to produce standard signals of 60, 83.3 and 100 Hz over a 9 to 18 supply voltage range. Three models of the F-85 are available, one for each of three standard output signals. Depending upon the application, F-85 units can also be developed with additional frequencies, as specified by the customer.

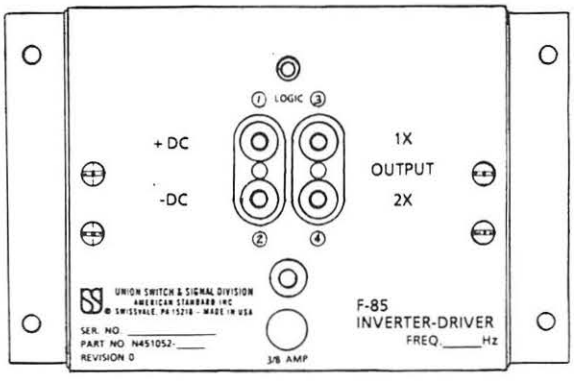

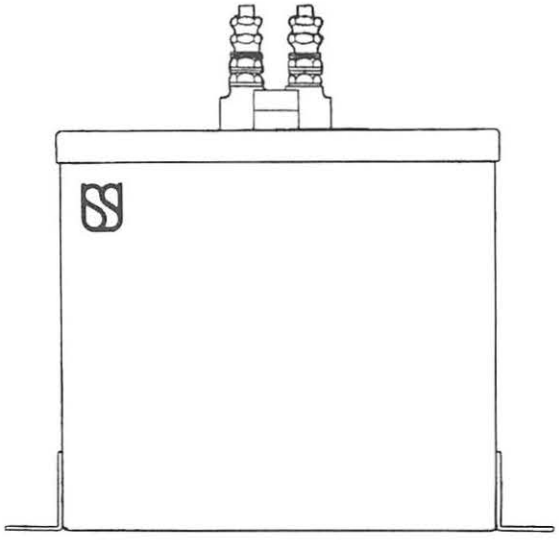

DESCRIPTION

The F-85 Inverter Driver is housed in a 2-piece sheet metal case consisting of a box and cover. Two mounting brackets with 4-1/2" x 8-3/4" hole centers are attached to the sides of the case. Power input and signal output connections are made on four AAR standard terminals on top of the case. The unit's input power fuse is also accessible on the front cover.

The case contains two printed circuit boards, the Logic and Output PCB's, which are hard-wired to the external terminals and fuse. A quartz crystal-controlled ocscillator on the Logic PCB provides the base frequency for the unit's output. Dual countdown stages on this board provide precisely phased signals to the Output PCB. This board contains summing circuits and amplifiers that receive and process the phased outputs from the Logic PCB. An output transformer on the Output PCB yields the desired square wave signal. An on-board fuse (separate from the front-panel power fuse) is used to cut off the output signal in the event of an out-of-tolerance deviation in the signal.

The F-85 is provided as a direct replacement for the F-70 Inverter-Driver (N451034-680__).

SPECIFICATIONS

Unit Dimensions:	9-1/2" x 6" x 9"
Mounting:	Shelf or wall
Power Input:	9.0 to 18.0 Vdc, 12.0 Vdc nom.
Output Frequencies:	60.0 Hz, ± 1.0 Hz (unit-4301) 83.3 Hz, ± 1.0 Hz (unit-4302) 100.0 Hz, ± 1.0 Hz (unit-4303)
Load Impedance:	390 Ohms, nominal.
Output Power:	8.0 volts minimum (16 V P-P) across 390 ohms - 160 milliwatts
Temp. Limits:	-30°F to 160°F.
Reverse Battery Protect.:	Built-in
Breakdown Volt:	3000 volts @ 60 Hz

FEATURES

- State-of-the-art solid state electronics
- Quartz oscillator for high signal accuracy.
- Maintains accurate signal output over wide range of input voltages.
- Comparator circuits, signal line fuse guard against out-of-tolerance output.
- Suitable for many applications requiring high precision signal.

HOW TO ORDER

Order the F-85 Inverter Driver from the parts tabulation below. To obtain units with customized frequencies, contact US&S Sales.

PART NO.	DESCRIPTION
N451052-4301	F-85 Inverter-Driver, 60.0 Hz output.
N451052-4302	F-85 Inverter-Driver, 83.3 Hz output.
N451052-4303	F-85 Inverter-Driver, 100.0 Hz output.

PRINTED IN USA

UNION SWITCH & SIGNAL DIVISION
AMERICAN STANDARD INC. / PITTSBURGH, PA 15237

RSE-7C3
1/87

COPYRIGHT 1987, US&S DIVISION OF AMERICAN STANDARD INC.

TRAIN DETECTION SYSTEMS

TRACK CIRCUITS

Type "C" Track Circuits RSE-8C1
AFO-IIC Audio Frequency Overlay Equipment RSE-8D1
ATT-10 Audio Track Transceiver RSE-8D2
AFO-I Audio Frequency Overlay Equipment RSE-8D3
Surge-Ripple Filter RSE-8D4
Audio Frequency Transit T. C. System RSE-8D5
High Frequency Track Circuit (Yard Application) RSE-8E1
AW-10 Directional Area Warning Device (Grade Cross.) RSE-8E2
FR-HI Shunt Track Circuit (Yard Application) RSE-8F1
MICROCODE-I and MICROCODE-II RSE-8G1
TRU-II and TRU-II Code Reset Module RSE-8N1
Phase Selective Unit RSE-8N2

DETECTION EQUIPMENT

WD-30 and WD-30D Wheel Detectors RSE-8H1
ACCUTECT Wheel Detector RSE-8H2
PM-10 Presence Monitor RSE-8J2
Electrocoder EC-10 Code Generator RSE-8K2
Impedance Bonds, AC and DC RSE-8M1

ATT-20 AUDIO TRACK TRANSCEIVER

The ATT-20 Audio Track Transceiver is a highly reliable AF track circuit device that operates in the audio frequency range of 12 to 20 Khz. This high AF range helps provides sharp block definition in applications such as highway crossings, island circuits, switch lock release and general train detection. Unlike previous ATT series units, the ATT-20 can be used in both non-electrified and dc-electrified territories. It is also less susceptible to sources of EMI such as hand-held radios. In most applications insulated joints are not required and track circuits up to 300 feet long can be realized. The series mode version of the ATT-20 has reduced sensitivity to changes in ballast conditions compared to previous ATT models.

DESCRIPTION

The ATT-20 is provided in two specific units, the Series Mode unit and the Shunt Mode unit. Neither unit can be used for the alternate application.

Each ATT-20 is a single-unit transceiver containing separate transmitter and receiver printed circuit boards. These are mounted on a common chassis. In turn, the chassis is housed in an assembled sheet metal case. External wiring and jumpers are connected to eight AAR terminals on the unit's front cover. Internal wiring is run to these terminals through a single, grommet-lined hole. On the shunt mode version of the ATT-20, the front cover contains a hole that allows access to a recessed screw (slotted type) for adjusting the relay operating voltage level (transmitter output).

Both the transmitter and receiver circuit boards in the ATT-20 are equipped with analog circuits. The transmitter produces an output signal that is in the high audio frequency range and is sinewave modulated to provide noise immunity. The receiver detects the modulation information, then amplifies and rectifies this signal to provide the required dc output. This output is used to drive an external relay coil.

FEATURES

- Low power requirements
- Compact, easy-to-install unit
- Meets AAR requirements
- Reliable solid-state components
- Ideal for short range applications
- Applicable to non-electrified or dc-electrified territories
- Less susceptible to EMI and effects of changing ballast

SPECIFICATIONS

Dimensions:	8-3/16" H x 4-11/16" W x 9-1/4" L
Power Input:	Range: 9.8 to 15.2 Vdc Maximum ripple: 1 volt P-P Load current: 600 mA Fuse: 3/4 amp fast blow
Transmitter:	Shunt mode output voltage: 1.0 Vrms (modulated) into 5 ohm load
	Series mode output voltage: 0.25 Vrms (modulated) into 1-ohm load
	Operating frequencies available with standard units: 12.28 KHz, 15.0 KHz, 20.0 KHz
	Carrier frequency tolerance: ± 0.5%
	Modulation frequency (all units): 390 Hz, ± 0.5%
	Harmonic output: -30 dB ar 2nd harmonic with 12 ohm load in shunt mode
	Output Impedance, series mode: 7 ohms Shunt mode: 1 ohm
Receiver:	Sensitivity: 70 mV rms (modulated signal) ± 14 mV
	Input imepdance, series mode: 7 ohms Shunt mode: 1 ohm
	Output voltage: 7.65 Vdc into 400 ohms
Max. Block Length:	300 ft., shunt mode @ 3 ohm/1000 ft. ballast 150 ft. series mode @ 3 ohm/1000 ft. ballast
Temp. Range:	-40°C to + 70°C

HOW TO ORDER

Order the ATT-20 from the parts tabulation at the right. For new installations of this unit, also request Service Manual SM-6299 or consult with US&S Sales. The manual also gives a detailed parts listing and applications for the unit. Note: The ATT-20 may be ordered as a direct replacement for the ATT-10. However, make certain to order either the shunt mode or series mode version of the ATT-20 to replace the corresponding application of the ATT-10. The series and shunt mode versions of the ATT-20 are not interchangeable in their application.

PART NO.	FREQUENCY	APPLICATION
N451052-3901	12.28 KHz	Shunt
N451052-3902	15.0 KHz	Shunt
N451052-3903	20.0 KHz	Shunt
N451052-3904	12.28 KHz	Series
N451052-3905	15.0 KHz	Series
N451052-3906	20.0 KHz	Series

PRINTED IN USA

UNION SWITCH & SIGNAL DIVISION
AMERICAN STANDARD INC. / PITTSBURGH, PA 15237

RSE-8D2
REV. 1/87

COPYRIGHT 1987, US&S DIVISION OF AMERICAN STANDARD INC.

SURGE RIPPLE FILTER

The Surge Ripple Filter provides dependable and long-lasting protection for many classes of electronic equipment such as audio frequency overlay devices. It guards against lightning and other types of power surges, and also aids in reducing voltage ripple caused by battery chargers. This particular unit improves upon previous filters with its solid-state transient voltage suppressor, and new redundant capacitive filter circuit. As a result, the new Surge Ripple Filter works with unprecedented reliability.

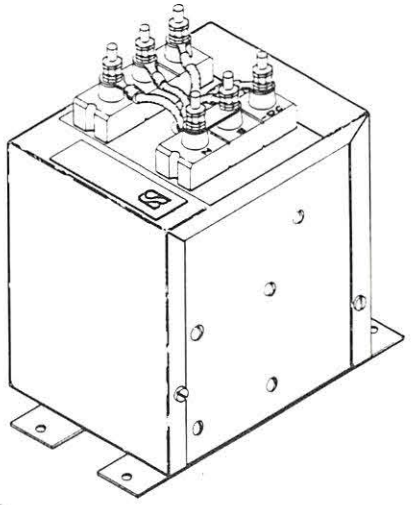

DESCRIPTION

The Surge Ripple Filter consists of four internally mounted components, including an inductor, a Transzorb and two 4-lead electrolytic capacitors. These components are housed in an assembled sheet steel box. The reactor is mounted directly to the inside of the box, while the remaining components are mounted on a separate internal circuit board. All external circuit connections are made on six AAR standard terminals on the top of the box. Unit mounting (wall, shelf or rack) is accomplished with four tabs and holes on 2-1/2" x 7-5/16" centers.

Ripple reduction is accomplished with a simple LC circuit consisting of the inductor and the two capacitors. The capacitors are placed in a redundant configuration to insure filtering should one of them fail.

Transient voltage suppression is accomplished with the inductor, the Transzorb and an externally mounted lightning arrester (not included with the unit; refer to RSE-17A1 for ordering). When a voltage transient arrives at the input of the Surge Ripple Filter, the inductor opposes the change in the current and thus causes a rapid voltage rise across the battery terminal connections. Once this voltage exceeds the breakdown voltage of the lightning arrester, the arrester begins to conduct, thus preventing an increase in the output voltage of the unit. A transient below the firing threshold of the arrester is still delayed by the inductor, allowing a slower rise of voltage across the Transzorb. Upon reaching the breakdown voltage of the Transzorb, this component begins to operate as an avalanche diode and becomes a short circuit, thus protecting the rest of the circuit. The Transzorb also clamps rapid transients that are capacitively coupled through the inductor.

FEATURES

- Protects electronic equipment from damaging transient voltages and ripple interference.
- Solid-state components minimize maintenance and insure long service life.
- Transzorb and redundant capacitor circuit further enhance reliability.
- Compact unit mounts on wall, shelf or rack.
- Meets AAR requirements.

SPECIFICATIONS

Unit Dimensions:	7-15/16" x 4-15/16" x 6-3/16"
Unit Weight:	9 lbs.
Applied Voltage:	20V (dc + peak ripple component), max.
Load Current:	2.5A, max.
Insertion Loads:	Drops nearly 1V at full 2.5A
Temp. Range:	-40°C to +70°C

HOW TO ORDER

Order the Surge Ripple Filter with the part number listed below. Make certain the application does not exceed the 2.5 amp current limit for the unit. This unit is a direct replacement for units N451036-0701 and N451036-0702. Request Service Manual 6265 for a detailed parts listing.

PART NO.	DESCRIPTION
N451590-0301	Surge Ripple Filter, 2.5A load

PRINTED IN USA

UNION SWITCH & SIGNAL DIVISION
AMERICAN STANDARD INC. / PITTSBURGH, PA 15237

COPYRIGHT 1987, US&S DIVISION OF AMERICAN STANDARD INC

ACCUTECT™ WHEEL DETECTOR

ACCUTECT is an advanced, solid-state device that provides efficient wheel detection in classification yards or any application where wheel detection is needed. The compact detector unit is easy to install, rugged and provides years of maintenance-free service.

DESCRIPTION

The ACCUTECT Wheel Detector is a component of a system, consisting of a detector head, mounting hardware, an office-installed printed circuit board (PCB) and interconnecting cabling. The detector head is a single molded unit containing a Hall Effect sensor and electronics for signal transmission. There are no field electronics between the detector and the office PCB, and the two can be separated by up to 5000 feet. ACCUTECT is temperature compensated over a temperature range of -40°C to +70°C. No recalibration is required.

The unit's detector head operates from the magnetic disturbance caused by the passing wheel flange. Signals are generated when this disturbance occurs, and then transmitted to the office PCB. The PCB conditions the signals for acceptance and processing by the office control circuits. Detection accuracy is independent of wheel diameter. The unit is capabale of detecting wheels at car speeds of up to 125 miles per hour.

ACCUTECT can be mounted with clamps that attach to the base of the rail, or by bolting directly to the webb (drilling required). The rail mounting holes for the older WD-30 Detector can also be used to mount ACCUTECT. No rail drilling is required for the clamp installation. The improved clamps feature heavy-duty hooks with a deep "V" profile that grips more than twice as much of the rail base as previous clamps. These clamps also allow installation of ACCUTECT on all sizes of rail.

The clamp-to-angle head mounting on ACCUTECT allows removal of the detector without removal of the clamp assembly from the rail. Stainless steel mounting bolts are used to minimize corrosion. The field signal cable is attached to the unit with a water-tight connection.

APPLICATION

ACCUTECT may be used in any railroad application requiring wheel detection. It can be ordered as a direct replacement for US&S's WD-30 Wheel Detector. Retrofit of the detector does not require changes in the office electronics, and the electronics in the WD-30 junction box can be eliminated. However, a wiring junction box may be required for field cable termination. Or, cables may be terminated with an undeground splice. The ACCUTECT Detector requires an 24 Vdc (nom.) power source. A rectifier/filter PCB (refer to ordering tab.) is available for junction box or case installation to convert 115 Vac to 24 Vdc. Direction-of-travel sensing may be accomplished by applying three ACCUTECT units in a single system.

FEATURES

- High accuracy
- Detects wheels at cars speeds up to 125 miles per hour
- Easy to install or replace
- Clamps fit all rails, allow replacement of detector only
- Long service life
- Temperature compensated (-40°C to +70°C)
- Direct replacement for US&S's WD-30
- No intermediate field electronics required

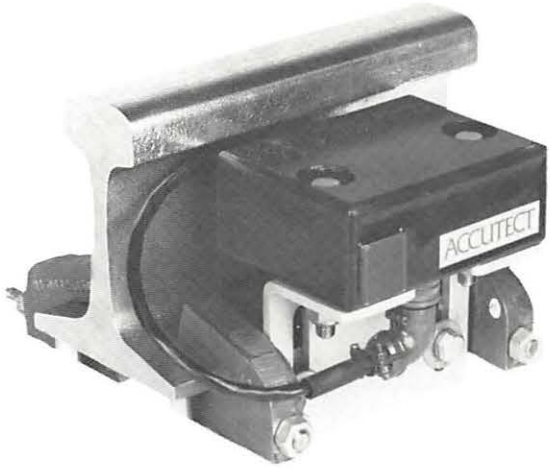

HOW TO ORDER

Order ACCUTECT as part of a complete clamp-on or bolt-on installation kit (refer to tabulation below). A clamp-on retrofit kit is available to convert old style rail mounting clamps to the improved version. Also, a bolt-on retrofit kit is available to convert old or new clamp-on installations to the bolt-on type. If planning a new system employing ACCUTECT, contact US&S Sales before ordering any units. This will help ensure efficient and cost-effective utilization of equipment. Order replacement parts for ACCUTECT from the tabulations on the back of this sheet.

PART NO.	DESCRIPTION
X451062-6601 (Replaces old X451062 5101)	ACCUTECT Wheel Detector, Clamp-On Kit: Detector head, clamp assembly, angle head, all required hardware.
X451062-6602	Clamp-On Retrofit Kit: Same components as kit -6601 (above), minus detector head and detector-to-angle head hardware.
X451062-5301	ACCUTECT Wheel Detector, Bolt-On Kit: detector head, mounting plate, all required hardware.
X451062-5202	Clamp-On to Bolt-On Retrofit Kit: Same components as kit -5301 (above), minus detector head and detector-to-angle head hardware.
N451605-7201	AC/DC PCB
N451054-5401	Interface Logic PCB
N451054-7901	Interface Logic PCB
N451054-9701	Interface Logic PCB
N451054-9702	Interface Logic PCB
N451458-4801	6 ft.
N451458-4802	8 ft.
N451458-4803	10 ft.
N451458-4804	12 ft.
N451458-4805	15 ft.
N451458-4806	20 ft.
N451458-4807	25 ft. Detector Field Cabling
N451458-4808	30 ft. (Other lengths available upon
N451458-4809	35 ft. request; contact US&S Sales).
N451458-4810	40 ft.
N451458-4811	45 ft.
N451458-4812	50 ft.
N451458-4813	75 ft.
N451458-4814	100 ft.

COPYRIGHT 1988, UNION SWITCH & SIGNAL INC.

REPLACEMENT PARTS

ACCUTECT CLAMP-ON KIT X451062-6601 (REPLACES X451062-5101)

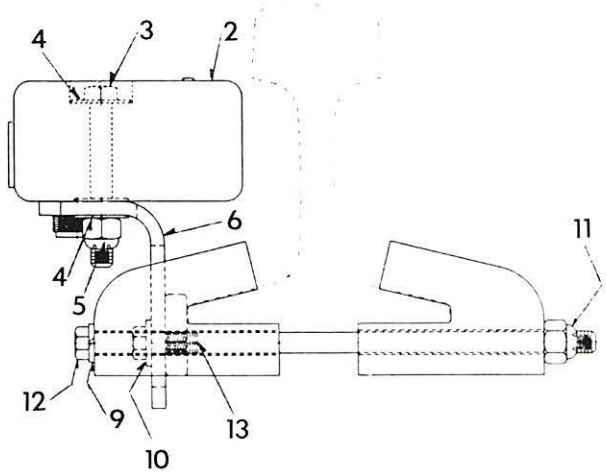

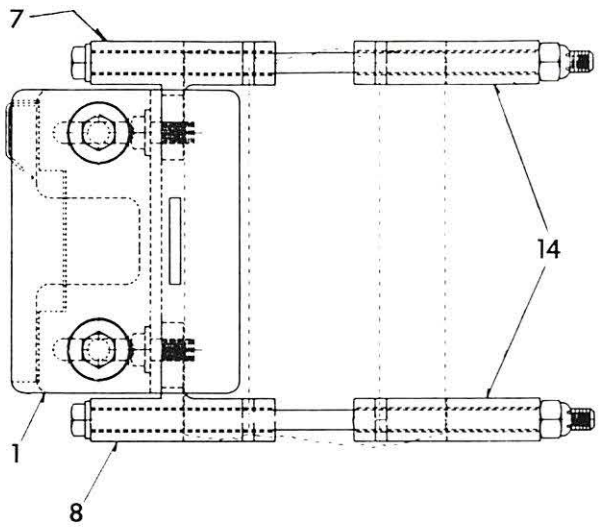

REF.	PART NO.	DESCRIPTION
1	X451062-4902	Wheel Detector Assembly
2	N451062-4901	Electronics Unit (Note 1)
3	J465010	Bolt, 1/2-13 Hex, SS (Note 1)
4	J475120-0116	Washer, 1/2" Plain Flat (Note 1)
5	J480169	Nut, 1/2-13 Brass (Note 1)
6	M451062-4602	Angle Head
7	M451062-6402	Clamp, Right-Hand
8	M451062-6502	Clamp, Left-Hand
9	J475193	Washer, 1/2" Lock, Steel
10	J475120-0116	Washer, 1/2" Plain Flat
11	J480169	Nut, 1/2-13 Brass
12	J046230	Bolt, 1/2-13 x 12. Hex Head
13	J500083-0124	Screw, 1/2-13 x 1-1/2, Stainless Steel
14	M451062-6504	Clamp, Plain

Notes (1) Included under Ref. 1 part number.

ACCUTECT BOLT-ON KIT X451062-5301

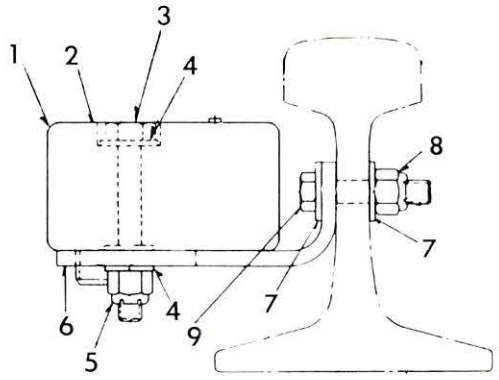

REF.	PART NO.	DESCRIPTION
1	X451062-4902	Wheel Detector Assembly
2	N451062-4901	Electronics Unit (Note 1)
3	J465010	Bolt, 1/2-13 Hex, SS (Note 1)
4	J475120-0116	Washer, 1/2" Plain Flat (Note 1)
5	J480169	Nut, 1/2-13 Brass (Note 1)
6	M451062-4402	Plate, Retrofit Mounting
7	J475120-0116	Washer, 1/2" Plain Flat
8	J480169	Nut, 1/2-13 Brass
9	J465017-0120	Bolt, 1/2-13 x 2-1/2, Stainless Steel

Notes (1) Included under Ref. 1 part number.

INTERFACE CABLE ASSEMBLY N451458-48XX

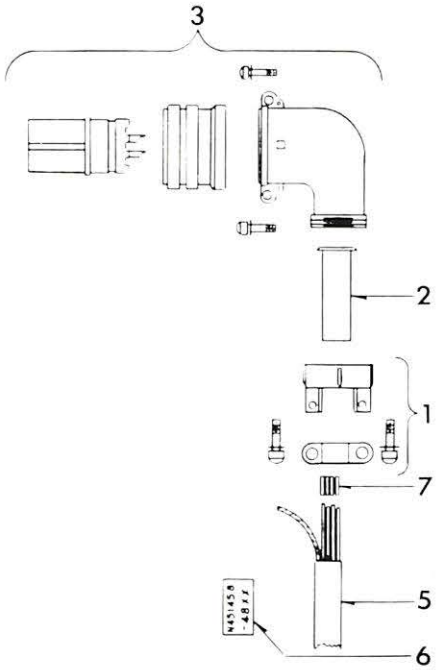

REF.	PART NO.	DESCRIPTION
1	J706729	Cable Clamp
2	J750078	Rubber Bushing
3	J709146-0284	Plug Connector, 90°
4	J041701	Sealant
5	A045828	Cable, 4-Conductor #16, Shielded
6	J792822-0003	Marker, Wire Sleeve
7	A774199	Tubing

TRU-II TRACK CIRCUIT AND TRU-II CODE RESET UNIT

TRU-II is a 2-element track resonant unit for steady energy track circuit application in 25 Hz or 60 Hz ac propulsion territory. It is a direct replacement for existing centrifugal relays. The TRU-II Code Reset Unit adapts the TRU-II Track Circuit to single or double-direction code overlay track circuit applications. It resets the coded track signal to the desired steady energy condition. Both units are highly reliable and provide long operating life.

DESCRIPTION

TRU-II Track Circuit Unit

The TRU-II Track Circuit Unit consists of an assembled sheet metal housing that can be attached to standard equipment rack relay mounting bars. Electronic components are contained in three independent, hard-wired modules that can be individually replaced during bench maintenance. Wiring to external circuits is plug-connected to an 8-pin male plug on the rear of the unit.

The TRU-II Track Circuit Unit is provided in three basic models:

- 100 Hz-only unit
- Combination 91.67/100 Hz unit set to 91.67 Hz
- Combination 91.67/100 Hz unit set to 100 Hz.

The second and third models are set at the factory to the indicated frequnecies, but can be changed in the field to the alternate frequency. This is done by changing taps, allowing easy track circuit conversion when changing from 25 to 60 Hz propulsion systems. A reversible label on the unit shows either selected frequency.

In operation, the TRU-II Track Circuit Unit energizes its track (output) relay so long as the track circuit is unoccupied and operating properly. Track occupancy or a system failure causes TRU-II to release the track relay.

TRU-II Code Reset Module

The TRU-II Code Reset Unit is also contained in an assembled, sheet metal case designed for relay rack mounting. Its electronics are contained on a single "Shelf Assembly" with built-in printed circuit board. External wiring is also plug-connected to an 8-pin male plug on the rear of the unit.

In a code overlay application, the TRU-II Code Reset Unit is connected in parallel to the TRU-II Track Circuit output and assists the energizing of the track relay during the code reset period. The degree of assist is proportional to the steady state TRU-II output during the reset.

Associated Equipment

In a typical installation with cab code overlay, the TRU-II Track Circuit Unit and Code Reset Module are mounted in a "Mini-Rack", which is designed for shelf mounting (see photo at upper right). These racks are useful for accomplishing wire-for-wire replacement of a shelf-mounted centrifugal relay. Each rack also contains a PN-150BH relay for the TRU-II Track Circuit Unit output and a PN-150B or PN-250B relay, which serves as a repeater. The TRU-II Code Reset module is not required when code overlay is not in effect.

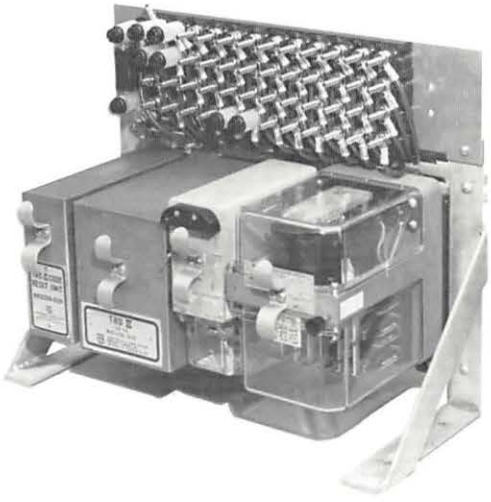

Typical TRU-II Mini-Rack Installation (L to R): TRU-II Code Reset Module, TRU-II Track Circuit Unit, PN-150BH Relay (output), PN-250B Relay (repeater)

Mini-racks are available from US&S with various standard combinations of the TRU-II Track Circuit Unit, Code Reset Module and track relays (refer to ordering information). New style plug-in relay bases with installed receptacle spring contacts are mounted on the mini-rack.

FEATURES

TRU-II Track Circuit Unit:

- Track circuit length, shunting constraints and broken down insulated joint protection comparable to phase selective and centrifugal relay systems
- Operates on 25 Hz or 60 Hz propulsion systems
- Can also be used in dc territory
- Direct replacement for centrifugal relays; minimal field retrofit work required
- Lower power consumption than centrifugal relays
- Excellent noise rejection capability
- Provides high degree of lightning protection, surge immunity
- Rugged construction
- No active electronics, no moving parts
- No periodic maintenance required
- Rack or shelf-mount; plug couplers for easy replacement

TRU-II Code Reset Module:

- No track circuit voltage boost required during code reset period
- Guards against false relay pick-up
- Operates on 25 Hz or 60 Hz propulsion systems
- Provides high degree of lighting protection
- Durable design - no transistors or electrolytic capacitors
- No periodic maintenance required
- Rack or shelf-mount; plug couplers for easy replacement

COPYRIGHT 1988, UNION SWITCH & SIGNAL INC.

SPECIFICATIONS

TRU-II Track Circuit Unit:

Dimensions:	H = 8", W = 4-15/16", D = 9-1/2"
Mounting:	Standard relay rack
Local Voltage:	110 or 120 Vac, ±10%
Local Current:	50 mA range
Track Voltage:	10 Vac range
Track Current:	100 mA range
Dielectric Breakdown Voltage:	3000 V, 60 Hz for 1 minute
Operating Temperature Range:	-40°C to +70°C
Traction Power Environment:	DC to 60 Hz AC
Harmonic Immunity:	91.67 Hz unit immune to 100 Hz (4th harmonic of 25 Hz traction power)

TRU-II Code Reset Module:

Dimensions:	H = 8", W = 2-3/8", D = 9-1/2"
Mounting:	Standard relay rack
Local Voltage:	110 or 120 Vac, ±10%
Local Current:	50 mA range - with required external 1K noise suppression resistor, 165 mA range.
Dielectric Breakdown Voltage:	3000 V, 60 Hz for 1 minute on terminals 1 and 2 to chassis only
Operating Temperature Range:	-40°C to +70°C
Traction Power Environment:	DC to 60 Hz AC
Harmonic Immunity:	91.67 Hz unit immune to 100 Hz (4th harmonic of 25 Hz traction power)
Code Rate:	180 code, maximum
Coder On/ Coder Off Time:	38%, minimum

HOW TO ORDER

Order individual units used in TRU-II Track Circuit systems from the tabulations below. Note that the TRU-II Track Circuit Units and Code Reset Modules are available with mounting plates for installation on rack relay mounting bars.

Basic mini-racks with and without PN-150 and PN-250 plug-in relay bases are also provided to allow customer assembly of TRU-II track circuits. These are listed in the tabulation at the right. Complete TRU-II systems mounted in mini-racks are listed on page 3. Contact US&S Sales for special TRU-II applications not covered in this catalog.

TRU-II BASIC UNITS

PART NO.	DESCRIPTION			
	TRU-II MODEL	AVAIL. FREQ.	FREQ. SET TO	MTG. PLATE
N451206-0101	Track Ckt.	100 Hz	100 Hz	W/O
N451206-0102	Track Ckt.	100 Hz	100 Hz	W
N451206-0103	Track Ckt.	91.67 Hz & 100 Hz	91.67 Hz	W/O
N451206-0104	Track Ckt.	91.67 Hz & 100 Hz	91.67 Hz	W
N451206-0105	Track Ckt.	91.67 Hz & 100 Hz	100 Hz	W/O
N451206-0106	Track Ckt.	91.67 Hz & 100 Hz	100 Hz	W
N451206-0201	Code Reset	100 Hz	100 Hz	W/O
N451206-0202	Code Reset	100 Hz	100 Hz	W
N451206-0203	Code Reset	91.67 Hz & 100 Hz	91.67 Hz	W/O
N451206-0204	Code Reset	91.67 Hz & 100 Hz	91.67 Hz	W
N451206-0205	Code Reset	91.67 Hz & 100 Hz	100 Hz	W/O
N451206-0206	Code Reset	91.67 Hz & 100 Hz	100 Hz	W

RELAYS

PART NO.	DESCRIPTION
N322511-003	TRU-II Track Relay, PN-150BH
N322500-802	TRU-II Repeater Relay, PN-150B
N322554-802	TRU-II Repeater Relay, PN-250B

BASIC MINI-RACKS - NO TRU-II UNITS OR RELAYS

PART NO.	DESCRIPTION				
	DIM. "A"	T.S.* QTY.	150 BASE QTY	250 BASE QTY	RACK LAYOUT**
N451604-0101	14"	4	0	0	--
N451604-0102	16"	4	0	0	--
N451604-0103	14"	3	0	0	--
N451604-1002	14"	4	1	1	Track Ckt. PN-150 (Qty 1) PN-250 (Qty 1)
N451604-1102	16"	4	1	1	Track Ckt. Code Reset PN-150 (Qty. 1) PN-250 (Qty. 1)
N451604-1202	14"	3	2	--	Track Ckt. PN-150 (Qty. 2)
N451604-1302	14"	3	2	--	Track Ckt. Code Reset PN-150 (Qty. 2)

* Terminal strips
** Intended configuration of TRU-II units and relays

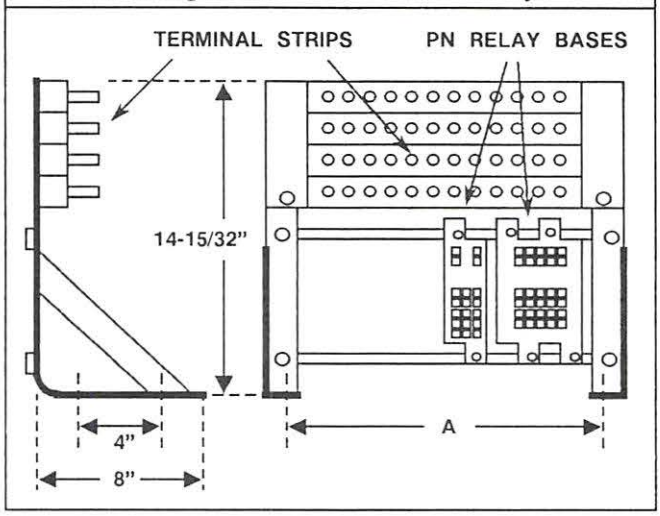

COMPLETE TRU-II RACK ASSEMBLIES

REF.	PART NO.	DESCRIPTION							
		TRU-II TRACK CKT.		TRU-II CODE RESET		TRACK RELAY PN-150BH	REPEATER RELAY		MINI-RACK PART NO.
		N451206-	FREQ.	N451206-	FREQ.		PART NO.	TYPE	
A	X451604-1001	-0101	100 Hz	--	--	N322511-802	N322544-802	PN-250B	N451604-1002
A	X451604-1003	-0103	91.67 Hz*	--	--	"	N322544-802	PN-250B	N451604-1002
A	X451604-1004	-0105	100 Hz*	--	--	"	N322544-802	PN-250B	N451604-1002
B	X451604-1101	-0101	100 Hz	-0201	100 Hz	"	N322544-802	PN-250B	N451604-1102
B	X451604-1103	-0103	91.67 Hz*	-0203	91.67 Hz*	"	N322544-802	PN-250B	N451604-1102
B	X451604-1104	-0105	100 Hz*	-0205	100 Hz*	"	N322544-802	PN-250B	N451604-1102
C	X451604-1201	-0101	100 Hz	--	--	"	N322500-802	PN-150B	N451604-1202
C	X451604-1203	-0103	91.67 Hz*	--	--	"	N322500-802	PN-150B	N451604-1202
C	X451604-1204	-0105	100 Hz*	--	--	"	N322500-802	PN-150B	N451604-1202
D	X451604-1301	-0101	100 Hz	-0201	100 Hz	"	N322500-802	PN-150B	N451604-1302
D	X451604-1303	-0103	91.67 Hz*	-0203	91.67 Hz*	"	N322500-802	PN-150B	N451604-1302
D	X451604-1304	-0105	100 Hz*	-0205	100 Hz*	"	N322500-802	PN-150B	N451604-1302

* Refer to "TRU-II BASIC UNITS" tabulation on page 2 for combination-frequency units.

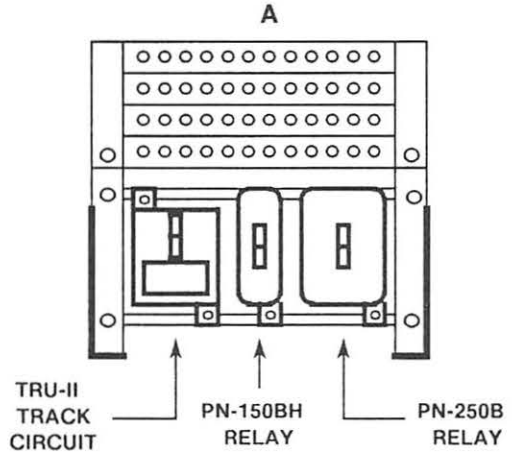

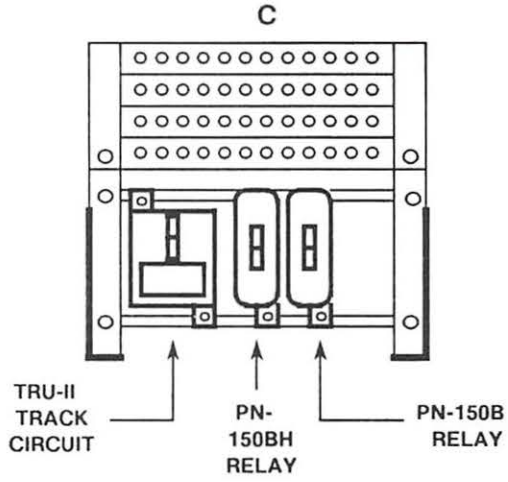

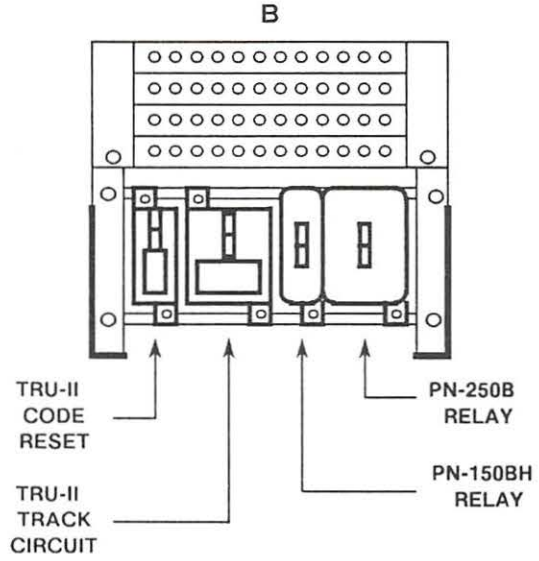

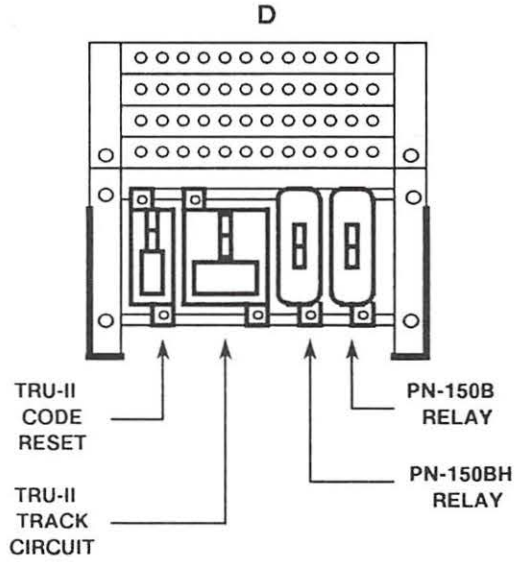

PHASE SELECTIVE UNIT

US&S's 91.67-100 Hz Phase Selective Unit (PSU) is a highly reliable device for driving code-following relays in power frequency track circuits. It eliminates the need for line wires and/or signal cables, and directly replaces the larger, more expensive centrifugal vane relays used in this application. The PSU is also more immune to traction currents than centrifugal relays. It may be employed in 25 or 60 Hz propulsion territories and set to 91.67 or 100 Hz carrier frequency by simply changing connections on the unit's wiring terminals.

OPERATION

The PSU operates from a continuous "Local" signal and a coded "Track" signal that is phase-corrected and filtered at the carrier frequency. The unit compares the phase and amplitude of the coded signal to the local signal. These two signals are synchronized and must have the proper phase relationship to allow the unit to drive the code-following relay. When the relay is operating, the track is not occupied and the system is operating properly. Track occupancy or a system failure will cause the relay to stop coding.

DESCRIPTION

The PSU is housed in an assembled sheet metal case with two lugs that allow installation on standard equipment rack relay mounting bars. Shelf or wall mounting is also possible. Track, power and relay connections are made on 12 AAR terminals on the front of the unit. These terminals are also used to select 91.67 Hz or 100 Hz carrier frequency operation.

Electronic components of the PSU include transformers to couple through the track and local signals, bridge rectifiers to produce DC voltages from the transformer secondaries, and a reactor and capacitor (tuned filter) that establishes operation at the selected carrier frequency.

The most recent PSU incorporates several improvements over older models. These include better internal stabilization of the local input voltage and an improved means of adjusting to phase angle changes that maintains tuning frequency accuracy. Adjustment is done by adding capacitance in series with the primary of the local transformer. Four capacitance values are available by choosing taps and changing the position of one jumper (each capacitor separately, the series combination and the parallel combination). This allows adjustment for the standard range of track circuit lengths (100 ft. to 6000 ft.).

SPECIFICATIONS

Local Voltage:	120 Vac rms $\pm$5%
Operating Frequency:	91.67 Hz or 100 Hz
Dielectric breakdown voltage:	3000V, 60 Hz for 1 minute
Temperature Range:	-40°C to +70°C
Dimensions:	H = 7-15/16" W = 4-15/16" D = 8-1/4"
Mounting:	Standard equipment rack, shelf or wall.

FEATURES

- Replaces large, expensive centrifugal vane relays
- Eliminates line wires and/or signal cables
- Greater traction current immunity than centrifugal relays
- Compatible with cab signal system
- Works with a wide range of code rates
- Highly reliable service record
- May be used in 25 or 60 Hz territories
- Easily selectable 91.67 or 100 Hz carrier frequency
- Equipment rack, shelf or wall-mount
- Improved input voltage stability, phase shift adjustment

HOW TO ORDER

Order the 91.67-100 Hz PSU from the tabulation below. Note that the tabulation also includes part numbers for the older Phase Selective Units to enable unit replacement at existing installations, and code-following relays typically used in Phase Selective track circuits. Refer to RSE-7D1 for W-400 Track Transformer ordering.

Contact US&S Sales for special Phase Selective Units track circuit applications (i.e. 50 Hz propulsion).

PART NO.	DESCRIPTION
N451590-0101	91.67-100 Hz Phase Selective Unit for AC Coded Track
N384378-004	100-200 Hz Phase Selective Unit for AC Coded Track
N384376-003	100 Hz Phase Selective Unit for AC Coded Track
N322559-014	PC-250P, Plug-In Code Following Relay (option)
N322559-018	PC-250P, Plug-In Code Following Relay (option)
N382761	CDP, Shelf Code Following Relay (option)
N437217	CDP, Shelf Code Following Relay (option)

COPYRIGHT 1988, UNION SWITCH & SIGNAL INC.

HOUSES, CASES AND JUNCTION BOXES

HOUSES AND CASES

HM-II Equipment Houses RSE-9A1
CS-II Equipment Cases RSE-9B1

JUNCTION BOXES AND FOUNDATIONS

Pedestal Mounted Junction Boxes RSE-9C1
Junction Box Bases RSE-9C2
Bootleg RSE-9C4
Foundation Piers RSE-9D1

GRADE CROSSING PROTECTION

GRADE CROSSING WARNING ASSEMBLIES

Flashing Signal Light Assembly RSE-10A1
Flashing Signal Light Assembly with Model 75 Cross. Gate. . . RSE-10A2
Gate Assembly with Stub Mast RSE-10A3
Grade Crossing Cantilever Assembly RSE-10A4

GRADE CROSSING WARNING EQUIPMENT

Grade Crossing Masts RSE-10B1
Junction Box Bases for 4 and 5 Inch Masts RSE-10B2
Grade Crossing Signs RSE-10B3
Grade Crossing Bell BA-10 . . . . . RSE-10B4
Flashing Light Assemblies RSE-10B5
Junction Box Cross Arms, XA-120 . . . . . RSE-10B6
Signal Light Units, HC-120A, HC-100 . . . . . RSE-10B7
Gate Mechanism and Components, Model 75 . . . . . RSE-10B8
Aluminum and Fiberglass Crossing Gate Arms RSE-10B9
Adapter Bracket for Crossing Gate Arms RSE-10B10
HC-10 Illuminated Sign Assembly RSE-10B11

FOUNDATIONS

Crossing Signal and Cantilever Foundations RSE-10F1

FLASHING LIGHT SIGNAL ASSEMBLY

US&S offers a complete grade crossing flashing signal light assembly for use in either 2-way or 1-way traffic approach signaling. The high quality optical system of the light units meets the needs of modern high speed highways, and surpasses AAR light output specifications. Signs feature Scotch-Lite® backgrounds with choice of engineering grade or high intensity. Major components are manufactured from aluminum to provide long service life with minimal maintenance. All parts conform to AAR specifications. A complete flashing light assembly can be installed by two workers.

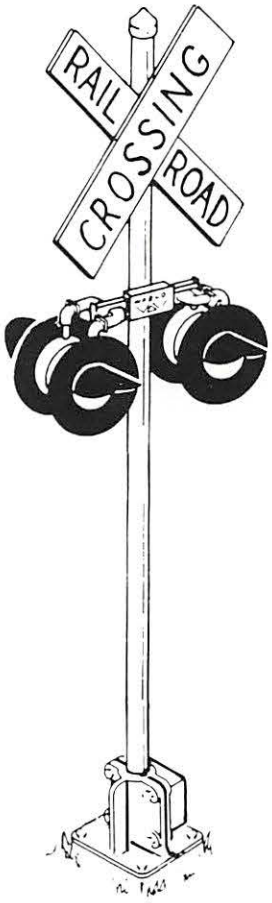

DESCRIPTION

MASTS - US&S highway crossing signal masts are manufactured from schedule 40 and 80 aluminum pipe for easy handling and corrosion resistance. Masts measuring 13'-6" in length and 4" in diameter are used in standard applications, while the 15'-3" mast is necessary whenever additional flashing light assemblies are required for converging highway applications. Follow the ordering instructions on page 2 when selecting masts for converging highway applications.

PINNACLE OR BELL - Either a maintenance-free cast aluminum pinnacle or an aluminum warning bell can be mounted atop the signal mast. The BA-10 crossing warning bell features a steel gong mounted in a cast aluminum housing. The bell operates on 10 Vdc and produces a sound level of 105-113 dbA.

JUNCTION BOX BASE - The aluminum junction box base, used to support the mast, contains 12 AAR terminals for terminating underground cable from the field to the signal assembly, and for making other circuit connections.

FLASHING LIGHT ASSEMBLIES - US&S flashing light assemblies consist of an XA-120 junction box crossarm, HC-100 8-3/8" diameter light units or HC-120A 12" diameter light units, and mounting hardware. They are available in 1-way and 2-way (back-to-back) configurations as shown on page 3.

The XA-120 crossarms are made from aluminum. They permit the azimuth and the range of each light unit to be adjusted independently (refer to page 2 of RSE-10B5).

The aluminum HC-100 and HC-120A light units feature precision lamp adjustment. They incorporate shatter-resistant Lexan® roundels that provide a standard beam pattern of 30° horizontal spread and 15° vertical deflection.

Light assemblies that include light units with beam patterns of 20°/10°, 20°/32° and 70°/0° are also available. Refer to RSE-10B5 for further information on these assemblies, including explanation of roundel beam patterns and some application guidelines.

The HC-120A lights are also available with optional 24" backgrounds, in addition to the standard 20" diameter backgrounds. The larger 24" diameter provides background-to-roundel ratio equivalent to an 8-3/8" diameter light unit. The HC-120A light units are also detailed in RSE 10B5.

SIGNS - All US&S signs conform to AAR specifications and are manufactured from aluminum. Each includes the necessary brackets and hardware for most mountings.

OPTIONAL ITEMS - Optional items such as a pole step, rodent cover and "Stop on Red Signal" sign offer an extra measure of convenience, reliability and safety, respectively. The pole step enables the maintainer to service the light units more easily. The rodent cover is mounted at the bottom of the signal mast to prevent rodents from building nests in the masts and possibly damaging the signal wiring. The "Stop on Red Signal" sign is a requirement of several state highway departments in the U.S., and serves to further direct motorist's attention to the flashing lights.

FEATURES

- Complete adaptability to converging highway applications
- Long-range beam Lexan® roundels.
- Light weight aluminum components.
- Choice of 8-3/8" (HC-100) or 12" (HC-120A) light units.
- Choice of 20" or 24" backgrounds for 12" lights.
- Higher light output with 12" diameter deep dish parabolic reflector.

(®Lexan is a registered trademark of the General Electric Company.)

(®Scotch-Lite is a registered trademark of the 3-M Company.)

PRINTED IN USA

UNION SWITCH & SIGNAL DIVISION
AMERICAN STANDARD INC. / PITTSBURGH, PA 15237

COPYRIGHT 1986, US&S DIVISION OF AMERICAN STANDARD INC.

HOW TO ORDER

US&S flashing light signal assemblies can be ordered in two ways. First, complete basic 1-way or 2-way assemblies can be ordered for standard applications, as shown below. These are specified by a single piece number. If some optional pieces, such as a bell, are also required, they may be ordered separately. Lamps are not included with the basic signal assemblies and also must be ordered separately. Refer to the lamp listing on page 3.

Flashing light signal assemblies can also be ordered in various configurations, using the component ordering chart on page 3. To use this chart, follow the bold arrows to build the basic assembly. Follow the lighter arrows for alternate selections of basic components and options. Optional items are in dashed line boxes. Order by description and part number in bold type (for example, Mast 4", Part No. **M451394-5101**).

FLASHING LIGHT SIGNAL ASSEMBLY

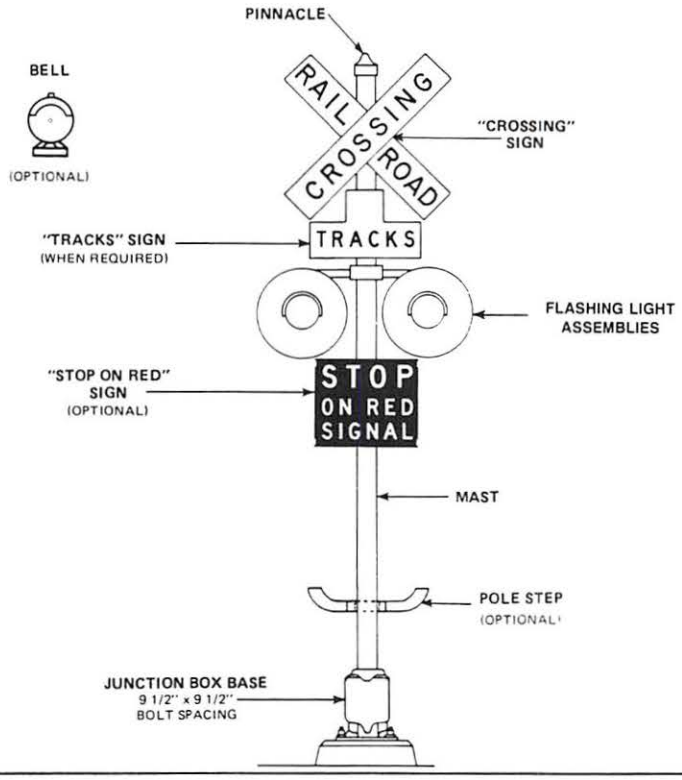

RSE CATALOG CROSS REFERENCES

COMPONENT	CAT.
Masts	10B1
Pinnacle	10B1
Pole Step	10B1
Junction Box Base	10B2
Signs	10B3
Bell	10B4
Flashing light assembly	10B5
Junction Box Crossarm	10B6
Signal light unit	10B7
Lamps	17B1

1-WAY/2-WAY GRADE CROSSING SIGNAL ASSEMBLY FOR STANDARD APPLICATIONS

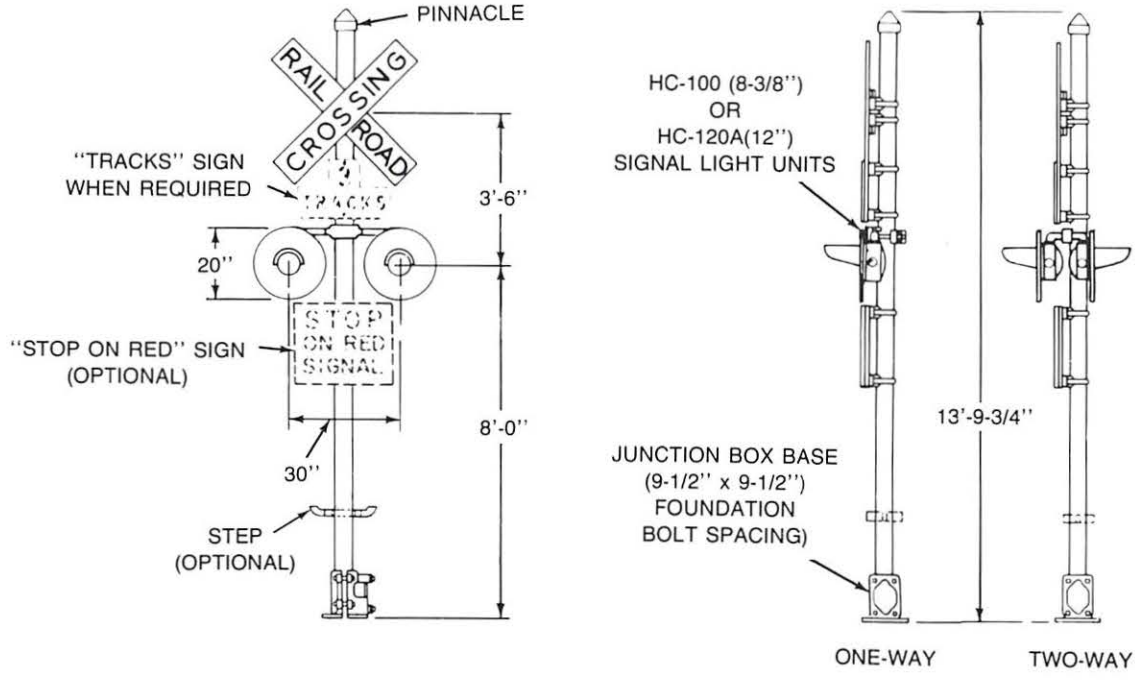

- **4" DIAMETER ALUMINUM MAST**
- **JUNCTION BOX BASE WITH 9-1/2" X 9-1/2" BOLT SPACING**
- **"RAILROAD CROSSING SIGN"**
- **CHOOSE 2-WAY OR 1-WAY SIGNAL LIGHT ASSEMBLY**
- **30° SPREAD / 15° DEFLECTION ROUNDEL**

2-WAY/4-UNIT

(4 HOODS AND BACKGROUNDS, AND JUNCTION BOX CROSSARM FOR BACK-TO-BACK SIGNAL MOUNTING)

WITH HC-100 (8-3/8"): PART NO. **X435122-001**
WITH HC-120A (12"): PART NO. **X451506-0601**

1-WAY/2-UNIT

(2 HOODS AND BACKGROUNDS, AND JUNCTION BOX CROSSARM)

WITH HC-100 (8-3/8"): PART NO. **X435123-001**
WITH HC-120A (12"): PART NO. **X451506-0602**

ALUMINUM MASTS

STANDARD MAST
4" DIAMETER
13'-6" HEIGHT
M451394-5101

FOR CONVERGING HIGHWAY APPLICATIONS ONLY

OR

MAST
4" DIAMETER
15'3" HEIGHT

1ST CROSSARM HOLE AT 0°

2ND CROSSARM HOLE:

-AT 90° CLOCKWISE
M451394-5102

-CUSTOM DRILLED
M451394-5103

(SEE NOTE, RIGHT)

MAST
4" DIAMETER
15'3" HEIGHT
ALL HOLES (BASE AND CROSSARM) MUST BE CUT IN THE FIELD
J023824

RODENT COVER PLATE
(OPTIONAL)
M451195-3601

PINNACLE
FOR 4" MAST
J026104

OR

BELL
(OPTIONAL)
J705172

NOTE: WHEN ORDERING CUSTOM-DRILLED MASTS, SPECIFY:

PART NO. M451394-5103

MAST LENGTH

MAST DIAMETER

ANGLE AND DIRECTION (CLOCKWISE OR COUNTER-CLOCKWISE FROM THE 0° REFERENCE POINT) OF THE SECOND CROSSARM HOLE. REFER TO ILLUSTRATION BELOW.

JUNCTION BOX BASE
9-1/2" x 9-1/2" BOLT SPACING
J705049-0201
(SEE NOTE BELOW)

FOUNDATION BOLTS, NUTS AND WASHERS ARE REQUIRED IF SIGNAL FOUNDATIONS ARE POURED AT THE CROSSING SITE. REFER TO CATALOG RSE-10F1 FOR FOUNDATION BOLTS AND RELATED INFORMATION

POLE STEP
(OPTIONAL)
N199590

FLASHING LIGHTS

2-WAY
30° SPREAD
15° DEFLECTION

HC-100
(8-3/8" DIAMETER)
X451506-0102

HC-120A
(12" DIAMETER)
X451506-0104

OR

1-WAY
30° SPREAD
15° DEFLECTION

HC-100
(8-3/8" DIAMETER)
X451506-0101

HC-120A
(12" DIAMETER)
X451506-0103

LAMPS

S-11
10V, 18W
S.C.B.C. BASE
J071463

OR

S-11
10V, 25W
S.C.B.C. BASE
J071574

OR

G-16 1/2
110V, 25W
S.C.B.C. BASE
J714054

OR

QUARTZ IODINE
10V, 16W
S.C.B.C. BASE
J714283

OR

QUARTZ IODINE
10V, 36W
S.C.B.C. BASE
J714284

SIGNS

"RAILROAD CROSSING"

ENGINEERING GRADE
X392931-001

HIGH INTENSITY
X392931-007

"TRACKS" WHEN REQUIRED

(SPECIFY TRACK NUMBER)

ENGINEERING GRADE
X392929-001

HIGH INTENSITY
X392929-005

"STOP ON RED"
(OPTIONAL)

ENGINEERING GRADE
X392930-001

HIGH INTENSITY
X392930-005

ASSEMBLY COMPLETE

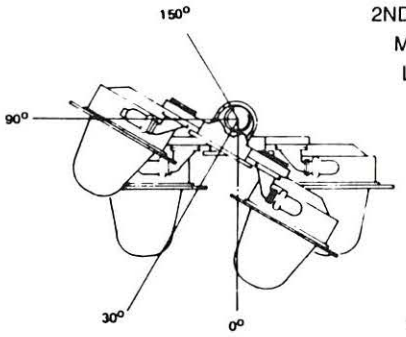

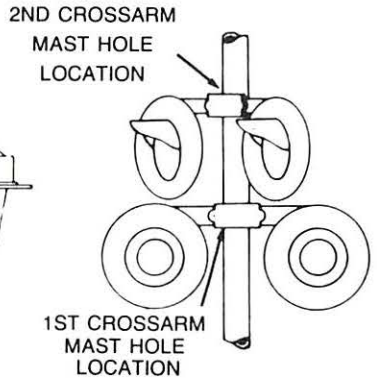

CONVERGING HIGHWAY APPLICATIONS

NOTE: ILLUSTRATION SHOWS CONVERGING LIGHT ASSEMBLY SET AT 30° CLOCKWISE FROM 0° REFERENCE.

NOTES:

2 LAMPS REQUIRED FOR EACH 1-WAY LIGHT ASSEMBLY

4 LAMPS REQUIRED FOR EACH 2-WAY LIGHT ASSEMBLY

S.C.B.C. = SINGLE CONTACT BAYONET CANDELABRA

UNION SWITCH & SIGNAL

FLASHING SIGNAL LIGHT ASSEMBLY WITH MODEL 75 CROSSING GATE

US&S offers a complete grade crossing flashing signal light assembly with Model 75 Crossing Gate. This gate is fully adjustable and provides traffic warning with arm lengths from 17 to 40 feet. Its mechanism utilizes fail-safe design principles and is adaptable to 2 or 3-wire control circuitry. The flashing signal lights of the assembly can be used in 2-way or 1-way traffic approach signaling. These lights employ a high quality optical system that meets the needs of modern, high-speed highways and surpasses AAR performance specifications. Major components of the light assembly are manufactured from aluminum for long service life and minimal maintenance.

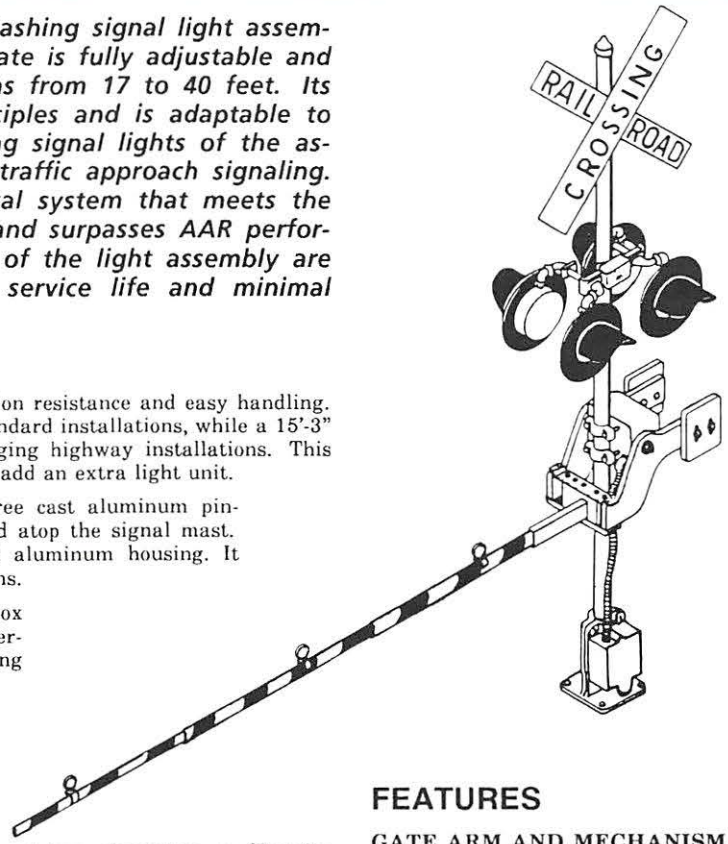

DESCRIPTION

MASTS - The mast is made of aluminum for corrosion resistance and easy handling. A 5" diameter, 13'-6" high mast is available for standard installations, while a 15'-3" high mast (same diameter) is available for converging highway installations. This mast can be drilled at the factory or in the field to add an extra light unit.

PINNACLE OR BELL - Either a maintenance-free cast aluminum pinnacle or an aluminum warning bell can be mounted atop the signal mast. The bell features a steel gong mounted in a cast aluminum housing. It provides extra warning at the crossing for pedestrians.

JUNCTION BOX BASE - An aluminum junction box base, used to support the mast, contains 24 AAR terminals for terminating underground cable and making other circuit connections.

GATE ARMS - Two high-quality, maintenance-free gate arm constructions are available: aluminum or fiberglas. Both come in three adjustable lengths to meet crossing gate applications from 17' to 40'.

Each gate arm has one fixed aluminum section and two aluminum or fiberglas telescoping sections. The gate arms are linked to the support assembly by a shear pin that prevents damage to the mechanism in case the arm is struck. Diagonal striping (red and white) is available in either engineering grade or Scotch-Lite®. Each arm section is also equipped with a weather-proof, bi-directional light, 4" or 7" diameter. The wiring harness and each light unit is plug-connected for easy replacement.

GATE SUPPORT ARMS - Gate support arms are constructed of cast aluminum. The gate arm bracket provides 12" of lateral adjustment in 1" increments to clear overhead obstructions.

GATE MECHANISM - The highly reliable gate mechanism is mounted on a steel chassis and housed in an aluminum enclosure. It consists of a drive motor, gear train, control elements and terminals for control wiring. The motor incorporates thermal overload protection (factory or field wired). A DN-22A vital relay or non-vital relay may be selected for 2-wire control circuit applications. The relay is omitted for 3-wire control circuits. The gate is locked into the clear position by an electromagnetic brake. If power fails, the gate arm drops to the horizontal position.

FLASHING LIGHT ASSEMBLIES - These assemblies feature a choice of an HC-100 Light Unit with 8-3/8" roundel, or HC-120 Light Unit with 12" roundel for installations requiring a larger light indication. Lexan® roundels, with a 30° horizontal spread and a 15° downward deflection, are utilized in the light units. The junction box crossarm of this assembly is made of aluminum and features a movable plate to simplify access to internal AAR wiring terminals. Aluminum fittings on the assembly allow independent horizontal and vertical adjustment.

SIGNS - Signs use high quality Scotch-Lite® backgrounds with a choice of engineering grade or high intensity lettering. All components meet AAR specifications. Mounting brackets and hardware are included.

FEATURES

GATE ARM AND MECHANISM

- Fully adjustable from 17' to 40'; no size stocking needed
- Torque easily measured in any position
- Can be ratcheted to horizontal position for arm replacement
- Clear position adjustable from 70° to 90°
- Drops to horizontal position in case of power failure
- Unique break-away design; arm falls free in case of vehicle impact, without damage
- Built-in overload protection for motor

FLASHING LIGHT ASSEMBLY

- Assemblies for 2-way or 1-way traffic approach; fully adjustable
- Choice of HC-100 or HC-120A light units
- High-impact Lexan® roundels
- Corrosion-proof, AAR-spec. components

(®Lexan is a registered trademark of the General Electric Company.)

(®Scotch-Lite is a registered trademark of the 3-M Company.)

COPYRIGHT 1988, UNION SWITCH & SIGNAL INC.

SPECIFICATIONS - MODEL 75 ALUMINUM CROSSING GATE

GATE MECHANISM ASSEMBLY

Mechanism Weight:	225 lbs.
Power Supply:	12 Vdc
Nominal Current (Raising):	(Refer to Service Manual 6043)
Drive:	Electric motor. High torque. Low speed.
Gear Train:	115:1 reduction. Pre-lubricated. Factory-sealed.
Main Shaft Bearing:	Pre-lubricated. Factory-sealed.
Circuit Controller:	Contact type. Cam-operated. Clear position adjustable from 70° to 90°.
Circuit Controller Contacts:	Factory-adjusted 1/16" opening (min.) Wipe 1/64" (min.)
Mounting Mast:	Existing 4" or 5" pipe masts. New pre-drilled mast furnished.

GATE ARM ASSEMBLY

Arm Length:	Adjustable, in 1' increments measured from center line of mast: 17' to 27' 28' to 33' 34' to 40'
Arm Weight:	30 lbs. (tot.) for 17' to 27' arm 40 lbs. (tot.) for 28' to 33' arm 50 lbs. (tot.) for 34' to 40' arm
Counterweight Weight:	222 lbs. for 17' to 27' arm 323 lbs. for 28' to 33' arm 496 lbs. for 34' to 40' arm
Arm Support Weight:	30 lbs.
Arm Ascent Time:	Choice of maximum clearing times: 10, 15 or 20 sec. at min. battery volt. (Refer also to Service Manual 6043.)
Arm Descent Time:	Variable by adjusting snubbing resistor: 8 to 15 sec.
Arm Warning Stripes:	16" wide, alternating reflective red and reflective white
Arm Warning Lamps:	3 weatherproof units. (Refer to Service Manual SM-6043 for recommended wire sizes and batteries.

HOW TO ORDER

The complete flashing signal light assembly with Model 75 Crossing Gate is ordered using the simplified flow chart on page 3. To use this chart, start from the upper left and follow the bold arrows to build the basic assembly. Follow the lighter arrows for alternate selections of basic components. Optional items are listed in dashed-line boxes. Order by description and part number in bold type (for example, Pinnacle for 5" mast, Part No. **J026111.**) Make sure to read any special notes below items on the chart. Contact US&S Sales for special assemblies not covered in this catalog. For additional ordering information on the components used in these assemblies, refer to the RSE Catalog tabulation below:

RSE CATALOG CROSS REFERENCE

COMPONENT	CATALOG
Masts and Pinnacle	10B1
Junction Box Bases	10B2
Signs	10B3
Bell	10B4
Signal Units with Junction Box Crossarms	10B5
Junction Box Crosssarms	10B6
Signal Light Units	10B7
Gate Mechansim	10B8
Gate Arms	10B9
Gate Arm Adapter Brackets	10B10
Illuminated Sign Assembly	10B11

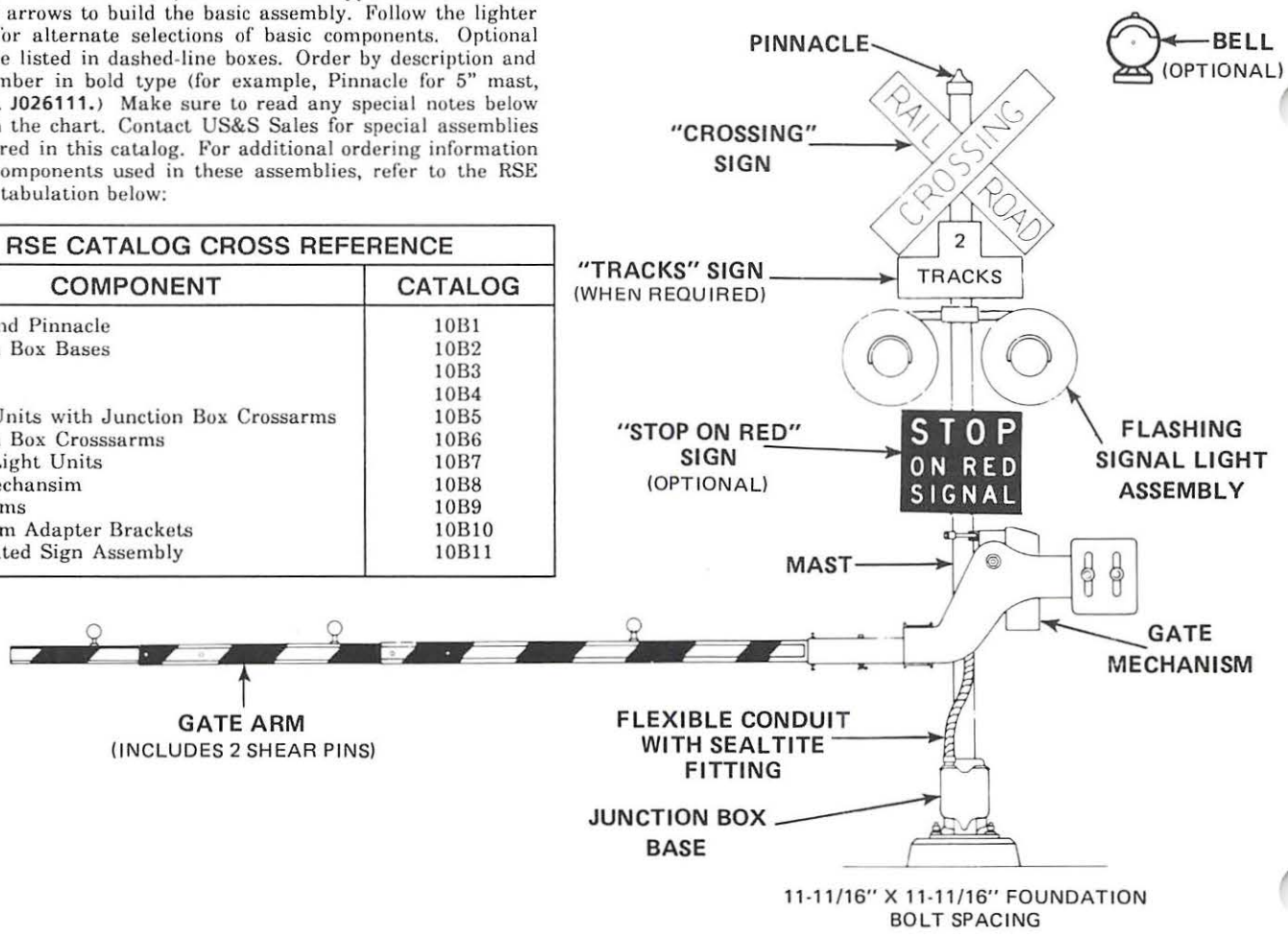

ALUMINUM MASTS

STANDARD MAST
5" DIAMETER
13'6" HEIGHT
M451394-3902

OR

FOR CONVERGING HIGHWAY APPLICATIONS ONLY

1. DETERMINE REQUIRED ANGLE FROM DIAGRAM BELOW.
2. SPECIFY ANGLE ON ORDER.
3. ORDER EXTRA LIGHT UNITS FROM "FLASHING LIGHTS".

MAST
5" DIAMETER
15'3" HEIGHT
1ST HOLE @ 0°
2ND HOLE FIELD DRILLED
M451394-4001
@ 30° ANGLE
M451394-4002
@ 90° ANGLE
M451394-4003
@ 150° ANGLE
M451394-4004

RODENT COVER PLATE
(OPTIONAL, BUT RECOMMENDED)
M451195-3602

JUNCTION BOX BASE
11-11/16" BOLT SPACING
J705049-0801

AND

PINNACLE
FOR 5" MAST
J026111

OR

BELL
(OPTIONAL)
N451542-0101

NOTE: FOUNDATION BOLTS, NUTS, WASHERS REQUIRED IF SIGNAL FOUNDATIONS POURED AT CROSSING SITE. REFER TO RSE-10F1.

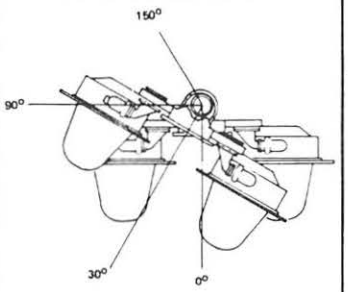

NOTE: EXAMPLE OF CONVERGING SIGNAL ASSEMBLY SET AT 30°.

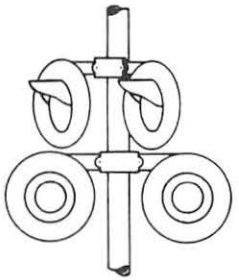

GATE ARMS

ALUMINUM

ARMS/ LIGHTS	REFLECTIVE STRIPING ENG. GRADE	HI-INTENSITY
ARMS: 17' - 27' LIGHTS:		
4"	N451070-0201	N451070-0211
7"	N451484-5703	N451484-5704
ARMS: 28' - 33' LIGHTS:		
4"	N451070-0207	N451070-0213
7"	N451484-5501	N451484-5716
ARMS: 34' - 40' LIGHTS:		
4"	N451484-3601	N451484-3604
7"	N451484-5727	N451484-5728

OR

FIBERGLAS

ARMS/ LIGHTS	REFLECTIVE STRIPING ENG. GRADE	HI-INTENSITY
ARMS: 17' - 27' LIGHTS:		
4"	N451484-5707	N451484-5708
7"	N451484-5709	N451484-5710
ARMS: 28' - 33' LIGHTS:		
4"	N451484-5719	N451484-5720
7"	N451484-5721	N451484-5722
ARMS: 34' - 40' LIGHTS:		
4"	N451484-5731	N451484-5732
7"	N451484-5733	N451484-5734

LAMPS FOR ARM LIGHTS
10V-18W, SCBC
J071463

MODEL 75 GATE MECHANISM

WITH DN-22A RELAY
(2-WIRE CKT.)
FOR:
17' - 27' ARMS
X451483-0601
28' - 33' ARMS
X451483-0603
34' - 40' ARMS
X451483-0605

OR

WITHOUT RELAY
(3-WIRE CKT.)
FOR:
17' - 27' ARMS
X451483-0602
28' - 33' ARMS
X451483-0604
34' - 40' ARMS
X451483-0606

NOTE: REFER TO RSE-10B8 FOR GATE MECHANISMS EQUIPPED WITH NON-VITAL RELAY, AND FOR DETAILS OF PIVOT CLAMP ASSEMBLY BELOW.

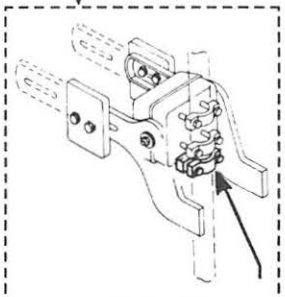

PIVOT CLAMP ASSEMBLY
(OPTIONAL, BUT RECOMMENDED)
X451483-0638

FLEXIBLE CONDUIT WITH SEALTITE FITTING
X451483-0639

LAMPS

10V-18W
S.C.B.C BASE
J071463

OR

10V-25W
S.C.B.C BASE
J071574

OR

110V-25W
S.C.B.C BASE
J714054

OR

QUARTZ IODIDE
10V-16W
J714283

OR

QUARTZ IODIDE
10V-36W
J714284

NOTES: 2 LAMPS REQ'D. FOR EACH 1-WAY LIGHT ASSEMBLY.

4 LAMPS REQ'D FOR EACH 2-WAY LIGHT ASSEMBLY.

FLASHING LIGHTS

2-WAY, 30°/15° DEFL.

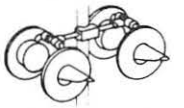

HC-100 (8-3/8" DIA.)
X451506-0307
HC-120A (12" DIA.)
X451506-0308

OR

1-WAY, 30°/15° DEFL.

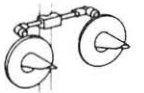

HC-100 (8-3/8" DIA.)
X451506-0301
HC-120A (12" DIA.)
X451506-0303

SIGNS

"RAILROAD CROSSING"
ENG. GRADE
X392931-002
HI-INTENSITY
X392931-008

"TRACKS"
(SPECIFY QTY.)
ENG. GRADE
X392929-002
HI-INTENSITY
X392929-006

"STOP ON RED" W/STAND-OFF
(OPTIONAL)
ENG. GRADE
X438077
HI-INTENSITY
X438077-001

ASSEMBLY COMPLETE

UNION SWITCH & SIGNAL

BA-10 DC GRADE CROSSING BELL

The BA-10 Grade Crossing Bell provided added warning for pedestrians at grade crossings. It can be directly mounted on the mast without adapter hardware.

DESCRIPTION

The BA-10 Grade Crossing Bell consists of a 12 inch steel gong mounted on a round cast aluminum housing. The housing is equipped with a rain hood and hinged aluminum cover which can be secured with a padlock. Mounting on a 4" or 5" mast is accomplished with a set screw. Unlike previous versions, the latest BA-10 can be mounted on the 4" mast without need of an adapter collar.

The operating mechanism inside the housing consists of a rotary solenoid, actuator, clapper, adjustable contacts arc suppressor (capacitor and diode) and cyclic rate reducing capacitor. A 10 volt dc ($\pm$25%) source is required for operating power. When the bell is operated at 10 volts, the current draw is 0.3 amperes.

FEATURES

- Provides clear audible warning at grade crossing
- Rugged aluminum housing with rain hood
- Fits 4" or 5" masts without need of adapter
- Simple installation
- Reliable operating mechanism

HOW TO ORDER

Order the BA-10 Grade Crossing Bell from the tabulation below. Note that the 4" mast adapter for the older version of the BA-10 (N451542-0102) is only included to replace existing units. It is not required for the latest version of the BA-10.

PART NO.	DESCRIPTION
J705173	BA-10 Crossing bell for 5" mast
J705172	BA-10 Crossing bell for 4" mast
J793026	4" mast adapter for old style BA-10
J050578	Set screw, 3/8 - 16 x 1-1/2" for above adapter only.

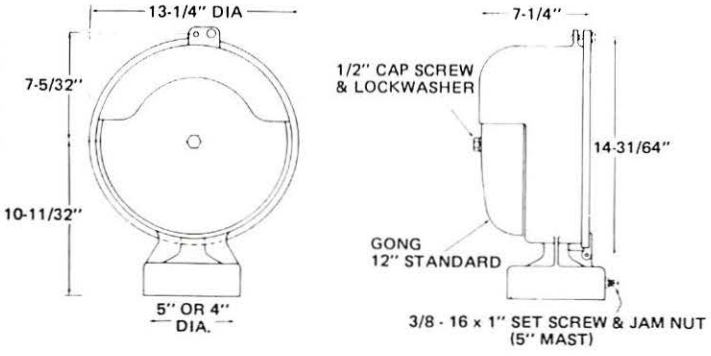

PRINTED IN USA

UNION SWITCH & SIGNAL DIVISION
AMERICAN STANDARD INC. / PITTSBURGH, PA 15237

COPYRIGHT 1986, US&S DIVISION OF AMERICAN STANDARD INC.

RSE-10B4
REV. 10/86

GATE MECHANISM AND COMPONENTS MODEL 75

This catalog section provides ordering information for the major subassemblies of the Model 75 Gate Mechansim. For a complete listing of replacement parts and additional information on the Model 75, request US&S Service Manual 6043.

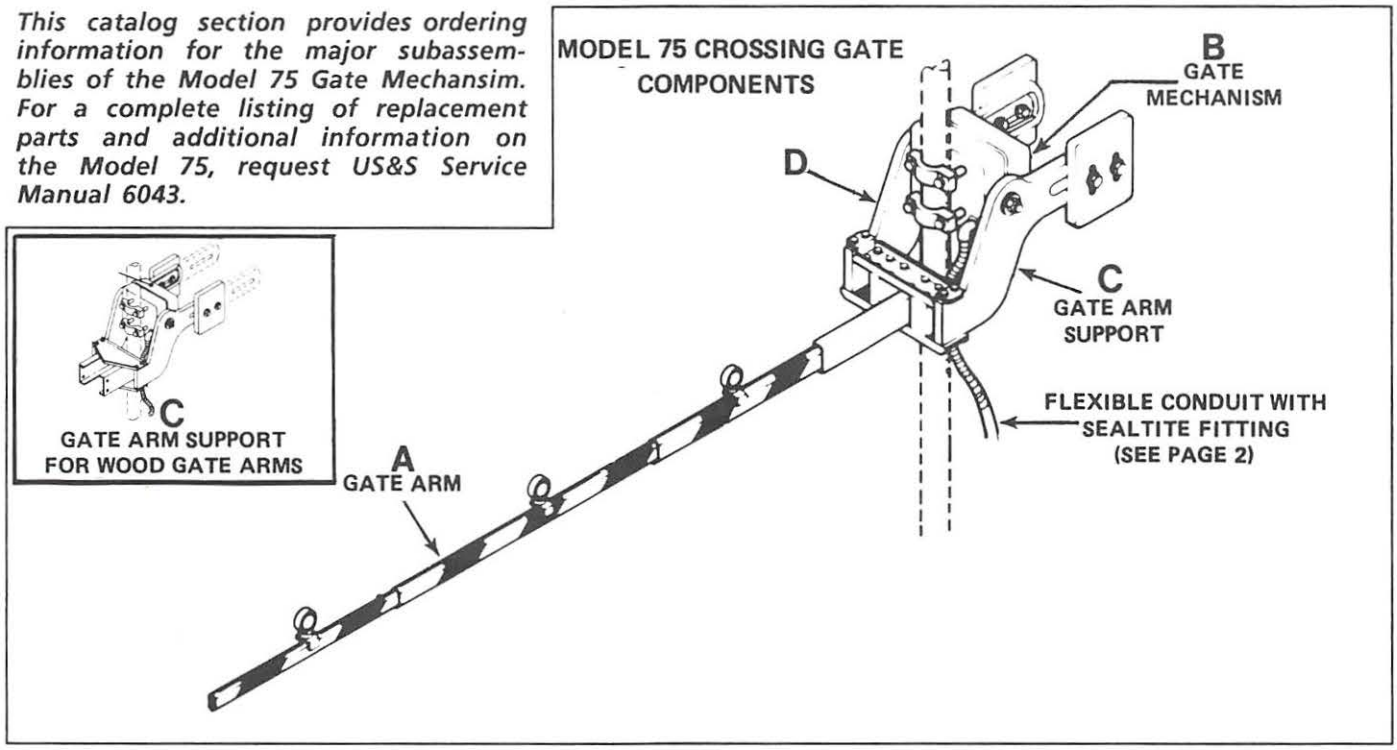

A - ALUMINUM GATE ARMS (Includes two shear pins)

PART NO.	ARM LENGTHS	REFLECTIVE STRIPING	LIGHTS DIA.
N451070-0201	17' to 27'	Engineering Grade	4"
N451484-5703	17' to 27'	Engineering Grade	7"
N451070-0211	17' to 27'	Hi-Intensity	4"
N451484-5704	17' to 27'	Hi-Intensity	7"
N451070-0207	28' to 33'	Engineering Grade	4"
N451484-5501	28' to 33'	Engineering Grade	7"
N451070-0213	28' to 33'	Hi-Intensity	4"
N451484-5716	28' to 33'	Hi-Intensity	7"
N451484-3601	34' to 40'	Engineering Grade	4"
N451484-5727	34' to 40'	Engineering Grade	7"
N451484-3604	34' to 40'	Hi-Intensity	4"
N451484-5728	34' to 40'	Hi-Intensity	7"

A - FIBERGLAS GATE ARMS (Includes two shear pins)

PART NO.	ARM LENGTHS	REFLECTIVE STRIPING	LIGHTS DIA.
N451484-5707	17' to 27'	Engineering Grade	4"
N451484-5709	17' to 27'	Engineering Grade	7"
N451484-5708	17' to 27'	Hi-Intensity	4"
N451484-5710	17' to 27'	Hi-Intensity	7"
N451484-5719	28' to 33'	Engineering Grade	4"
N451484-5721	28' to 33'	Engineering Grade	7"
N451484-5720	28' to 33'	Hi-Intensity	4"
N451484-5722	28' to 33'	Hi-Intensity	7"
N451484-5731	34' to 40'	Engineering Grade	4"
N451484-5733	34' to 40'	Engineering Grade	7"
N451484-5732	34' to 40'	Hi-Intensity	4"
N451484-5734	34' to 40'	Hi-Intensity	7"

B - GATE MECHANISM

Notes: In addition to mechanism, part number includes mast clamps, bolts, washers and 1-1/2" standard connector for flexible conduit.

All mechanisms equipped with built-in thermal overload protection for motor. However, only part no. N451483-0107 has thermal protection circuit factory-wired to the motor control circuit. Other mechanisms include kit to wire thermal circuit in the field.

Part numbers N451483-2101 and -2102 incorporate non-vital gate control relay (GCR) for 2-wire control circuits. Relay is 12 Vdc, 4PDT type.

PART NO.	DESCRIPTION
N451483-0101	Mechanism with DN-22A vital GCR for 2-wire control. Thermal protection not factory-wired.
N451483-0102	Mechanism with no GCR, for 3-wire control. Thermal protection not factory-wired.
N451483-0107	Mechanism with DN-22A vital GCR for 2-wire control. Thermal protection factory-wired.
N451483-2101	Mechanism with non-vital GCR for 2-wire control. Thermal protection not factory-wired.
N451483-2102	Same as N451483-2201. Also includes special heater (contact US&S Sales for details).

COPYRIGHT 1988, UNION SWITCH & SIGNAL INC.

C - GATE SUPPORT
(Includes lateral adjustment bracket)

PART NO.	ARM LENGTHS	COUNTERWEIGHT
X451484-2701	17' to 27'	222 lbs.
X451484-2702	28' to 33'	323 lbs.
X451484-2708	34' to 40'	496 lbs.

C - SUPPORT FOR WOOD GATE ARMS

PART NO.	ARM LENGTHS	COUNTER-WEIGHT	W/ARM EXTENSION
X451484-2703	14' to 18'	183 lbs.	No
X451484-2704	19' to 24'	280 lbs.	No
X451484-2705	25' to 30'	496 lbs.	No
X451484-2706	31' to 38'	496 lbs.	Yes
X451484-2709	39' to 44'	496 lbs.	Yes

D - GATE MECHANISM WITH GATE ARM SUPPORT AND COUNTERWEIGHTS
(Includes mast clamps, bolts, washers and 1-1/2" standard connector for flexible conduit)

Note: The assemblies below with 2-wire controlled gate mechanisms only incorporate the US&S DN-22A vital relay (GCR), not the non-vital relay. To obtain an assembly with the non-vital relay, order the individual components from sections B (front of sheet) and C of this catalog, or contact US&S Sales.

PART NO.	ARM LENGTHS	GCR RELAY	CONTROL CIRCUIT
X451483-0601	17' to 27'	With	2-Wire
X451483-0602	17' to 27'	Without	3-Wire
X451483-0603	28' to 33'	With	2-Wire
X451483-0604	28' to 33'	Without	3-Wire
X451483-0605	34' to 40'	With	2-Wire
X451483-0606	34' to 40'	Without	3-Wire

OPTIONAL HARDWARE FOR ALUMINUM, FIBERGLAS AND WOOD ARMS

PIVOT CLAMP ASSEMBLY
(Allows gate arm in horizontal position to be swung from highway during maintenance.)

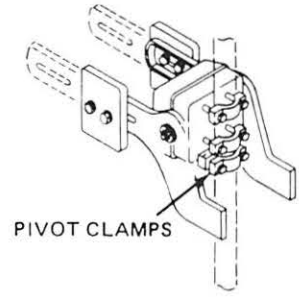

PART NO.	DESCRIPTION	QTY REQ'D
X451483-0638	Complete Assembly, includes two each of clamps, bolts, nuts and washers.	1*
M192519-003	Pivot Clamp (separate)	2
J046572	Bolt (separate)	2
J480210-0157	Nut (separate)	2
J475138-0119	Washer (separate)	2

* Required to equip one complete gate assembly.

FLEXIBLE CONDUIT WITH SEALTITE FITTING
(Conduit Assembly)

PART NO.	DESCRIPTION
X451483-0639	Flexible Conduit with Sealtite Fitting 1-1/2" x 34" long

DATA ACQUISTION AND CONTROL SYSTEMS

DATA TRANSMISSION SYSTEMS (RELAY-CODE COMPATIBLE)

FCE-500 Field Code Emulator RSE-11B1

MULTI-PURPOSE CONTROLLER AND DATA TRANSMISSION SYSTEM

GENISYS Non-Vital Logic Emulator RSE-11C1

EVENT RECORDER

EVENTTRAK Digital Event Recording System RSE-11D1

INTERLOCKING CONTROL SYSTEMS

MICROLOK Vital Interlocking Control System RSE-11E1

HC-10 ILLUMINATED SIGN ASSEMBLY

The HC-10 Illuminated Sign Assembly helps maximize safety at highway crossings. It warns motorists on a street parallel to the railroad track that a train is approaching the intersection ahead. This signal utilizes US&S's high quality HC-120A highway crossing signal housing and large, easily read letters on an opaque background. A variety of signs are available for different crossing requirements.

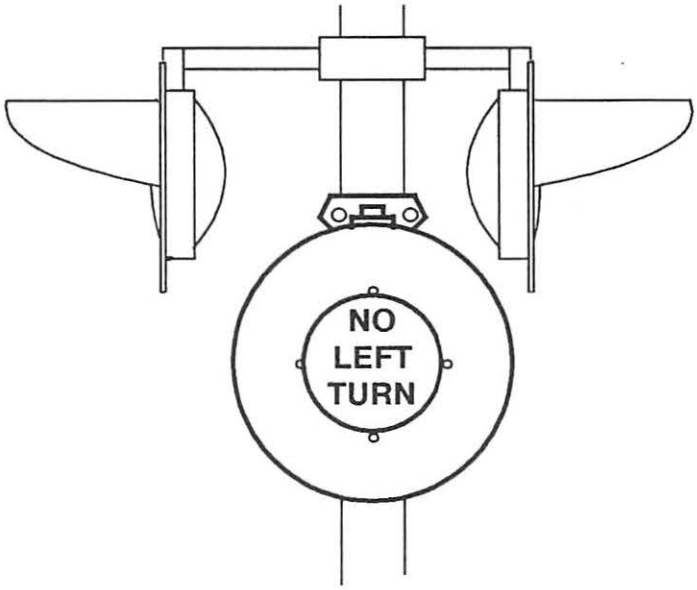

DESCRIPTION

The complete HC-10 Illuminated Sign Assembly consists of a signal unit supported by a fully adjustable, mast-mount bracket. Assemblies are available for mounting on a 4 inch or 5 inch steel or aluminum mast. Signs include "NO LEFT TURN", "NO RIGHT TURN", "STOP", left-pointing arrow, "E", and "O". The latter two signs are available to meet special state laws governing highway crossing warning devices.

The HC-10 incorporates the same housing as the HC-120A flashing signal light unit. This housing employs aluminum components and stainless steel fastener hardware for corrosion resistance. It is hinged between the rear lamp section and the front lens section to permit routine maintenance access. Offset lugs on both halves of the housing permit installation of a bolt or padlock. The housing is equipped with a hood as a standard item.

A 12 inch, deep dish metal parabolic reflector inside the housing provides precise magnification of the light source. Reflected light passes through a set of clear and translucent polycarbonate lenses (non-refracting) at the front of the unit. Included is the selected sign lens, which consists of a black opaque background and transparent lettering.

The HC-10 accepts 10Vdc-18W, 10Vdc-25W and 110Vac-25W lamps with bayonet base. These are fitted in a single-contact, brass-plated socket at the bottom center of the reflector.

FEATURES

- Helps improve safety at highway crossings
- Variety of signs available
- Sign conspicuous at a distance or in daylight
- Hinged, lockable housing permit easy access
- High-impact front lenses
- Mounts on 4 or 5 inch steel or aluminum mast
- Fully adjustable mounting bracket.

HOW TO ORDER

To order the complete HC-10 Illuminated Sign Assembly with adjustable mounting bracket, first select the desired sign unit (i.e. "NO LEFT TURN"). Then select the mounting bracket for the required mast diameter (4 or 5 inch). Note that the individual sign units are equipped with a hood, but not a background. The background is included with the bracket part number.

Contact US&S Sales for special HC-10 signs not covered in this catalog, and for mast and junction box base ordering. HC-10 replacement parts are listed on pages 2 and 3. Refer to RSE-17B1 for lamp ordering.

PART NO.	DESCRIPTION
N451641-0101	HC-10 Illuminated Sign unit only, "NO LEFT TURN"
N451641-0102	Same as above, "NO RIGHT TURN"
N451641-0103	Same as above, "E"
N451641-0104	Same as above, left arrow
N451641-0105	Same as above, "STOP"
N451641-0106	Same as above, "O"
X451641-0201	HC-10 adjustable mounting bracket (and sign unit background) for 4" mast.
X451641-0202	Same as above, for 5" mast.

COPYRIGHT 1988, UNION SWITCH & SIGNAL INC.

REPLACEMENT PARTS

COMPLETE HC-10 ASSEMBLY X451641-0201 AND -0202

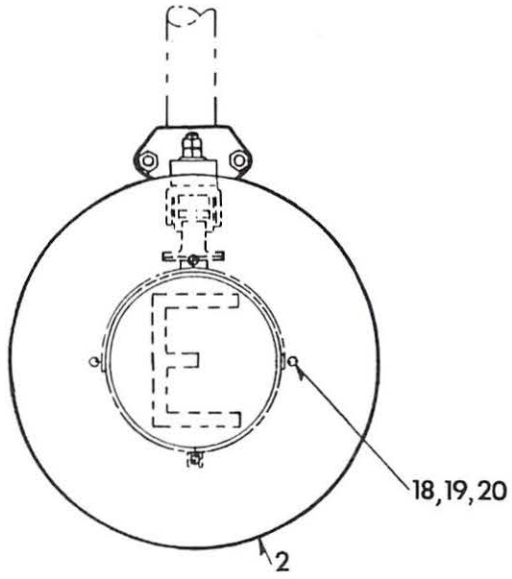

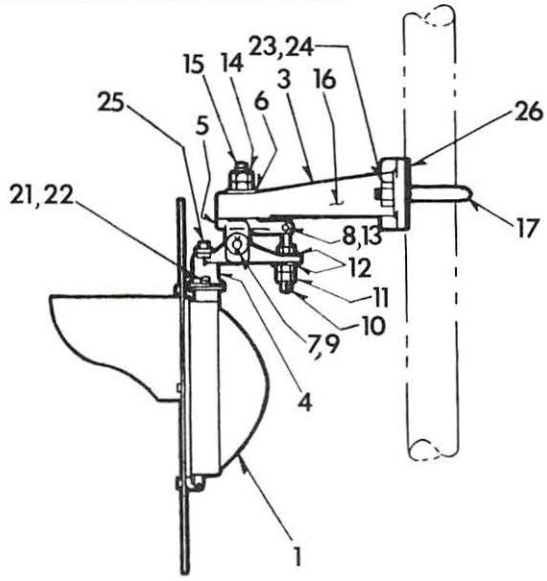

REF.	PART NO.	DESCRIPTION
1	N451641-0101	Sign Unit, "NO LEFT TURN" (Note 1)
	N451641-0102	Sign Unit, "NO RIGHT TURN" (1)
	N451641-0103	Sign Unit, "E" (Note 1)
	N451641-0104	Sign Unit, Left Arrow (Note 1)
	N451641-0105	Sign Unit, "STOP" (Note 1)
	N451641-0106	Sign Unit, "O" (Note 1)
2	M451498-2403	Background
3	N451354-1003	Bracket, Supporting
4	M255236-001	Support, Lamp Unit (Note 2)
5	M148525-001	Bracket, Adjusting (Note 2)
6	M080821-001	Washer (Note 2)
7	J048695	Cotter Pin, 3/16 x 1-1/2 SST. (2)
8	M024289-001	Pin (Note 2)
9	M016458-001	Pin (Note 2)
10	M125826	Eye Bolt (Note 2)

Notes (1) Not included under top part number; ordered separately.
(2) Included under Ref. 3 part number.

REF.	PART NO.	DESCRIPTION
11	J480210-0106	Nut, 5/8-11 Hex, Heavy (Note 2)
12	J475132-0118	Washer, 5/8" Steel Plate (Note 2)
13	J048691	Cotter Pin, 1/8 x 3/4 SST. (Note 2)
14	J480210-0159	Nut, 1-8 Hex Steel, Jam (Note 2)
15	J466074-0136	Screw, 1-8 x 4-1/2 Sq. Hd. (2)
16	M148494-003	Arm, Supporting (Note 2)
17	M136690	U-Bolt, For 5" Pipe
	M054865	U-Bolt, For 4" Pipe
18	J507296-0108	Screw, 10-32 x 1/2 Pan Head, SST.
19	J475120-0110	Washer, #10, Steel Plate
20	J475121-0109	Washer, #10, Lock, SST.
21	J466076-0124	Screw, 1/2 - 13 x 1-1/2, Hex
22	J475138-0115	Washer, 1/2 Steel Spring
23	J480210-0107	Nut, 3/4-10, Hex
24	J047627	Washer, Lock
25	J323097	Connector, 3/4 Flexible Conduit
26	M451195-4201	Shim (Note 3)

Notes (3) Only required for steel mast

HC-10 SIGN UNIT ASSEMBLY N451641-010X (See Figure on Page 3)

REF.	PART NO.	DESCRIPTION
1	N451498-1703	Case
2	M451498-1702	Case, Machined (Note 1)
3	J792563	Insert, Threaded (Note 1)
4	J487317	Pin-Roll, 1/4 x 1-1/4 (Note 1)
5	J079416	Ventilator, Brass (Note 1)
6	M451498-1802	Cover, Machined
7	A750068	Rubber Spacing Shim, 5/32 x 3/4
8	J470070	Gasket, 3/16 x 3/8 x 45
9	J470069	Gasket, 1/16 x 1/4 x 45
10	J487315	Pin-Roll, 1/4 x 1-3/4
11	(See Tab. p. 3)	Screw, 5/16-18 x 1, Hex Head
12	(See Tab. p. 3)	Retainer Bolt, Push 5/16"
13	(See Tab. p. 3)	Pin, Grooved 3/32 x 1/2
14	J792569	Gasket, Side Window
15	M451498-2201	Retainer, Side Window
16	M451642-0302	Cover, Side Window
17	(See Tab. p. 3)	Insert, Threaded
18	M451642-0102	Adapter
19	M451642-0301	Gasket
20	J532137-0201	Reflector, 12"

Notes (1) Included under Ref. 1 part number.

REF.	PART NO.	DESCRIPTION
21	M451642-0303	Clip, Reflector Retaining
22	M438849	Gasket, Reflector Retaining
23	M451642-0304	Plate, Strain Relief
24	J751173	Grommet, Rubber
25	J703449	Pin-Roll, 1/4 x 7/8 Stainless Steel
26	J725908	Socket-Lamp, Single Contact
27	M451642-0201	Holder, Lamp Socket
28	J525339	Screw, 1/4-20 x 3/4 Fl. Head.
29	J500113	Screw, 6-32 x 1/8 Socket Head
30	A045525-0007	Wire, #16 PVC, Black
31	A045525-0005	Wire, #16 PVC, White
32	J730044	Terminal
33	J507296-0108	Screw, 10-32 x 1/2 Pan Head, SST.
34	J475120-0110	Washer, #10, SST, Plate
35	J475121-0109	Washer, #10 Lock, SST.
36	J041606	Sealant, Lock-Tite
37	M437931	Clip
38	M451642-0601	Shield, Clear
39	J776714	Shield, 12"
40	(See Tab. p. 3)	Sign
41	M451498-2501	Hood
42	J507296-0106	Screw, 10-32 x 3/8 Pan Head, SST.

HC-10 SIGN UNIT ASSEMBLY N451641-010X

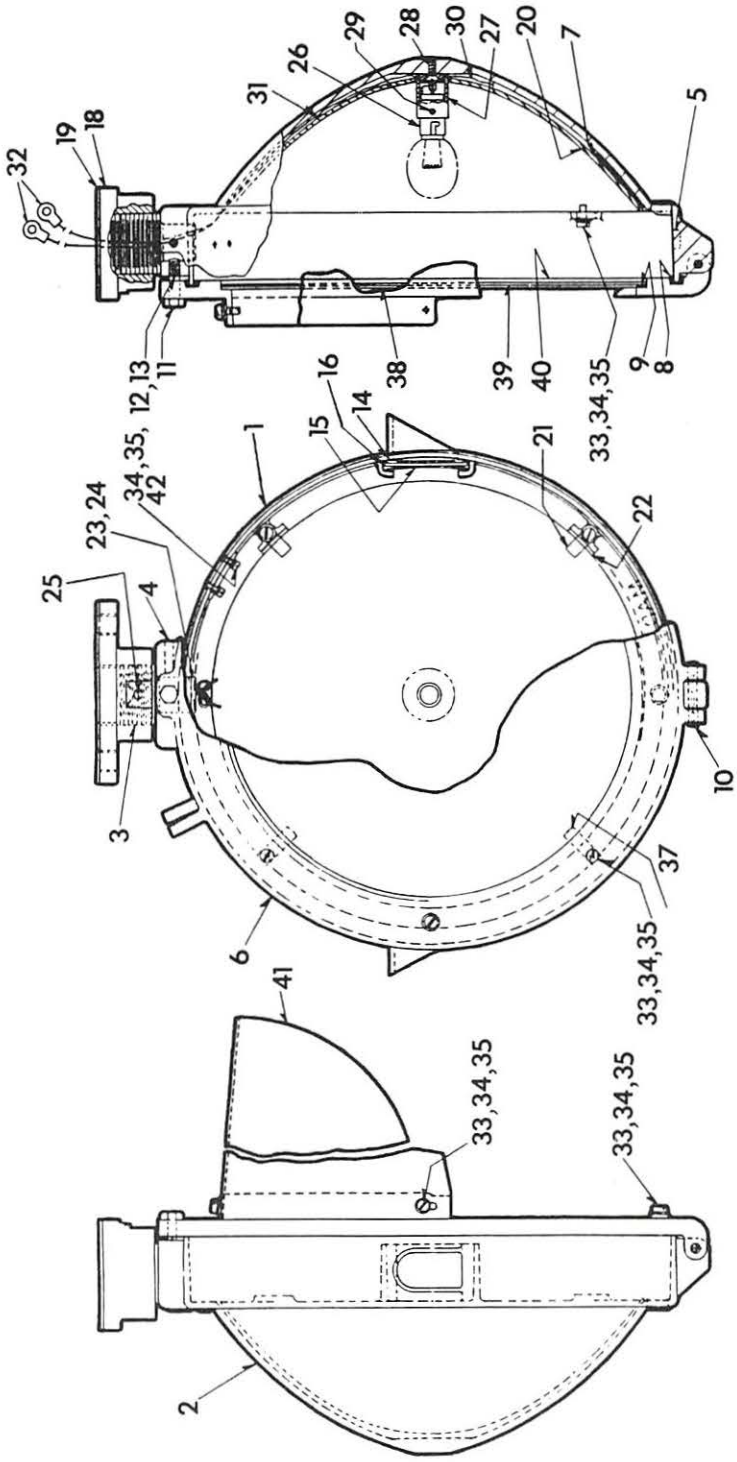

Tabulation continued from bottom of page 2.

REF.	SIGN UNIT PART NO.					
	N451641-0101	N451641-0102	N451641-0103	N451641-0104	N451641-0105	N451641-0106
11	J500098-0116	M436362-001	M436362-001	M436362-001	M436362-001	M436362-001
12	J560873	--	-	--	--	-
13	--	J703394	J703394	J703394	J703394	J703394
17	J792563	J792563	J792563	J792563	--	J792563
40	M451642-0401 ("NO LEFT TURN")	M451642-0402 ("NO RIGHT TURN")	M451642-0501 ("E")	M451642-0501 (Arrow)	M451642-0801 ("STOP")	M451642-0901 ("O")

DDL-601A-B/X DIGITAL DATA LINK SYSTEMS

The DDL-601A-BIX Digital Data Link is a microprocessor-based code system designed to deliver controls and indications between a Central Traffic Control office and remote wayside locations. It is usually applied as a complete system, consisting of an office code unit and between 1 and 127 Field Code Units similtaneously managed by the office.

DDL-601A OFFICE CODE UNIT

DESCRIPTION

DDL-601A Office Code Unit

The DDL-601A Office is designed to be compatible with most types of CTC office controllers. It consists of a rack-mounted case with roll-out drawer for access to internal controls and components. Internally mounted manual switches are provided to set timing functions, the system bit rate, communciations mode options and miscellaneous hardware programming options. Industry standard "D" connectors on the back of the unit allow convenient interfacing with the office controller and modem. Front panel LEDs permit monitoring of various system functions. Units are available for ac or dc power operation.

Supervisory information is exchanged with the office controller via serial interface. This interface allows asychronous communication of all data and control bits over two or four 20 mA current loops (per application) requiring only 4 or 6 wires. Remote communications with field code units can be accomplished via EIA-standard modems (RS-232C) or the US&S DCS-600 modem (5 volt TTL).

The DDL-601A Office can perform (a) similtaneous communications with all field code units in the system or (b) communicate data with selected field code units, including specific controls/indications within a given unit. All field units are periodically polled to verify system integrity and check for changes in wayside indications. Bit rates for the office/CTC controller and office/ field links are set manually in the office code unit. The office also generates required modem control outputs and monitors for modem-generated signals so that data can be transmitted and received at the proper time. Timing adjustments in the office code unit make certain no operation is executed out of sequence or before associated circuits have time to reset. NMOS processor chip technology is used in the office code unit to maximize speed, volume and flexibility of all communication links. BCH data security is utilized to insure a high degree of information accuracy.

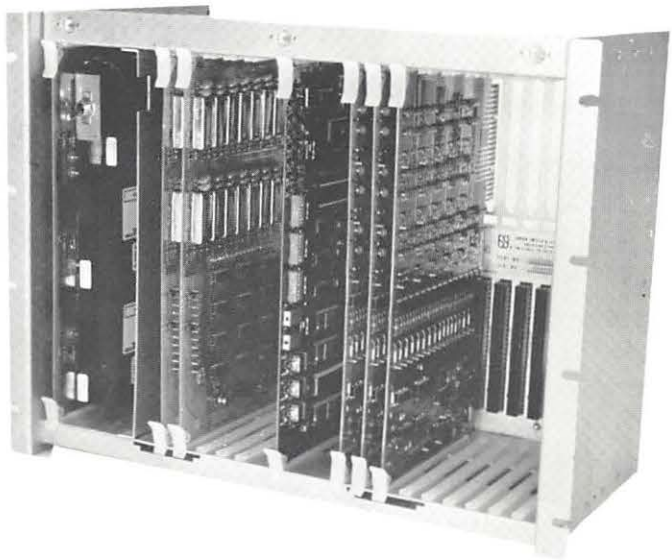

TYPICAL DDL-601A , DDL-601B OR DDL-601BX FIELD CODE UNIT

DDL-601A, DDL-601B and DDL-601BX Field Code Units

The DDL-601A, DDL-601B and DDL-601BX Field Code Units deliver office-initated controls to wayside control circuits, and scan wayside indication contacts, using direct hardwire interfaces. All versions consist of a rack-mounted PCB cardfile with slots for a power supply converter PCB, controller PCB and various combinations of relay-output and optical input PCB's. A wide variety of output and input PCB's are available to suit special wayside circuit applications. These are described in the parts tabulation on pages 3 and 4. Wiring to wayside control and indication circuits is accomplished with PCB edge connectors that attach directly to the relay and optical boards through slots in the rear of the cardfile. Like the DDL-601A Office, these field code units can be interfaced to an EIA standard or US&S DSC-600 modems. The field code units also incorporate controls for configuring modem communications. NMOS processor chips and BCH data security are also utilized in the field unit logic circuits. A variety of ac and dc power-input options are available, and board-mounted LED's permit routine monitoring.

A significant feature of these field code units is elimination of the need for indication input start circuits. The system samples all inputs on a periodic basis and compares with memory. If a change is detected, an internal start is automatically generated. This permits highly efficient use of available indication contacts.

The DDL-601A, DDL-601B and DDL-601BX Field Code units differ in the selection of wayside input and output options. These are described in the parts tabulation on pages 3 and 4.

PRINTED IN USA

UNION SWITCH & SIGNAL DIVISION
AMERICAN STANDARD INC. / PITTSBURGH, PA 15237

COPYRIGHT 1986, US&S DIVISION OF AMERICAN STANDARD INC.

RSE-11A1
REV. 11/86

FEATURES

DDL-601A Office

- Can manage large system of field code units (up to 127).
- Compact, modular design requires minimal rack space, provides easy programming and maintenance access.
- AC or DC power input options.
- EIA RS-232C or US&S 5V TTL modem options.
- Front panel LED's permit regular system monitoring, help localize faults.
- Wide selection of office/controller and office/field bit rates.
- CTC controller serial interface minimizes wiring.
- Compatible with most all CTC controllers.

DDL-601A, DDL-601B and DDL-601BX Fields

- Plug-In PCB's expedite field maintenance, provide flexibility in designing control and indication configurations.
- Wide range of input and output PCB's available.
- No start circuits required; system scans indications periodically, recognizes changes.
- Interfaces directly with wayside relays; no external conversion/protection of logic/relay level signals required.
- AC or DC power input options.
- EIA RS-232C or US&S 5V TTL modem options.
- Board-mounted LED's permit regular system monitoring, help localize faults.

SPECIFICATIONS

DDL-601A Office

Dimensions:	W=19", L=12", H=5-1/4"
Power Input Options:	21 to 32 Vdc, 24 Vdc nominal, @50 watts maximum. 105 to 125 Vac, 120 Vac nominal, @ 35 watts maximum, .34 amps, maximum.
Temperature Range:	0°C to +50°C
Baud Rates to Field:	75, 100, 200, 400, 600, 1200 or 2400 baud
Baud Rates to CTC Controller:	110, 150, 300, 600, 1200, 1600, 2400, 4800, or 9600 baud (serial mode)
Maximum System Capability:	127 remote field units, 10,080 controls, 18,144 indications
Communications Modes:	Serial or parallel to CTC controller: Half duplex Serial to carrier: Half duplex

DDL-601A, DDL-601B and DDL-601BX Fields

Dimensions:	W=10-1/2", L=19", H=13-3/4"
Power Input Options:	9 to 18 Vdc, 12 Vdc nominal, @ 2 amps maximum, 5% ripple, max. 21 to 32 Vdc, 24 Vdc nominal @ 1 amp maximum, 5% ripple, max. 105 to 125 Vac, 120 Vac nominal @ .5 amp maximum, 50 or 60 Hz
Temperature Range:	0°C to +50°C
Baud Rates with Office:	Same as Office Code Unit. Reads and automatically selects incoming rate.
Maximum System Capability:	144 indications, 80 controls per unit
Communications Mode:	Half duplex
Relay Contact and Opto Isolator Specifications:	Refer to parts tabulation descriptions.

HOW TO ORDER

If planning a new system using DDL-601A-B/X equipment, consult US&S Systems Engineering or Sales before ordering any units. This will insure development of a system with the most cost-effective and efficient use of equipment. Service manual 6199 also provides detailed instructions and specifications for this purpose. Use the following parts tabulation to order replacement equipment for present DDL-60A-B/X systems or to expand these systems. Note: The DDL-601A, -601B and -601BX Field Code Units do not have standard top part numbers. These units are ordered by specifying the empty cardfile and required plug-in circuit boards. Make certain to order the correct printed circuit boards for the respective field code units. Not all boards are interchangeable between these units. The DDL-601A Office is shipped with all required boards installed.

DDL-601A OFFICE

PART NO.	DESCRIPTION / ADDITIONAL SPECIFICATIONS	APPLICATION NOTES
N451583-0102	DDL-601A Office Code Unit, dc power input type.	--
N451583-0103	DDL-601A Office Code Unit, ac power input type.	--
N451522-6301	Microprocessor PCB	Standard for both ac and dc code units.
N451522-6401	I/O Interface PCB	Standard for both ac and dc code units.
N451522-7601	AC/DC Power Supply	Used in ac powered code unit only.
J725709-0058	DC/DC Power Supply	Used in dc powered code unit only.

DDL-601A, DDL-601B, DDL-601BX FIELD

PART NO.	DESCRIPTION / ADDITIONAL SPECIFICATIONS		APPLICATION NOTES
N451583-0302	DDL-601A, empty cardfile:	1 Power Supply PCB 1 Controller PCB Up to 5 relay-output PCB's Up to 9 optical-input PCB's	Uses the following PCB's: Power Supply: N451441-3301, N451441-3303, N451441-4601 Relay-Output: N451441-4201, N451441-3601, N451441-4701 Optical-Input: N451441-3201, N085722-1001 Controller: N451441-3501
N451583-0303	DDL-601B, DDL-601BX empty cardfile:	Same PCB capacity as above.	DDL-601B uses the following PCB's: Power Supply: N451441-3301, N451441-3303, N451441-4601 Relay-Output: N451441-4201, N451441-3601, N451441-4701, N451441-4401 Optical-Input: N451441-3201, N085722-1001 Controller: N451441-4301 DDL-601BX uses the same PCB's as the DDL-601B, plus (contact US&S regarding applic.): Relay Output: N451441-4501 Controller: N451441-4304
N451441-3301	Power Supply Converter PCB, 21 to 32 Vdc input (Refer to "Specifications" for additional data.)		Used in all field units.
N451441-3303	Power Supply Converter PCB, 9 to 18 Vdc input (Refer to "Specifications" for additional data.)		Used in all field units.
N451441-4601	Power Supply Converter PCB, 105 to 125 Vac input (Refer to "Specifications" for additional data.)		Used in all field units.
N451441-4201	Relay-Output PCB, Control Bit & Deliver	Contacts: .5 amp (max.), 50 Vdc (max.) = 10 VA (max.). Externally-strobed output.	Used in all field units when external circuits are equipped with final-stick relays (i.e. US&S KP type). Note: Order this board when replacing PCB N451441-3401 (obsolete).
N451441-3601	Relay-Output PCB, Control Delivery	Contacts: 1.0 amp (max.), 50 Vdc (max.) = 50 VA (max.). Non-strobed output.	Used in all field units when external circuits are equipped with neutral relays.
N451441-4401	Relay-Output PCB, Constant Delivery	Contacts: 1.0 amp (max.), 50 Vdc (max.) = 50 VA (max.). Relays hold state at power off.	Used in -601B/X field units when external circuits are equipped with neutral relays.
N451441-4501	Relay-Output PCB, Checkback Control Delivery	Contacts: 1.0 amp (max.), 50 Vdc (max.) = 50 VA (max.). Non-strobed output.	Used in -601B/X field units when external circuits are equipped with neutral relays and office is programmed to verify output bits prior to delivery.
N451441-4701	Relay-Output PCB, Control & Delivery	Contacts: .5 amp (max.), 50 Vdc (max.) = 10 VA (max.). Internally-strobed output.	Used in all field units when external circuits are equipped with final-stick relays (i.e. US&S KP type).
N451441-3501	Controller PCB		Used in DDL-601A Field only.
N451441-4301	Controller PCB		Used in DDL-601B Field only.
N451441-4304	Controller PCB		Used in DDL-601BX Field only (contact US&S regarding applications).
N451441-3201	Optical-Input PCB, Indication-Opto	Optical-coupler input: 8 to 16 Vdc, 3 mA	Used in all field units.
N085722-1001	Optical-Input PCB, Transmitter-Opto	Optical-coupler input: 5 to 32 Vdc or Vac, 3 mA	Used in all field units.

DDL-601A, DDL-601B, DDL-601BX FIELD (CONT'D)

PART NO.	DESCRIPTION / ADDITIONAL SPECIFICATIONS		APPLICATION NOTES
N451458-3001	Modem Interface Connector/Cable Assembly,	1 ft.	Available only for interface to US&S DCS-600 modem (5V TTL).
N451458-3002		2 ft.	
N451458-3003		3 ft.	
N451458-3301	DC Power Input Connector/Cable Assembly,	5 ft.	Use with both N451441-3301 or -3303 Power Supply Converter PCB's.
N451458-3302		10 ft.	
N451458-3303		15 ft.	
N451458-3304		20 ft.	
N451458-3305		25 ft.	
N451458-3306		30 ft.	
N451458-3307		35 ft.	
N451458-3901	AC Power Input Connector/Cable Assembly,	5 ft.	Use with both N451441-4601 Power Supply Converter PCB only.
N451458-3902		10 ft.	
N451458-3903		15 ft.	
N451458-3904		20 ft.	
N451458-3905		25 ft.	
N451458-3906		30 ft.	
N451458-3907		35 ft.	
N451458-3201	Relay-Output Connector/Cable Assembly,	5 ft.	Use with N451441-4201, -3601, -4401 -4501 Relay-Output PCB's. For applications that use heel, front and back contacts of external relays.
N451458-3202		10 ft.	
N451458-3203		15 ft.	
N451458-3204		20 ft.	
N451458-3205		25 ft.	
N451458-3206		30 ft.	
N451458-3207		35 ft.	
N451458-4201	Relay-Output Connector/Cable Assembly,	5 ft.	Use with N451441-3601, -4401, -4501 Relay-Output PCB's. For applications that use heel, and front contacts of external relays only.
N451458-4202		10 ft.	
N451458-4203		15 ft.	
N451458-4204		20 ft.	
N451458-4205		25 ft.	
N451458-4206		30 ft.	
N451458-4207		35 ft.	
N451458-4101	Relay-Output Connector/Cable Assembly,	5 ft.	Use with N451441-4701 Relay-Output PCB only.
N451458-4102		10 ft.	
N451458-4103		15 ft.	
N451458-4104		20 ft.	
N451458-4105		25 ft.	
N451458-4106		30 ft.	
N451458-4107		35 ft.	
N451458-3101	Relay-Output Connector/Cable Assembly,	5 ft.	Use with N451441-3201 and N085722 Optical-Input PCB's.
N451458-3102		10 ft.	
N451458-3103		15 ft.	
N451458-3104		20 ft.	
N451458-3105		25 ft.	
N451458-3106		30 ft.	
N451458-3107		35 ft.	

TEST EQUIPMENT

N451400-1801	TS-101 Test Set	DDL-601A Office software and hardware tests.
N451584-1001	DDL-601A Office Carrier Test Panel	Tests modem interface with DDL-601A Office
N451400-1102	DDL-601A Office Test Simulator	System I/O testing with DDL-601A Office
N451400-2201	TS-203 Test Set, Optical-Input and Power Supply PCBs.	For PCB's N451441-3201, -3301 -3303 & N085722-1001.
N451400-3201	TS-204 Test Set, DDL-601A Field Controller PCB.	For PCB N451441-3501 only.
N451400-3202	TS-204 Test Set, DDL-601B/X Field Controller PCBs.	For PCBs N451441-4301 and -4304.
N451400-3101	TS-205 Test Set, Relay-Output PCBs.	For all DDL-601A-B/X Relay-Output PCBs.
N451400-1202	DDL-601A-B/X Field Test Simulator	Tests DDL-601A-B/X Field Code Units

FIELD CODE EMULATOR
FCE-500

The FCE-500 is designed as a direct replacement for US&S 506, 506A, 506C, 514, 502A, 504B and 504C relay type field code equipment. It has microprocessor electronics, but is equipped with wiring terminals identical to those on the existing relay-based system (LCS and storage or extension units). This permits installation of the FCE-500 system with little or no modifications to existing equipment or circuits. The FCE-500 also allows cost-effective conversion of the entire relay-based code system to high-speed digital operation.

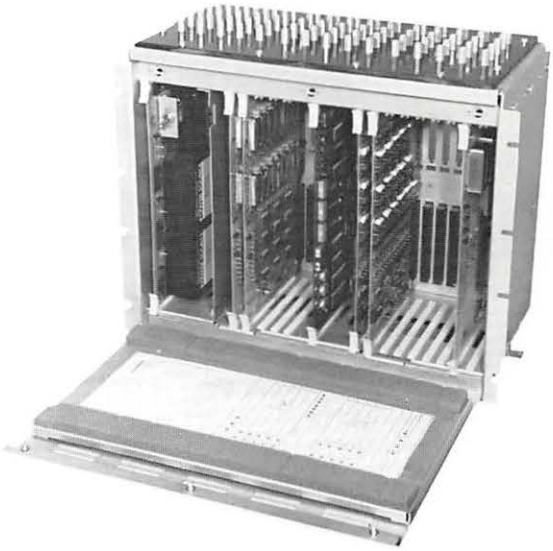

DESCRIPTION

Different models of the FCE-500 are provided for the different code system emulations. However, all basically consist of a 19 inch printed circuit board cardfile that can be shelf or rack-mounted. The cardfile contains the following basic boards:

CONTROLLER PCB - Contains the control logic, field adjustment switches and the software that emulates the existing code system.

POWER SUPPLY CONVERTER PCB - Converts existing dc power in facility to levels needed by the FCE-500's internal electronics.

RELAY-OUTPUT PCB - Converts digital messages from the Controller PCB to relay-contact outputs for the existing control circuits. Outputs are electrically and timing-compatible with the existing circuits. One relay-output PCB handles all of the control bit functions of the LCS unit. Up to four additional relay-output boards handle control bit functions for any storage or extension units.

OPTICAL-INPUT PCB - Electrically isolates and converts relay-contact inputs to digital form for the Controller PCB. One optical-input PCB handles all of the indication bit functions of the LCS unit. Up to four additional optical-input boards handle indication bits functions for any storage/ext. units.

CODE LINE INTERFACE PCB - Permits communications between the existing dc code line and the high speed logic of the Controller Board. Different versions of this board are provided to interface the different types of code lines.

A standard terminal post board is mounted on top of the FCE-500 card file. This matches the terminal post board on the old LCS unit, permitting direct reuse of the existing LCS wiring connectors. The FCE-500 is available with separate terminal post boxes that accept wiring from any existing storage or extension units. These boxes have no electronics of their own. All functions of the storage or extension units are now handled by the single FCE-500.

APPLICATIONS AND UPGRADING

The FCE-500 will directly replace any 506, 506A, 506C, 514, 502A, 502B and 504C relay code system on a one-by-one basis (other relay code stations still operational) or on a system-wide basis. FCE-500 systems can also be installed as new locations in a relay-based code system. No changes are required in office relay code circuits. Once all field code stations are converted to FCE-500 units, the entire code system can be converted to all-digital operation, including high speed modem communications with a digital code office.

FEATURES

- Single FCE-500 Cardfile replaces LCS and any storage or extension units.
- Operationally compatible with relay field and office code equipment.
- Designed for direct changeover of present LCS and storage or extension unit wiring.
- Cost-effective relay-logic to digital logic conversion on station-by-station basis.
- Allows total system conversion with digital code office, high speed modem communications.
- Plug-in PCB's for ease of maintenance, minimum down time.
- Field troubleshooting with LED indications.

COPYRIGHT 1988, UNION SWITCH & SIGNAL INC.

SPECIFICATIONS

Cardfile Dimensions: 19" W x 15-5/8" H x 10-5/8" D

Cardfile Mounting: Shelf or standard 19" rack.

Storage/Ext. Box* Dimensions 506, 506A, 506C & 514: 9-7/8" W x 3" H x 10" D
502A, 504B & 504C: 12-13/16" W x 3" H x 6-31/32" D

Storage/Ext. Box* Mounting Shelf

Cardfile Connections: 506, 506A, 506C & 514: 96 terminal posts on 4 plug boards
502A, 504B & 504C: 75 terminal posts on 3 plug boards

*506, 506A, 502A, 504B, & 504C: Refers to FCE-500 storage/ext. box that replaces existing storage unit.

506C & 514: Refers to FCE-500 storage/ext. box that replaces existing extension unit.

Storage/Ext. Box* Connections 506, 506A, 506C & 514: 48 terminal posts on 1 plug board

502A, 504B & 504C: 50 terminal posts on 2 plug boards

Data Capabilities: 506, 506A, 506C, 514, 504B, 504C: 7 controls per output board (max), 7 indications per input board, (max), 35 total controls and 35 total indications (max.)

502A: 5 controls per output board (max.), 7 indications per input board (max.), 25 total controls and 35 total indications (max.)

Power Input: 9 to 18 Vdc, 12 Vdc nominal

Temperature Range: -40° to +70° C

HOW TO ORDER

COMPLETE SYSTEMS

Ordering Example #1 - No Storage or Extension units: N451583-0901, replaces a 506 LCS unit only. Cardfile contains standard boards, plus one relay-output PCB and one optical-input PCB (LCS controls and indications).

Ordering Example #2 - With Storage or Extension unit(s): N451583-0923, replaces a 502A LCS unit and two storage units. Cardfile contains standard boards, plus three relay-output PCB's and three optical-input PCB's (controls and indications for LCS and two storage units). System also includes storage/etx. box and cable assemblies N451458-5401 (5 foot cable) and N451458-5402 (7 foot cable). Refer to page 3 for cable and PCB part tabulation.

Note: Contact US&S Sales for special FCE-500 configurations not covered in this catalog.

PART NO.	DESCRIPTION	PART NO.	DESCRIPTION
N451583-0906	506A Emulation, with no storage units	N451583-0918	514 Emulation, with 2 exten. units
N451583-0907	506A Emulation, with 1 storage unit	N451583-0919	514 Emulation, with 3 exten. units
N451583-0908	506A Emulation, with 2 storage units	N451583-0920	514 Emulation, with 4 exten. units
N451583-0909	506A Emulation, with 3 storage units	N451583-0921	502A Emulation, with no storage units
N451583-0911	506C Emulation, with no exten. units	N451583-0922	502A Emulation, with 1 storage unit
N451583-0912	506C Emulation, with 1 exten. unit	N451583-0931	504C Emulation, with no storage units
N451583-0913	506C Emulation, with 2 exten. units	N451583-0932	504C Emulation, with 1 storage unit
N451583-0916	514 Emulation, with no exten. units	N451583-0933	504C Emulation, with 2 storage units
N451583-0917	514 Emulation, with 1 exten. unit	N451583-0934	504C Emulation, with 3 storage units
		N451583-0935	504C Emulation, with 4 storage units

EXPAND EXISTING SYSTEM

Ordering Example #3 - Existing 506C-emulation unit with no storage units. Expand for 10 additional controls and 10 additional indications:

1. Order one Sequential Delivery PCB N451441-5001 from page 3 for additional controls 1 through 7. This PCB to be installed next to -5001 PCB presently in cardfile.
2. Order another N451441-5001 PCB for additional controls 8 through 10. This PCB to be installed next to the other two -5001 PCBs now in cardfile.
3. Order two additional Transmitter-Opto PCBs (N085722-1001) in the same manner as the additional Sequential-Delivery PCBs. One Transmitter-Opto will handle additional indications 1 through 7. The other will handle additional indications 8 through 10.
4. Since the additional output and input PCBs represent the 1st and 2nd storage units of the old 506C system, order storage box/cable assembly N451458-5101 (page 3) for added controls/indications 1 through 7. Order storage box/cable assembly N451458-5102 for added controls/indications 8 through 10. If these cable assemblies are not long enough, order two of assembly N451458-5105.

Ordering Example #4 - Existing 504B-emulation unit with three storage units. Expand for 5 additional controls and 5 additional indications:

1. Order one Control Delivery PCB N451441-3601 from page 3 for additional controls 1 through 5. This PCB to be installed next to the other -3601 PCBs presently in the cardfile.
2. Order one Transmitter-Opto PCB N085722-1001 from page 3 for additional indications 1 through 5. This PCB to be installed next to the other -1001 PCBs presently in the cardfile.
3. Since the additional output and input PCBs represent the 4th storage unit of the old 504B system, order storage box/cable assembly N451458-5504 from page 3 for added controls/indications 1 through 5. If this cable assembly is not long enough, order two of assembly N451458-5505.

ORDERING REFERENCES

REPLACEMENT AND TEST EQUIPMENT

PART NO.	DESCRIPTION	APPLICATIONS
N451458-5101	1st storage/ext. box and cable, 5 ft.	Replace 506 & 506A #1 storage unit, 506C & 514 #1 extension unit.
N451458-5102	2nd storage/ext. box and cable, 7 ft.	Replace 506 & 506A #2 storage units, 506C & 514 #2 extension unit.
N451458-5103	3rd storage/ext. box and cable, 9 ft.	Replace 506 & 506A #3 storage units, 506C & 514 #3 extension unit.
N451458-5104	4th storage/ext. box and cable, 11 ft.	Replace 506 & 506A #4 storage units, 506C & 514 #4 extension unit.
N451458-5105	xth storage/ext. box and cable, 17 ft.	Replace 506 & 506A storage units, 506C & 514 extension units. Use when storage or extension unit is not mounted adjacent to LCS (i.e. different shelf).
N451458-5401	1st storage/ext. box and cable, 5 ft.	Replace 502A #1 storage unit.
N451458-5402	2nd storage/ext. box and cable, 7 ft.	Replace 502A #2 storage unit.
N451458-5403	3rd storage/ext. box and cable, 9 ft.	Replace 502A #3 storage unit.
N451458-5404	4th storage/ext. box and cable, 11 ft.	Replace 502A #4 storage unit.
N451458-5405	xth storage/ext. box and cable, 17 ft.	Replace 502A storage units. Use when storage unit is not mounted adjacent to LCS (i.e. different shelf).
N451458-5501	1st storage/ext. box and cable, 5 ft.	Replace 504B & 504C #1 storage unit.
N451458-5502	2nd storage/ext. box and cable, 7 ft.	Replace 504B & 504C #2 storage unit.
N451458-5503	3rd storage/ext. box and cable, 9 ft.	Replace 504B & 504C #3 storage unit.
N451458-5504	4th storage/ext. box and cable, 11 ft.	Replace 504B & 504C #4 storage unit.
N451458-5505	xth storage/ext. box and cable, 17 ft.	Replace 504B & 504C storage units. Use when storage unit is not mounted adjacent to LCS (i.e. different shelf).
N451441-4305	Controller PCB	All systems. Must be field programmed for the particular code system emulation.
N451441-7601	Power Supply Converter PCB	All systems. 9.5 to 35 Vdc input. +5Vdc, +12 Vdc, -12Vdc output. Note: This PCB replaces N451441-3303 in all applications.
N451441-5001	Sequential Delivery PCB (relay-output)	506, 506A, 506C & 514 systems. Provides sequential output of controls.
N451441-3601	Control Delivery PCB (relay-output)	502A, 504B & 504C systems. Provides parallel output of controls.
N085722-1001	Transmitter-Opto PCB (optical-inut)	All systems. Accepts relay contact inputs, 5 to 32 volts ac or dc. (PCB name from previous application).
N451441-6801	FRC Parallel Interface PCB	506, 506A, 506C, 514, 504B & 504C. Interface with parallel dc code line.
N451441-7001	FRC Serial Interface PCB	502A. Interface with serial dc code line.
N451400-2201	TS-203 Test Set	Test Transmitter-Opto PCB.
N451400-3202	TS-204 Test Set	Test Controller PCB.
N451400-3101	TS-205 Test Set	Test Sequential Delivery and Control Delivery PCB's.

SLOT	PCB
1	Power Supply Converter N451441-7601
2	Output (LCS Controls) N451441 -5001 or -3601
3 - 6	Output (1st thru 4th Storage/ Ext. Unit) -5001 or -3601
7	Controller PCB N451441-4305
8	Input (LCS Indications) N085722-1001
9 - 12	Input (1st thru 4th Storage/ Ext. Unit) N085722-1001
13, 14	Not Used
15	FRC Interface N451441-6801 or -7001
16	Not Used

FCE-500 CARDFILE (NOT TO SCALE)

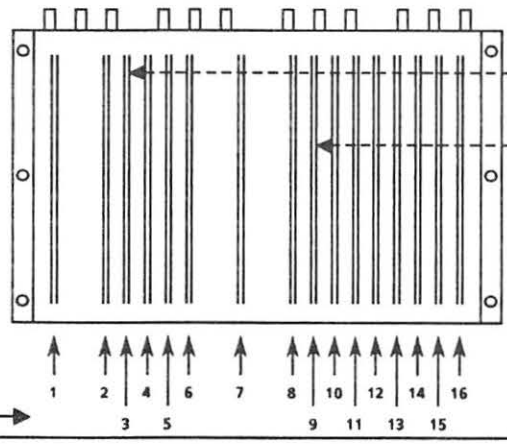

TYPICAL STORAGE/EXT. UNIT INSTALLATION

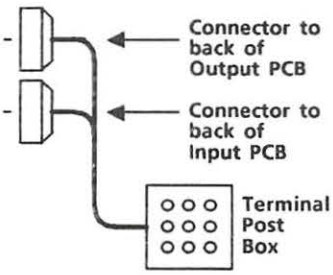

Example Shown Above: 1st Storage/Ext. Unit for Output PCB in slot 2 and input PCB in slot 9.

GENISYS® NON-VITAL LOGIC EMULATOR

The microprocessor-based GENISYS Non-Vital Logic Emulator (NVLE) enables development of non-vital logic control systems or emulation of existing relay-based systems. The control logic may be written by the customer, using a simple but highly flexible logic statement language that does not require a background in computer programming. Circuit logic may be developed and tested on an IBM or Compaq personal computer and then loaded into the GENISYS unit's own memory chips. The GENISYS Development System provides the user all of the equipment necessary to perform these tasks.

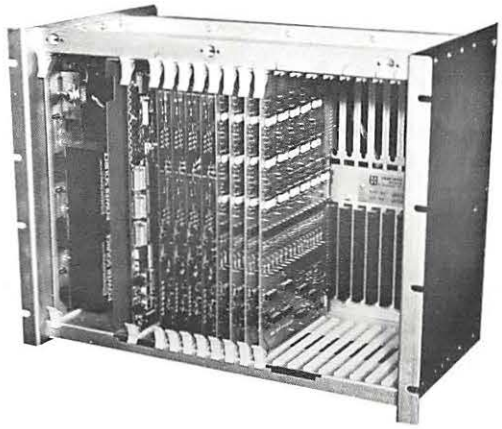

DESCRIPTION

The basic GENISYS unit consists of a printed circuit board cardfile that may contain up to four different types of boards (18 total boards). Parallel I/O data with local circuits, high speed serial I/O with other systems and operating power are all interfaced to the boards using 44-contact PCB edge connectors that fit through slots in the rear of the card file. The circuit boards include:

Controller - The Controller PCB contains the GENISYS executive logic and high capacity programmable read-only memory (PROM) chips that carry the customer's application program. This board also contains various manual switches and jumpers to set up basic hardware functions such as carrier and data time delays.

Power Supply Converter - The Power Supply Converter PCB converts facility power to levels suitable for the GENISYS internal circuitry. As single dc input PCB is provided to handle input voltages over a range of 9.5 to 35 Vdc. An ac input PCB is provided for standard 120 Vac power.

Relay-Output PCB - The relay-output PCB converts Controller PCB commands into relay contact outputs for driving external relay coils. Three options are available to accomodate specific types of external circuits. All provide 16 outputs.

Optical-Input PCB - The Optical-Input PCB electrically isolates input signals (i.e. relay contact) and delivers them to the Controller PCB for processing. One of the two options available provides an assured minimum input threshold voltage of 5 Vdc. Both provide 16 inputs.

These circuit boards may be arranged in the cardfile according to the application. Sixteen card file slots are available for any desired combination of relay-output and/or optical-input PCB's.

APPLICATION NOTES

The GENISYS system is typically used for code system applications previously handled by relay-logic or special-purpose digital logic. It may be employed as a standard field code unit, using pre-programmed application logic for direct interface to an office computer or an office code version of GENISYS. The system may also be specially programmed to combine standard code functions with customized application logic such as final stick circuits, local control panel interface or field meet/pass logic. System configurations may include stand-alone units with local inputs and/or outputs only, or Slave GENISYS units supervised by a Master GENISYS unit or computer. Some systems may require a modem for remote communications. Options include EIA standard RS-423 (RS-232C) compatible or the US&S DCS-600 (5V TTL).

GENISYS is also fully compatible with the US&S MICROLOK Vital Interlocking Control system, and is often integrated with MICROLOK as part of a complete interlocking system development or upgrade. The GENISYS unit serves as the non-vital interface to the office and/or local control panel, while the MICROLOK system functions as a Slave to the GENISYS unit.

FEATURES

- Application logic can be developed, tested and loaded into memory chips by the user.
- Simple but flexible application program language can be used by circuit designers without computer backgrounds.
- Suitable for many non-vital logic applications.
- Stand-alone or multi-unit system configurations.
- System expansion through serial communications ports.
- EIA or 5V TTL-compatible communications.
- Plug-in PCB design for flexible I/O development, ease of maintenance, minimum down time.
- LED indicators for general system monitoring.
- Direct interface to US&S's MICROLOK system.

HOW TO ORDER

If planning a new system using GENISYS, consult US&S Systems Engineering or Sales before ordering any units. This will insure development of a system with the most cost-effective and efficient use of equipment. Service manuals 6300A, 6300B and 6300C also provides detailed instructions and specifications for this purpose. Contact US&S for copies of these manuals.

Use the parts tabulation on the back of this sheet to order replacement equipment for present GENISYS systems or to expand these systems. There are no standard part numbers for fully equipped GENISYS units. Instead, the empty cardfile is ordered, along with the required complement of printed circuit boards.

COPYRIGHT 1988, UNION SWITCH & SIGNAL INC.

SPECIFICATIONS

Unit Dimensions:	W = 10-1/2", L = 17-1/4", H = 13-3/.4"
Unit Mounting:	Standard 19" equipment rack.
I/O Connections:	44-contact PCB edge connectors, all PCB's.
Power Options:	9 to 18 Vdc, 12 Vdc nominal, @ 5 amps max., 5% ripple max. 21 to 32 Vdc, 24 Vdc nominal, @ 3 amps max., 5% ripple max. 105 to 125 Vac, 120 Vac nom., @ 3 amps max., 50 or 60 Hz.
Temp. Range:	-40 to +70°C
Local I/O Capab.:	256 inputs and/or outputs per unit.
Master/Slave Sys.:	255 Slave units maximum, per Master. Practical configurations in range of 50 to 100 units.
Serial Data Options:	EIA RS-423 (RS-232C compatible) or US&S 5 volt TTL (DCS-600 modem).
Bit Rates:	50, 75, 110, 134, 150, 300, 600, 1200, 1800, 2400, 3600, 4800, 7000, 9600 baud.
Application Logic:	40K bytes capacity, maximum.
Defined Relay Coils:	1450 coils maximum defined in application logic; no fixed limit on contacts per relay.
Software Timers:	10 to 250 msec., resolution: ±5 msec. 1 to 25 sec., resolution: ±50 msec. 1 to 25 min., resolution: ±3 sec.

Empty Card File

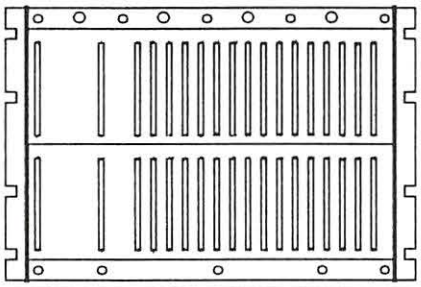

PART NO.	DESCRIPTION
N085718-1009	Empty card file. Capacity: 1 Power Supply Converter, 1 Controller, up to 16 relay-output and/or optical-input PCB's.

Printed Circuit Boards

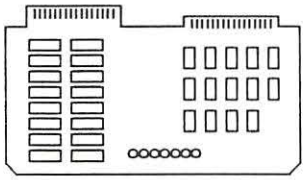

PART NO.	DESCRIPTION
N451441-5602	Controller PCB
N451441-7601	Power Supply Converter PCB, 9.5 to 35 Vdc input. Note: This PCB replaces PCBs N451441-3301 and N451441-3303 in all dc installations.
N451441-4601	Power Supply Converter PCB, 120 Vac input, nominal (refer also to specs.).
N451441-3601	Relay-Output PCB, Control Delivery. Contacts: 1.0 amps max., 50 Vdc max., or 50 VA. Non-strobed output.
N451441-7101	Relay-Output PCB, Constant Delivery. Contacts: 1.0 amps max., 50 Vdc max., or 50 VA. Relays hold state at power off. Note: This PCB replaces PCB N451441-4401.
N451441-4701	Relay-Output PCB, Control & Delivery. Contacts: .5 amps max., 50 Vdc max., or 10 VA. Internally-strobed output.
N451441-7202	Optical-Input PCB. Input voltage: 5 to 32 Vdc or Vac; 5 Vdc assured minimum input threshold voltage. Note: This PCB replaces PCBs N451441-5804 and N451441-7201.
N451441-5802	Optical-Input PCB. Input voltage: 5 to 32 Vdc or Vac (input may be sensed at less than 5 Vdc.)

Cable Assemblies to Relay-Output PCBs, Optical Input PCBs, and Power Supply Converter PCBs

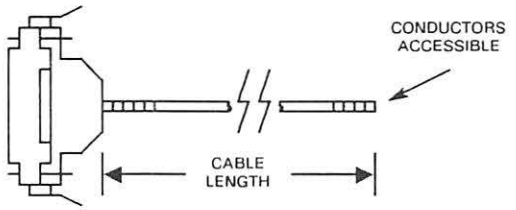

PART NO.	DESCRIPTION	
N451458-3201	5 ft.	Connector/Cable Assembly for relay-output PCB's N451441-3601 and N451441-7101. Use with relay circuits employing front, back and heel contacts.
N451458-3202	10 ft.	
N451458-3203	15 ft.	
N451458-3204	20 ft.	
N451458-3205	25 ft.	
N451458-3206	30 ft.	
N451458-3207	35 ft.	
N451458-4101	5 ft.	Connector/Cable Assembly for relay-output PCB N451441-4701.
N451458-4102	10 ft.	
N451458-4103	15 ft.	
N451458-4104	20 ft.	
N451458-4105	25 ft.	
N451458-4106	30 ft.	
N451458-4107	35 ft.	
N451458-4201	5 ft.	Connector/cable assembly for relay-output PCB's N451441-3601 and N451441-7101. Use with relay circuits employing front and heel contacts only.
N451458-4202	10 ft.	
N451458-4203	15 ft.	
N451458-4204	20 ft.	
N451458-4205	25 ft.	
N451458-4206	30 ft.	
N451458-4207	35 ft.	
N451458-3101	5 ft.	Connector/cable assembly for Optical-Input PCB's N451441-7202 and N451441-5802.
N451458-3102	10 ft.	
N451458-3103	15 ft.	
N451458-3104	20 ft.	
N451458-3105	25 ft.	
N451458-3106	30 ft.	
N451458-3107	35 ft.	
N451458-3301	5 ft.	Connector/cable assembly for Power Supply PCB N451441-7601.
N451458-3302	10 ft.	
N451458-3303	15 ft.	
N451458-3304	20 ft.	
N451458-3305	25 ft.	
N451458-3306	30 ft.	
N451458-3307	35 ft.	
N451458-3901	5 ft.	Connector/Cable Assembly for Power Supply PCB N451441-4601.
N451458-3902	10 ft.	
N451458-3903	15 ft.	
N451458-3904	20 ft.	
N451458-3905	25 ft.	
N451458-3906	30 ft.	
N451458-3907	35 ft.	

GENISYS Development System

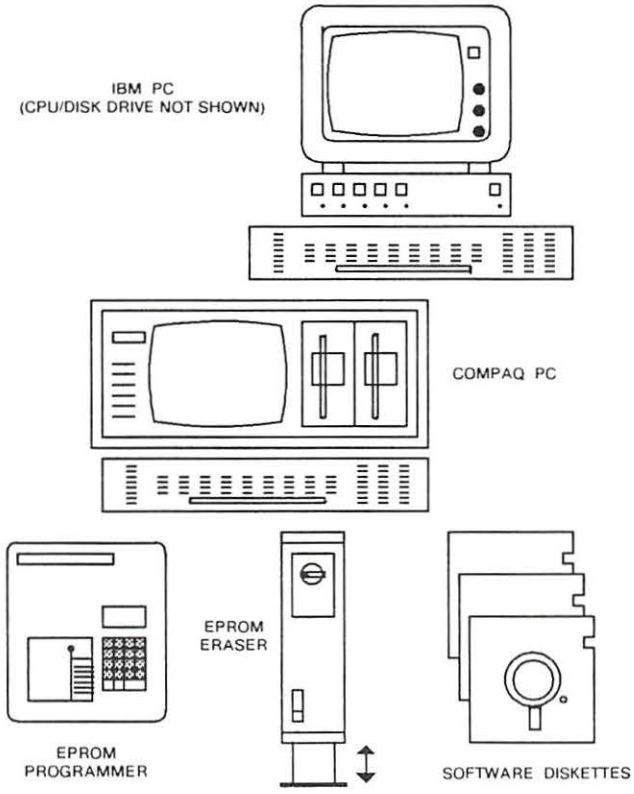

PART NO.	DESCRIPTION
X451232-0201	G.D.S user programming kit: IBM PC, PROM programmer, PROM eraser, cable, instructions, floppy disks.
X451232-0202	G.D.S user programming kit: Compaq PC, PROM programmer, PROM eraser, cable, instructions, floppy disks.
N451233-0101	IBM personal computer w/G.D.S labels.
N451233-0101	Compaq P.C. w/G.D.S. labels.
J703105-0003	PROM programmer
N451458-7201	Cable, PROM programmer to PC.
J703105-0005	PROM eraser.
N451232-0101	G.D.S*, floppy disk version.
N451232-0102	G.D.S*, hard disk version.

Pre-Programmed Code System EPROMs

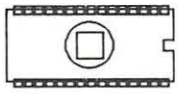

PART NO.	DESCRIPTION
N451575-0904	0 controls, 16 indica.
N451575-0905	1 control, 15 indica.
N451575-0906	2 controls, 14 indica.
N451575-0907	3 controls, 13 indica.
N451575-0908	4 controls, 12 indica.
N451575-0909	5 controls, 11 indica.
N451575-0910	6 controls, 10 indica.
N451575-0911	7 controls, 9 indica.
N451575-0912	8 controls, 8 indica.
N451575-0913	9 controls, 7 indica.
N451575-0914	10 controls, 6 indica.
N451575-0915	11 controls, 5 indica.
N451575-0916	12 controls, 4 indica.
N451575-0917	13 controls, 3 indica.
N451575-0918	14 controls, 2 indica.
N451575-0919	15 controls, 1 indica.
N451575-0920	16 controls, 0 indica.

Pre-programmed code system EPROMs (maximum controls and indications listed)

Note: N451575-0910 is US&S standard.

Misc. Installation and Maintenance Items

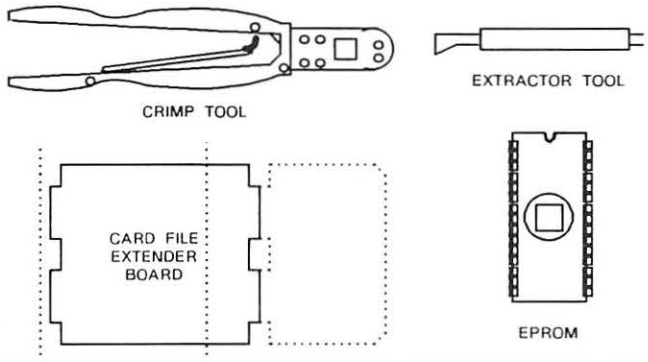

PART NO.	DESCRIPTION
N451170-1001	44-Way Connector Kit (see below for parts breakdown)
J396092	Crimp Tool for 44-Way Connector Pins
J396088	Extraction Tool for 44-Way Connector Pins
N451441-1201	Extender Board
J715029-0409	Blank Application Program EPROM (temperature tested)
J451575-0903	GENISYS Test PROM (Refer to SM-6300C for usage)

44-Way Connector Kit N451170-1001

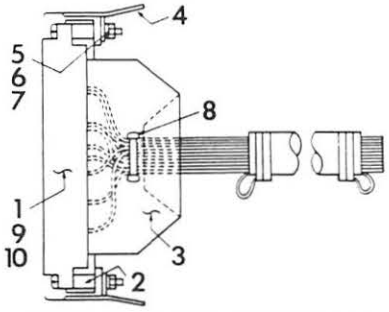

REF.	PART NO.	DESCRIPTION
1	J713797	Block
2	M451393-0202	Spacer
3	M451187-6601	Bracket, Strain Relief
4	J680190-001	Latch
5	J507297-0114	Screw, 4-40 x 7/8 Panhead
6	J047765	Washer, #4 Lock
7	J480006	Nut, #4-40 Hex Steel
8	J703310	Cable Tie
9	J709248	Contact Pin
10	J718271	Keying Plug

PCB Test Sets

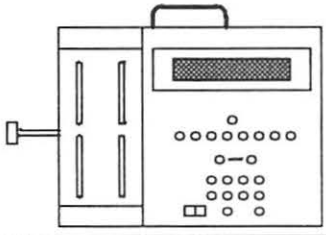

PART NO.	DESCRIPTION
N451400-3101	TS-205 Test Set, for Relay-Output PCBs N451441-3601, -4701 and -7101.
N451400-2201	TS-203 Test Set, for Optical-Input PCBs N451441-7202 and -5802, and for Power Supply Converter PCB N451441-7601

EVENTTRAK
DIGITAL EVENT RECORDER SYSTEM

EVENTTRAK is a microprocessor-based digital event recording system typically used at railroad interlockings to record state changes in wayside circuits. The basic Monitor Unit can store up to 3000 events before returning to the beginning of the event file to record additional data. This is expandable in increments of 3000 events up to 12,000 events, making EVENTTRAK suitable for systems with small or large data requirements. Still greater data capacity can be realized by connecting multiple monitoring units together in a single, time-synchronized system. Event data stored in the Monitor Unit can be output to a remote office or accessed and reviewed on-site with a wide variety of standard computer terminals or printers.

EVENTTRAK MONITOR UNIT (LEFT), INTERPRETER UNIT (RIGHT)

The portable EVENTTRAK Interpreter Unit provides fast and reliable downloading of event data stored in a Monitor Unit. After downloading, this data can be output to a terminal or printer at another location. The Interpreter can also be used to manage field Monitor Units from a central office (i.e. downloading, time set, restart recording), and to write, test and load customized mnemonics used by the Monitor Unit's event logging software.

DESCRIPTION

Monitor Unit

The EVENTTRAK Monitor is housed in a compact, rack-mount cardfile. It is equipped with a hinged and lockable front cover, and may be outfitted with up to four wiring connection circuit boards. These boards and cables allow convenient hook-up of external circuit wiring (carrying the event data) to the unit. An industry-standard "D" connector is provided inside the front of the unit for communications with a terminal or printer. The cardfile carries four different types of plug-in printed circuit boards, including:

Controller - The Controller PCB formats all incoming data for storage in the unit's memory chips, and retrieves that data for output to an external display device. This board is equipped with an array of switches, LEDs and digital display that permit on-site set-up of time, date and location data, without removing the board from the cardfile. These controls are also used to review data and conduct troubleshooting. Diagnostic software is included in the Controller PCB program chips as part of the operational software.

RAM - The RAM PCB is used to store the event data for eventual retrieval. This board is equipped with an array of RAM (Random Access Memory) chips for data storage. Four versions of this board are equipped with different amounts of memory to store 3000, 6000, 9000 or 12,000 events. A lithium battery is also mounted on this board to protect the stored data in the event of an external power failure. Data can be held up to four years in this state.

Opto-Input - The Opto-Input PCB conditions incoming event signals (via wiring connector PCBs) for processing by the Controller PCB. Up to four of these boards may be installed in the cardfile. Each board provides 32 inputs to the Controller. The Monitor unit accepts up to 128 inputs in increments of 32.

Power Supply - The Power Supply PCB converts facility power to levels suitable for the Monitor Unit's internal circuits. Versions are available to accept 9.5 to 35 Vdc or 120 Vac power.

Interpreter Unit

The EVENTTRAK Interpreter Unit is housed in a new, light weight case with end-mounted handle for comfortable transport. Controls and indicators are located on a sloped front panel that enhances desktop use. Data and commands are entered on two keypads, while entries and system responses are shown on a large-format, 16-character LED display. Additional discrete LEDs asssist the user during PROM programming.

Lever sockets accept 24-pin and 28-pin PROMs for programming. Other design features include a reset pushbutton and an audible alarm that reports all invalid inputs. Communications cables to the EVENTTRAK Monitor or a terminal are connected to redundant male and female "D" plugs on the outside of the unit. The Interpreter's electronics are contained on two independent microprocessor boards. Access to these boards (for unit set-up or maintenance) is simplified by a hinged, swing-out chassis.

COPYRIGHT 1988, UNION SWITCH & SIGNAL INC.

DESCRIPTION

Interpreter Unit (Cont'd)

Monitor Unit control functions available with the EVENT-TRAK Interpreter include data skip, downloading and data logging restart. All of these functions can be performed on-site at the Monitor unit, or from a central office using a modem with dial-up capability. In addition, the Interpreter can read Monitor Unit clocks from the office and reset individual clocks as required.

The Interpreter also supports the Monitor by assigning special terms ("mnemonics") to the Monitor's event records. These terms are composed by the user, and provide a readily identified name for each input (i.e. "WA" for West Approach). Since the Interpreter handles all required writing, editing and checking functions for the mnemonics PROM, it can also be used as a general-purpose PROM programmer.

Many post-download functions such as Interpreter data skip, printout line length, mnemonics processing and PROM programming can also be conducted from a standard CRT or terminal.

The Interpreter incorporates self-test routines for the internal logic, keypad and display.

FEATURES

Monitor Unit

- Easily expandable input and event memory capacity, up to 128 inputs and 12,000 events.
- Up to five Monitor units linked in time-synchronized system.
- Primary functions (i.e. date, time, skip over data) accessible from remote office, as well as on-site.
- New data can be recorded while stored data is being downloaded to printer or terminal.
- Compatible with most standard computer terminals or printers.
- Data can be viewed or printed with cardfile locked.
- Built-in test software.
- Troubleshooting using on-board controls or terminal.
- Plug-in PCBs for ease of replacement, minimum down-time.
- Unit automatically records and recovers from brown-out; no on-site reset required.
- RAM board battery protects data up to four year in case of power failure.

Interpreter Unit

- Light weight, easy-to-transport unit.
- User-friendly data entry.
- Large format display with clear text messages.
- Audible error alarm.
- Quick data dump, time read/set and logging restart with remote Monitors.
- Wide selection of mnemonic characters.
- Comprehensive PROM editing/verifying functions.
- Can be used as a general-purpose PROM programmer.
- Compatible with most common types of PROMs.
- Multiple self-diagnostic routines.
- Operates over full -40° to +70°C temperature range.
- Performs on-site download of original monitor.

SPECIFICATIONS

Monitor Unit

Card File Dimensions:	W = 12", H = 15", D = 10-1/2"
Card File Mounting:	Standard 19" equipment rack.
Temperature Range:	-40° to +70° C @ 95% rel. humidity.
Power Input Options:	9.5 to 35 Vdc, @ 50 W, 5% ripple.
	105 to 125 Vac, 120 Vac nominal, @ 1.0 amps max., 50 or 60 Hz.
Event Inputs:	128 maximum, expanded in 32 input increments.
Event Signal Input:	0.0 to 30 volts dc or ac < 4 Vac/Vdc: Assured logic 0. > 7 Vac: Assured logic 1. < 8.5 Vdc: Assured logic 1.
Impedance per Input:	20K ohms, maximum.
Flashing Input Range:	30 to 400 cycles per minute.
Non-flashing input limit:	0.5 Hz
Input Isolation:	Optical coupler IC, each input
Event Storage:	12,000 events, max., expanded in 3000 event increments.
Communications Options (W/Terminal or Printer):	EIA RS-232C, 5V TTL or 20 mA current loop.
Comm. Bit Rates:	110, 300, 600, 1200, 2400, 4800, 9600 bits per second.

Interpreter Unit

Unit Dimensions:	W = 21", H = 5", D = 13"
Temperature Range:	-40° to +70° C
Power Input:	105 to 125 Vac, 120 Vac nominal, @ 3.0 amps maximum, 50 or 60 Hz.
Event Data Storage:	Up to 12,000 events
Assured Data After Power off:	Up to 4 years
Communications Options:	Interpreter/Monitor: EIA RS423 Interpreter/Terminal: EIA RS423 20 mA current loop.
Communications Bit Rates:	110, 300, 600, 1200, 4800, 9600 bits per second.
Available Mnemonics Library:	! " # $ % & ') (* + , - . / 0 1 2 3 4 5 6 7 8 9 . , < = > ? @ A B C D E F G H I J K L M N O P Q R S T U V W X Y Z ← \ → ↗ _

HOW TO ORDER

To order complete EVENTTRAK Monitor units, use the "COMPLETE MONITOR SYSTEMS" parts tabulation below. These units provide various combinations of event storage, event inputs and power input options. All units are equipped with one Controller PCB, one Power Supply PCB, one RAM PCB, between one and four Opto-Input PCBs and between one and four Ribbon Connector Interface PCBs.

Contact US&S Sales or request US&S service manul SM-6203 for additional information on the Monitor Unit. Use the "SUBASSEMBLIES" tabulation to order replacement equipment for in-service Monitor units. The description of each item may be used to obtain a better understanding of the components that make up the complete systems.

To order the EVENTTRAK Interpreter, refer to the single part number at the bottom of this column. Request Service Manual SM-6309 for additional information on the Interpreter Unit.

COMPLETE MONITOR SYSTEMS

PART NO.	EVENTS	INPUTS	POWER
N451082-3001	3,000	32	9.5 to 35 Vdc
N451082-3002	3,000	64	9.5 to 35 Vdc
N451082-3003	3,000	96	9.5 to 35 Vdc
N451082-3004	3,000	128	9.5 to 35 Vdc
N451082-3005	6,000	32	9.5 to 35 Vdc
N451082-3006	6,000	64	9.5 to 35 Vdc
N451082-3007	6,000	96	9.5 to 35 Vdc
N451082-3008	6,000	128	9.5 to 35 Vdc
N451082-3009	9,000	32	9.5 to 35 Vdc
N451082-3010	9,000	64	9.5 to 35 Vdc
N451082-3011	9,000	96	9.5 to 35 Vdc
N451082-3012	9,000	128	9.5 to 35 Vdc
N451082-3013	12,000	32	9.5 to 35 Vdc
N451082-3014	12,000	64	9.5 to 35 Vdc
N451082-3015	12,000	96	9.5 to 35 Vdc
N451082-3016	12,000	128	9.5 to 35 Vdc
N451082-3033	3,000	32	120 Vac nom.
N451082-3037	6,000	32	120 Vac nom.
N451082-3045	12,000	32	120 Vac nom.
N451082-3048	12,000	128	120 Vac nom.

SUBASSEMBLIES

PART NO.	DESCRIPTION
N451441-7501	Controller PCB (all systems)
N451441-4901	RAM PCB without RAM IC's
N451441-4902	RAM PCB, for all 3000 event systems
N451441-4903	RAM PCB, for all 6000 event systems
N451441-4904	RAM PCB, for all 9000 event systems
N451441-4905	RAM PCB, for all 12,000 event systems
N451441-4802	Opto-Input PCB, all systems
N451441-7601	Power Supply PCB, all dc systems
N451441-4601	Power Supply PCB, all 120 Vac systems
N451657-4501	Ribbon Connector Interface PCB, all systems
N451458-9002	5 ft.
N451458-9003	10 ft.
N451458-9004	15 ft.
N451458-9005	20 ft. Monitor Unit-to-Monitor Unit
N451458-9006	25 ft. cables for time-sychronized
N451458-9007	30 ft. system. Request service Manual
N451458-9008	40 ft. SM-6203 for details.
N451458-9009	50 ft.
N451458-9010	100 ft.
N451458-9001	Time-Synch. System extension cable
N451458-9011	Time-Synch. System "T" cable

INTERPRETER

PART NO.	DESCRIPTION
N451786-0101	EVENTTRAK Interpreter Unit

MISC. ORDERING INFORMATION

1. The EVENTTRAK Monitor was originally equipped with the following PCBs:

Part No.	Description
N451441-5101	Controller PCB
N451441-4802	RAM PCB, 3000 events capacity
N451441-4803	RAM PCB, 6000 events capacity
N451441-4803	RAM PCB, 9000 events capacity
N451441-4804	RAM PCB, 12,000 events capacity
N451441-4801	Opto-Isolator PCB
N451441-3302	Power Supply Converter, 12 Vdc Input
N451441-3301	Power Supply Converter, 24 Vdc Input
N451441-4601	Power Supply Converter, 120 Vac Input
N451605-5402	Ribbon Conn. PCB, Inputs 1 to 32
N451605-5403	Ribbon Conn. PCB, Inputs 33 to 64
N451605-5404	Ribbon Conn. PCB, Inputs 65 to 96
N451605-5405	Ribbon Conn. PCB, Inputs 97 to 128

2. Original EVENTTRAK Interpreter Unit N451400-3301 was provided for downloading and mnemonics programming of the above Monitor Unit. New Interpreter Unit N451786-0101 may be used for on-site downloading, mnemonics generation and PROM programming functions of the original Monitor Unit (other functions not applicable).

3. To upgrade the original Monitor Unit with all functions available in the present Monitor Unit, order new Controller PCB N451441-7501 to replace Controller PCB N451441-5101.

4. Original Interpreter Unit N451400-3301 is not compatible with the upgraded Monitor Unit. Order new Interpreter Unit N451786-0101 for downloading, mnemonics, etc.

5. Wide-range Power Supply Converter PCB N451441-7601 can be ordered as a direct replacement for PCB N451441-3302 <u>or</u> N451441-3301.

6. Opto-Input PCB N451441-4802 can be ordered as a direct replacement for PCB N451441-4801. The -4802 PCB allows interfacing of EVENTTRAK with vital as well as non-vital circuits (request service manual SM-6203 or contact US&S Engineering for details). If ordering Opto-Input PCB N451441-4802, Ribbon Connector Interface PCB N451657-4501 must also be ordered (refer to note 7 below).

7. Ribbon Connector Interface PCB N451657-4501 can be ordered as a direct replacement for any of the old N451605-540X series of PCBs. For example, if the original Monitor Unit was equipped with old PCBs N451605-5402, -5403 and -5404 (96 total inputs), order <u>three</u> of new Ribbon Connector Interface PCB N451657-4501. When this replacement is done, the N451441-4802 Opto-Input PCB(s) must also be ordered to replace Opto-Input PCB N451441-4801 (note 6).

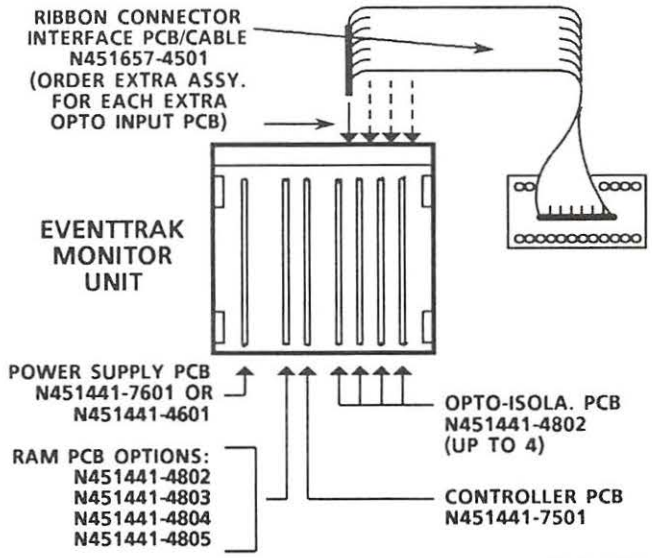

MICROLOK®

MICROPROCESSOR-BASED INTERLOCKING CONTROL SYSTEM

MICROLOK is a microprocessor-based system that performs the vital functions of a relay logic interlocking, but at considerable reduction in hardware and cost. MICROLOK can manage the full range of interlocking subsystems, including signals, switch machines, track circuits, traffic and line wire circuits. MICROLOK is adaptable to large and small interlockings alike for application circuits such as switch, route, approach and time locking, signal and switch control and signal lighting.

Larger application requirements can be handled by linking multiple MICROLOK units via a vital serial data system. MICROLOK can also communicate directly with US&S's MICROCODE-III coded track circuit system and the GENISYS programmable controller.

MICROLOK's plug-in circuit boards interface all vital inputs and outputs, and also form a modular central computer for the system. As a result, system maintenance can be expedited through board swapping. MICROLOK constantly tests itself and cross-checks all inputs and outputs. Built-in error logging provides a thorough and easily accessed file of test results.

MICROLOK employs a comprehensive application logic compiler that a signal engineer can use to design and test the application logic on a personal computer; a background in computer programming is not required. The MICROLOK Development System provides all equipment and software needed to write, test and load the application program.

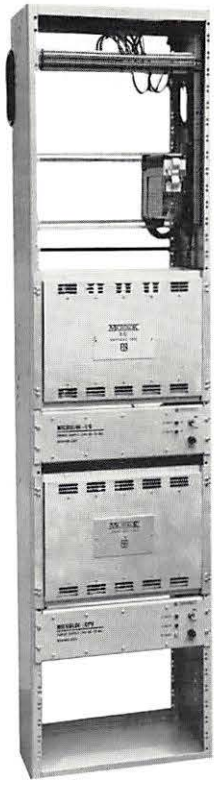

DESCRIPTION

Rack Assembly

MICROLOK is contained in a single 19 inch equipment rack. Wiring from local relay, lamp and power supply circuits is connected to one or two terminal strips (65 terminals each) near the top of the rack.

Each MICROLOK rack contains two printed circuit board card files, the CPU and the I/O. The CPU card file contains the system's controlling logic and serial data ports for communications with other MICROLOK units, GENISYS and/or MICROCODE-III. All local inputs and outputs are interfaced through the I/O card file via cables wired to the terminal strip. A 37-conductor ribbon cable connects local I/O data lines between the CPU and I/O card files.

The MICROLOK rack is equipped with two power supply panels. One provides dedicated operating voltage for the CPU card file electronics. The other supply provides dedicated operating voltage for the I/O card file electronics. (Relay drive and signal lamp power is obtained from a separate external source.)

Relay drive and signal lamp power is routed through the contacts of a US&S PN-150HD relay, which is mounted below the terminal strip. This relay is controlled by the system microprocessor so that power can be removed from all outputs in the event of a safety-critical fault.

An optional Current Loop Adapter may also be mounted in the MICROLOK rack. This unit permits serial communications between two MICROLOK systems over a 20 mA current loop.

CPU and I/O Card File PCBs

The 16-slot CPU card file typically contains four different PCBs. Three of these, the Processor, Perhipheral and I/O Bus Interface PCBs, make up the system's vital computer, while the optional Code system Interface PCB serves as an independent controller for a non-vital serial link to GENISYS.

Application software PROMs are installed on the Peripheral PCB. This board is also equipped with the system's hardware set-up switches and seven system monitoring LEDs. The Code System Interface PCB incorporates its own microprocessor, hardware set-up switches and system monitoring LEDs. The CPU cardfile can be optionally equipped with two complete sets of these boards in a warm/standby failover configuration.

The 15-slot I/O card file contains various configurations of output and input PCBs, as determined by the application. These boards interface the microprocessor-based circuits of the CPU cardfile with external relay and signal lamp circuits.

The Standard and Voltage-Limited Relay Driver PCBs provide six dc outputs for controlling single-polarity relays. (These boards differ only in their output "on"/no-load voltage levels.) The Bi-Polar Relay Driver PCB provides three dc outputs for controlling bi-polar relays. Signal lamps are operated by 18, 25 or 36 watt versions of the DC Lamp Driver PCB, which provides four outputs. The Standard Input PCB provides eight, single-polarity dc inputs or four inputs for relay contact inputs in a bi-polar configuration. There are two versions of the Standard Input PCB, to accomodate 20 or 32 volt (max.) levels.

COPYRIGHT 1988, UNION SWITCH & SIGNAL INC.

MICROLOK Development System

The MICROLOK Development System enables the user to precisely tailor MICROLOK's application logic to the configuration of the interlocking system. The Development System consists of a personal computer for writing, testing and simulating the application logic, a PROM programmer for transferring the application program to Peripheral PCB PROMs, a PROM eraser and all required software.

The application logic is designed using a simple but highly efficient and flexible logic statement format. This allows the signal engineer to design the program in familiar relay logic terms. The Development System's simulator allows the engineer to fully test and debug the application program before it is loaded into the Peripheral PCB PROMs.

The application PROM program is loaded and retrieved using the PROM programmer. This device also performs tests on the PROM itself.

APPLICATION NOTES

Different versions of the DC Lamp Driver board enable the MICROLOK system to drive 18, 25 and 36 watt signal lamps used in color, searchlight, marker light and position light signals. A circuit is available to place a signal in the most restrictive aspect in the event of a system shutdown (outputs off). Burned-out or missing signal lamps can be detected by the system. Both hot and cold filament checks are provided. Signal repeater indications are typically received by the Standard Input PCB, while searchlight mechanisms are controlled via the Bi-Polar Relay Driver PCB.

MICROLOK can control switch machine circuits with or without external overload relays at turnouts and crossovers. The Bi-Polar Relay Driver PCB is used for switch machine control, while the Standard Input PCB receives switch machine indications.

Track occupancy relay contacts are typically interfaced through MICROLOK's standard inputs, while a direct vital serial interface can be used to connect MICROLOK to the MICROCODE-III Coded Track Circuit System. Several MICROCODE-III units can also be linked to MICROLOK in a "daisy chain" configuration to manage multiple track circuits.

MICROLOK can be linked to other MICROLOK units in a Master/Slave configuration, including a single Master unit controlling up to 16 Slave units (centralized control), or a series of Master-Slave links (distributed control). The MICROLOK/GENISYS non-vital interface permits remote management of MICROLOK from a central office or operation from a local control panel. Other configurations with direct connections to the office or local panel are also possible.

FEATURES

- Manages full range of interlocking subsystems and functions
- Low power consumption
- Plug-in boards expedite field maintenance, upgrades
- Redundant computer option
- System constantly performs self diagnostics
- Inputs and outputs cross-checked before execution
- Light-out detection, hot and cold filament check
- LED diagnsotic codes quickly pin-point faults
- I/O boards accomodate wide range of relay and lamp circuits
- Direct non-vital serial link to GENISYS
- Direct vital serial link to additional MICROLOKs or MICROCODE-III.
- Application program language oriented to the signal engineer
- Development System permits complete writing, debugging simulation and loading of application logic
- High speed EIA serial communications
- 20 mA current loop interface for low noise cable runs

HOW TO ORDER

If planning a new system using MICROLOK, consult US&S Sales before ordering any units. This will ensure development of a system with the most cost-effective and efficient use of equipment. For additional details on the programming, application and maintenance of MICROLOK, request Service Manuals SM-6400A, SM-6400B and SM-6400C.

Use the parts tabulation on the next page to order replacement equipment for present MICROLOK systems or to modify these systems.

SPECIFICATIONS

Power Inputs:	18 to 32 Vdc (24 Vdc nom.) @ 10 amp/hr. to CPU, I/O power supplies, Current Loop Adapter. 9.9 to 16.2 Vdc (12 Vdc (nom.) to relay and lamp drive circuits. Current dependent on total load.
Temp. Range:	-40°C to +70°C, non-condensing humidity
CPU Cardfile:	3 vital CPU PCBs (std.) 1 non-vital code PCB (opt.) Two PCB sets for failover.
I/O Cardfile:	Up to 15 relay drive, lamp drive and/or relay input PCBs per cardfile.
Relay Drivers:	6 outputs per Standard, and Voltage-Limited PCBs. 3 outputs per Bi-Polar PCB
Lamp Drivers:	4 outputs per PCB. 18, 25 and 36 watt options. 75 watts per PCB, max.
Lamp Out Det.	
18 W PCB:	0.63 A @ 9.9 Vdc 1.02 A @ 16.2 Vdc
25 W PCB:	0.85 A @ 9.9 Vdc 1.4 A @ 16.2 Vdc
36 W PCB:	2.08 A @ 9.9 3.39 A @ 16.2 Vdc
Relay Input:	Standard Input PCB: 8 inputs, single-polarity external circuit. 4 inputs, bi-polar external circuit. 20 and 32 Vdc (max.) input options, or 12 and 24 Vdc nominals.
Logic 0 Input:	20 Vdc: 0 to 3.65 Vdc 32 Vdc: 0 to 4.9 Vdc
Logic 1 Input:	20 Vdc: 9.6 to 20 Vdc. 32 Vdc: 13.5 to 33 Vdc
Input Resist.:	20 Vdc: 1000 ohms. 32 Vdc: 1380 ohms.
Serial Comm.:	Vital and non-vital: EIA RS423 (RS-232C compatible).
Bit Rates:	Vital: 150, 300, 600, 1200, 1800, 2400 (software select) Non-vital: 50, 75, 110, 134, 150, 300, 600, 1200, 1800, 2400, 3600, 4800, 7200, 9600 (hardware select)
Comm. Modes:	Vital: Full Duplex (std.) Non-vital: Half or full dupl.
Data Security Vital:	BCH, 24 bits, multiple transmission
Direct Interf.;	45 ft. (cable length) max. Current loop or modem required beyond.
Current Loop:	20 mA, 1000 ft. max.
Master/Slave:	16 slave units, max.
Applica. Logic:	32K bytes capacity, max.
Relay Coils:	1000 coils max. defined in application logic.
Softw. Timers:	50 msec. to 2395 min.

Partially Equipped Racks

PART NO.	DESCRIPTION
N451458-8601	- CPU card file with Processor, Peripheral, I/O Bus, Code System Interface PCBs (one each) - I/O card file with no I/O PCBs - One terminal strip - CPU and I/O Power Supplies - PN-150HD (VCOR) relay - No intra-rack I/O cables
N451458-8701	Same as N451458-8601, but with two terminal strips.
N451458-8801	Same as N451458-8601, but with no Code System PCB.
N451458-8901	Same as N451458-8601, but with two terminal strips and no Code System PCB.

Equipment Rack Assembly (cont'd)

REF.	PART NO.	DESCRIPTION
		Intra-Rack Cable Assemblies
40	N451458-6501	Standard Input
41	N451458-6601	DC Lamp Driver
42	N451458-6701	Standard Output
43	N451458-6702	Voltage Limited Output
44	N451458-6801	Bi-Polar Output
45	J793097	3 foot ribbon cable
		Internal Connector Parts
46	J718284	Keying Plug (cardfile connectors)
47	J713443	Terminal, faston
48	J709146-0113	Connector plug
49	J709234-0016	Clamp, cable assembly
50	J507357	Retainer, male screw
51	J709565	Contact pin, crimp type

Equipment Rack Assembly

REF.	PART NO.	DESCRIPTION
		General Hardware:
1	R396261	Rack frame
2	A075120	Rubber channel
3	J507349-0124	Screw, 3/8"-16 x 1-1/2", hex
4	M210285	Nut
5	M210286	Nut
6	J047672	Washer, 3/8" shakeproof lock
7	J730113	Terminal
8	J731399-0026	Terminal ring
9	J480203	Nut
10	J507261	Screw, #12-24 x 1/2" panhead
11	J047750	Washer, #12 shakeproof lock
12	M392003	Angle
13	J794009	Terminal strip assembly, tags 101 to 465
14	J794010	Terminal strip assembly, tags 501 to 865 (1)
15	J900200-0002	Bus bar (terminal strips)
16	M381333	Upper Mounting Bar
17	M381298	Clamp
18	J046089	Bolt, 5/16"-18 x 1-1/4"
19	J048195	Nut, 5/16-18, hex
20	J047502	Washer, 3/8"
21	N451376-0302	Mounting base, PN-150HD relay
		Relay and Electronic Units:
22	N322505-701	PN-150HD Relay (VCOR)
23	N451460-2301	Power Supply Panel, I/O
24	N451460-2201	Power Supply Panel, CPU (2)
25	N451082-2901	Card file, CPU (3)
26	N451082-3801	Card file, I/O (3)
27	N451460-3001	Current Loop Adapter Panel
		Plug-In Printed Circuit Boards
28	N451441-5701	Processor PCB
29	N451441-5502	Peripheral PCB
30	N451441-6001	I/O Bus Interface PCB
31	N451441-5302	Code System Interface PCB
32	N451441-6402	Standard Input PCB (20V input)
33	N451441-6403	Standard Input PCB (32V input)
34	N451441-6501	Standard Relay Driver PCB
35	N451441-6601	Bi-Polar Relay Driver PCB
36	N451441-7401	Voltage-Limited Relay Driver PCB
37	N451441-6702	DC Lamp Driver PCB (18 W lamp)
38	N451441-6703	DC Lamp Driver PCB (25 W lamp)
39	N451441-7301	DC Lamp Driver PCB (36 W lamp)

(1) Used only for large local I/O requirements
(2) Two units required for dual-CPU system
(3) Part number without PCBs

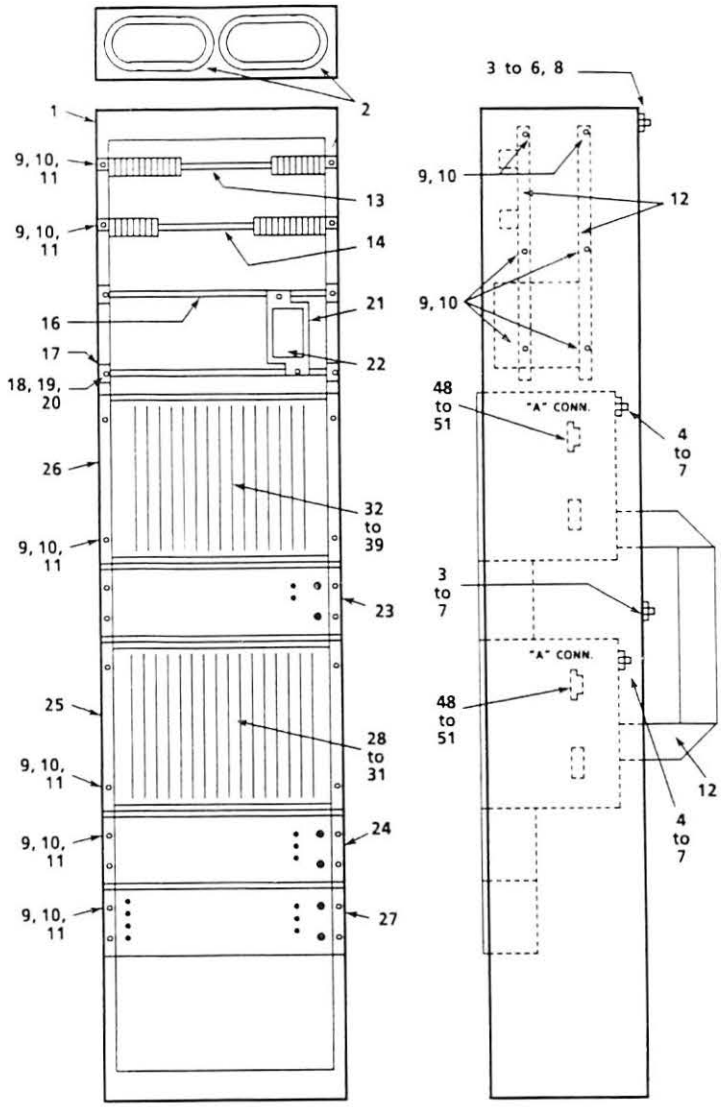

Serial Link Cable Assemblies

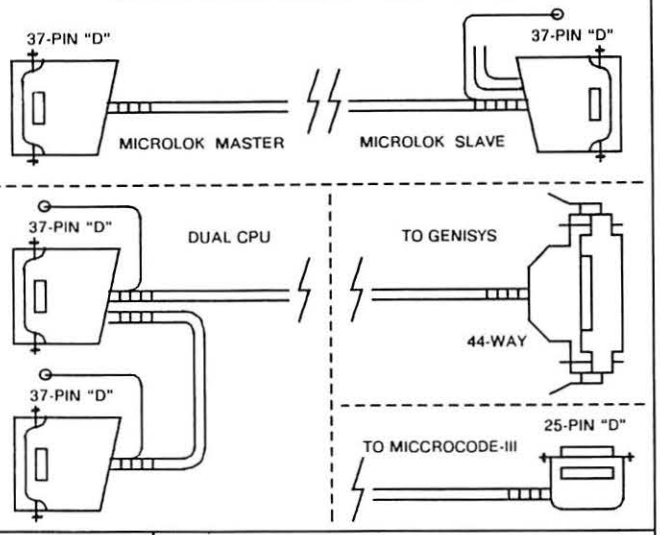

PART NO.	DESCRIPTION	
N451458-8201 N451458-8202 N451458-8203 N451458-8204	10 feet 15 feet 25 feet 35 feet	MICROLOK to MICROLOK EIA, Single CPU
N451458-8501 N451458-8502 N451458-8503 N451458-8504	10 feet 15 feet 25 feet 35 feet	MICROLOK to MICROLOK EIA, Dual CPU
N451458-8301 N451458-8001	MICROLOK Master to Modem, Single CPU (1) MICROLOK Slave to Modem, Single CPU (1)	
N451458-8401 N451458-8402 N451458-8403 N451458-8404	5 feet 10 feet 15 feet 20 feet	MICROLOK to GENISYS, Single CPU (1)
N451458-8101 N451458-8102 N451458-8103 N451458-8104	5 feet 10 feet 15 feet 20 feet	MICROLOK to MICROCODE-III, Single CPU (1)

(1) Dual-CPU versions not available for these interfaces

Misc. Installation and Maintenance Parts

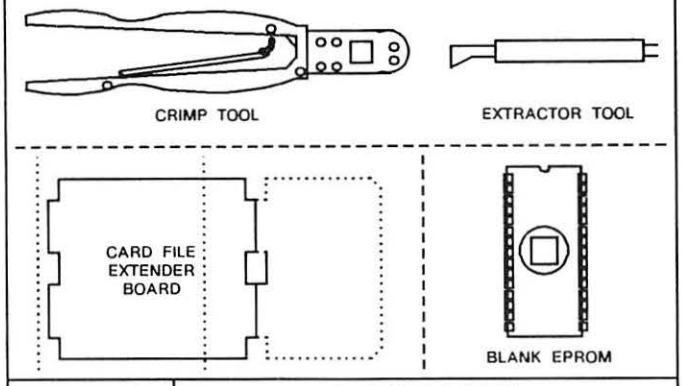

PART NO.	DESCRIPTION
J709565	Serial cable crimp pins
J396092	Crimp tool (serial cable pins)
J396088	Crimp pin extractor tool
N451441-6901	Extender board, I/O card file
N451441-5901	Extender board, CPU card file
J578054	20,000 mFd capacitor (battery noise reduction)
J709145-0138	0.15 mFd capacitor (battery and ground noise reduction)
J706892	0.10 mFd capacitor (battery and ground noise reduction)
J723912	Diode 1N4007 (relay coil snubbing)
J726150-0186	Diode, MR 756, 600 Piv (signal lamp circuit), 6A
J726150-0140	Diode, MR 824 (signal lamp circuit), 5A
J792736-0030	Transzorb 5KP16A (ground noise reduction on USSP-11)
J792736-0036	Transzorb 5KP40A (ground noise reduction on USSP-11)
J721189	Resistor, 47 ohm, 1/2 W (240 ohm relay drive)
J723065	Resistor, 1300 ohm (no-load protection for Bi-Polar Relay Driver PCB output)
J715029-0409	Application program EPROM (temperature tested)
N451552-0504	USSP-11 Secondary Surge Suppressor (18 V, 25 A, dc power input lines)
N451552-0515	USSP-11 Secondary Surge Suppressor (32 V, 15 A, dc power input lines)

MICROLOK Development System

PART NO.	DESCRIPTION
X451232-0203	IBM-Based kit: IBM PC, EPROM programmer, EPROM eraser, cable, instruction sheets, software floppy disks
X451232-0204	Compaq-based kit: Compaq PC, EPROM programmer, EPROM eraser, cable, instruction sheets, software floppy disks
N451233-0101	IBM personal computer, with operating system software and development system labeling
N451233-0201	Compaq personal computer, with operating system software and development system labeling
J703105-0003	EPROM programmer
N451458-7201	Cable, EPROM programmer to PC (IBM or Compaq)
J703105-0003	EPROM Eraser
N451232-0105	MICROLOK Development System diskette, floppy disk version
N451232-0106	MICROLOK Development System diskette, hard disk version
J703105-0004	Blank diskette
S006403	Instruction sheet, IBM PC hardware inst.
S006404	Instruction sheet, IBM PC hardware inst.
S006401	Instruction sheet, floppy software disk inst.
S006402	Instruction sheet, hard software disk inst.

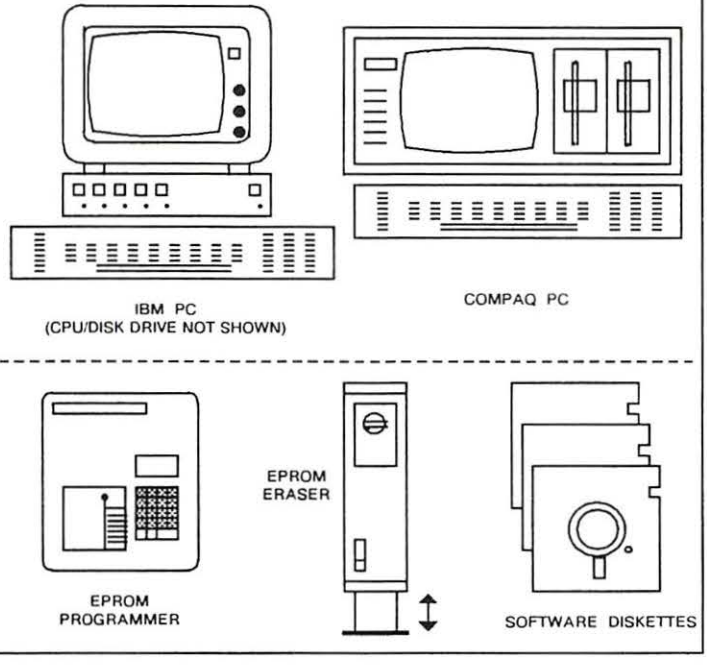

ELECTRO-PNEUMATIC CAR RETARDER MODEL 81

The Model 81 Electro-Pneumatic Car Retarder is a fast-acting operable retarder for use in classification yards and industrial applications. It is designed to handle cars of all weights, with its capability determined by the length and design of the hump. The Model 81 offers 10% more retardation than the Model 67, and it can be sectionalized for greater vesatility of control and applications.

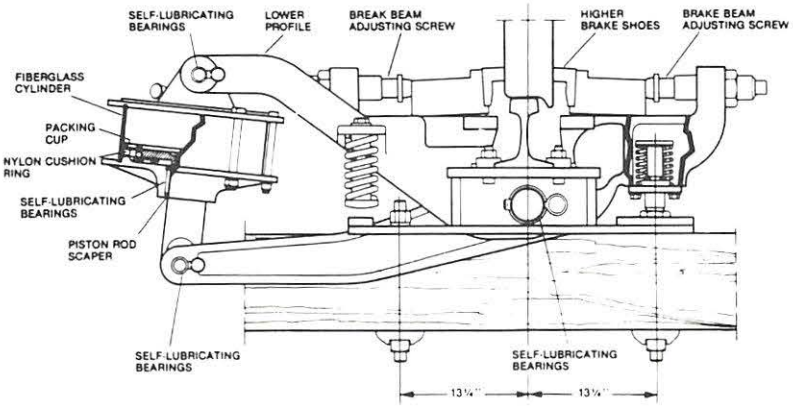

DESCRIPTION

GENERAL

The Model 81 Retarder's major components include self-contained cylinder units, control valves and brake beams. Each cylinder consists of a pneumatic cylinder, upper and lower levers, and a common fulcrum pin around which all parts rotate. This arrangement assures low internal friction in the retarder, and uniform application of pressure on both sides of the wheels, regardless of the spacing of the wheels on the axle.

The Model 81 Retarder is universal in application; that is, the same parts and assemblies may be applied to a right-hand or left-hand layout. Control valves may also be installed on the left or right. The retarder can be arranged as a single or double rail retarder of any length in 75" increments. As a single rail retarder, it may be installed on the left or right rail, with the control valve on either side of the track. The Model 81 can also be installed on a curve, and may be used as a Master or Group retarder in classification yards. Typical Model 81 installations are shown on the back of this sheet.

Control valves are arranged so that no one valve controls more than 18 cylinders. Any number of sections may be operated automatically or manually.

The cylinder units are connected by articulated brake beams and brake shoes. The brake shoes are arranged to span the joint between adjacent brake beams, thus reducing shock and wear on the brake beams and levers. Guide rails are provided at the ends of the retarder to prevent any car, which might be raised, from being derailed.

CYLINDERS

Model 81 cylinder assemblies are of tie rod construction for ease of maintenance. Top and bottom cylinder heads and piston rod are of cast construction. The replaceable cylinder body is made of fiberglass, complete with lubricant impregnated into the inside diameter. A nylon cushion ring is part of the piston assembly to prevent cylinder wall scoring. Cylinders may be disassembled in the field, enabling rebuilding of the assemblies without returning them to the shop. Cylinders are available in either 12" or 14-1/2" diameters.

OPERATING LEVERS AND BRAKE BEAMS

Operating levers and brake beams are of cast steel construction. The upper levers are 4-3/4" lower at their uppermost extremity, which provides improved clearance for rolling stock. Self-lubricating bearings throughout the assembly are designed to reduce periodic maintenance. Adjustable brake beam screws allow compensation for brake shoe wear; shimming is not used.

COMPARISON WITH PREVIOUS US&S RETARDERS

The Model 81 Retarder is not interchangeable with any of its predecessors. However, required tie spacing and mounting dimensions are the same. Also, expendable components such as brake shoes and cylinder packings are the same as used on all previous US&S retarders. The brake shoes have been raised 1/4", to provide more retardation.

Models 31, 32, 66 or 67 retarders can be gradually converted to Model 81 retarders during routine maintenance programs. This is accomplished by providing beam breaks between the Model 81 and older model retarder sections.

FEATURES

- 10% more retardation than the Model 67 retarder.
- Tie rod cylinder construction with replaceable fiberglass cylinder and nylon cushion rings for longer wear and easy rebuilding.
- Self-lubricating bearings contribute to longer service life and less maintenance.
- Cast steel construction for longer service life
- 4-3/4" lower profile and a more vertical cylinder position reduces chances of interference with rolling stock.
- Brake beam adjustment screws eliminate shimming of shoes.
- Left or right-hand component compatibility.
- Can be applied to single or double rail retarder, or on a curve.

HOW TO ORDER

Because of the numerous configurations possible with the Model 81 Retarder (per customer specifications), US&S does not provide standard ordering references for complete retarder assemblies. Contact US&S Sales to order new assemblies. Request Service Manual SM 6256 to order replacement parts for the Model 81. Standard installation and maintenance tools for the retarder are listed on the back of this sheet.

PRINTED IN USA

UNION SWITCH & SIGNAL DIVISION
AMERICAN STANDARD INC. / PITTSBURGH, PA 15237

RSE-14A4
REV. 12/86

COPYRIGHT 1986, US&S DIVISION OF AMERICAN STANDARD INC.

TYPICAL LAYOUTS FOR MODEL 81 RETARDERS

24 UNIT - DOUBLE RAIL

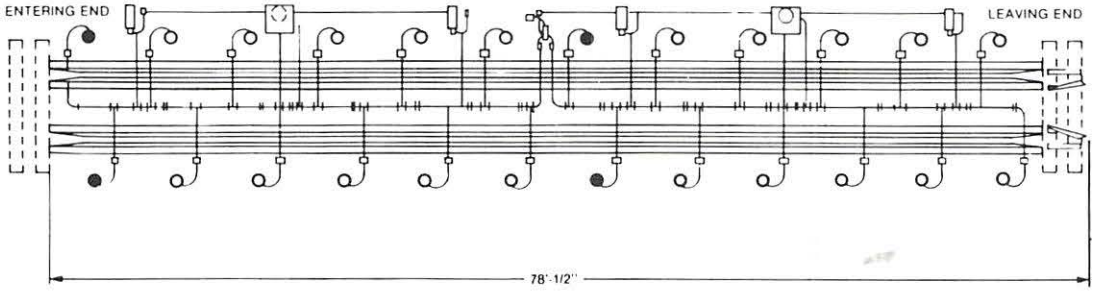

12 UNIT - SINGLE RAIL

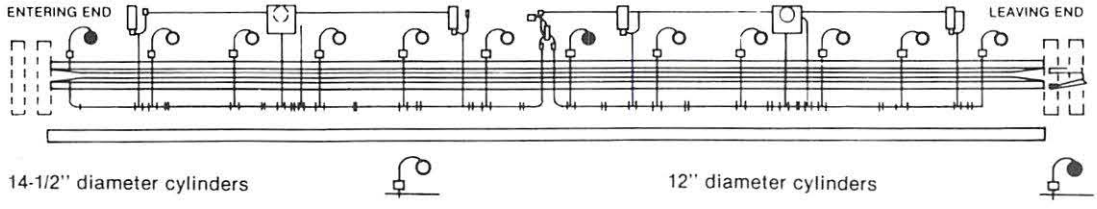

Operating air pressure should not exceed 150 PSIG.

INSTALLATION AND MAINTENANCE TOOLS

PART NO.	REF.	DESCRIPTION
M188733	A	Wrench, for brake beam adjusting screw lock nut, lower lever spring stopnut, upper lever stop spring nut.
N188823	B	Gage, brake shoe.
J039844	C	Handle, tubular #30, for box socket wrench.
J039929		Wrench, #254 heavy duty offset box socket, for tightening tap bolts of lever fulcrum retainer.
J039851	D	Wrench, Apex universal socket, Apex #KX-709-6, with socket for 1" drive on one end and 1-7/16" hex on opposite end for brake shoe nuts.
J039859		Wrench, Ingersoll-Rand reversible impact, size 534 for 1" drive.
		Wrench, Apex universal socket, Apex #KX-718-6, with socket for 1" drive on one end and 2" hex on opposite end for rail chair hold down stud nuts.
M228495		Wrench, for breaking loose and adjusting screws and brake shoe nuts.
M188734		Wrench, for lower lever spring bolt nut, brake shoe bolt nut and brake beam adjusting screw.
J039715		Wrench, 7/8" socket 975A without pin handle, for use with rachet wrench, used for rail clip bolts.
J397080		Socket, 1-1/2" hex, heavy duty impact, 1" square drive for upper lever stop spring bolt.
J397189		Socket, 1-7/16" double square with 1" square drive for brake beam adjusting screw.
J793096		Adapter, 3/4" female/1" male for use with 1-7/16" double square socket, for brake beam adjusting screw.
J562087		Handle, sliding "T" for use with adapter for 1-7/16" double square sockjet, for brake beam adjusting screw.
J776729		Pin, steeling locking, for use with 1-7/16" double square socket, for brake beam adjusting screw.
J751338		Ring, rubber locking, for use with 1-7/16" double square socket, for brake beam adjusting screw.

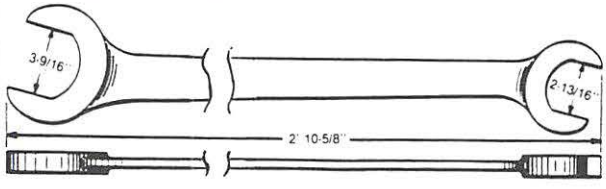

A

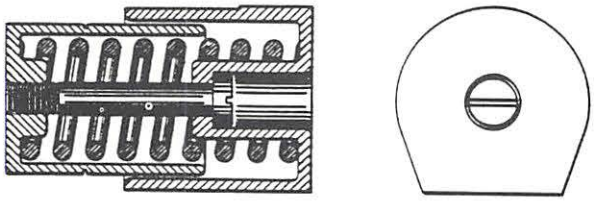

B

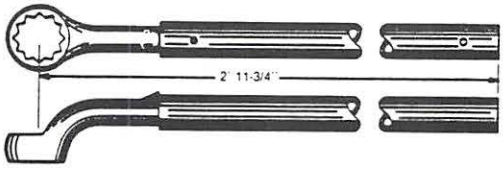

C

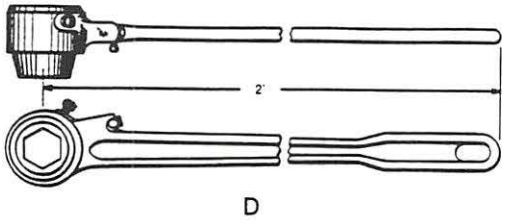

D

MISCELLANEOUS SYSTEM EQUIPMENT

CIRCUIT PROTECTION DEVICES

USG-A E-Z Vue Lightning Arresters RSE-17A1
USSP Secondary Surge Suppressors RSE-17A2

REPLACEMENT LAMPS

Lamps for Signal Light Applications RSE-17B1

SOLID STATE TIMERS

5 Second Timer RSE-17C1

MISCELLANEOUS WIRING HARDWARE

Terminal Blocks, Insulated Molded Caps, Fuses, Fuse Blocks, and Resistors RSE-17D1

MAINLINE SIGNAL ASSEMBLIES
COLOR LIGHT & MARKER LIGHT SIGNAL UNITS

Mainline Color Light Signal Assemblies, utilizing MCL-100 Series Color Light Signal units, are available to suit most standard applications. All components and masts are pre-drilled enabling quick and easy erection. Time-honored US&S quality is your assurance of a reliable and efficient mainline signal assembly that will provide years of trouble-free operation.

For Mainline Colorlight Signal Assemblies utilizing US&S'S H-2 Searchlight Units, and MCL-101 Marker Light units, refer to catalog section RSE-2B1.

INTRODUCTION

The standard color light signals and marker lights shown in this catalog section have been arranged to provide maximum ease and flexibility in ordering. A basic signal is comprised of: (1) an aluminum or steel mast and ladder assembly; (2) signal units; and (3) installation material.

Because of the many possible combinations, the signal light units are listed in separate catalog sections for quick and easy reference and ordering. Included in these sections are optional items, hoods, backgrounds, and material required to mount and install the specific light unit. The mast and ladder required for a specific installation is covered in this catalog section.

MAST AND LADDER ASSEMBLY

Mast and ladder assemblies are available in both aluminum and steel combinations and sizes as described in the following paragraphs.

The aluminum masts with galvanized steel ladders are available in the 16'-5" height only. Steel mast with galvanized steel ladder combinations are available in heights of 16'-1¼", 22'-1¼" and 25'-1¼".

The 16'-1¼" and 16'-5" mast are designed for mounting one signal unit. The 22'-1¼" mast is designed for mounting two signal units, and the 25'-1¼" mast is designed for mounting three signal units.

Aluminum masts are fabricated from 6" aluminum pipe. Steel masts are fabricated from standard 5" steel pipe posts with the exception of the 25'-1¼" mast, which is a standard 5" pipe post in the upper section fitted into a 6" pipe post in the lower section. This arrangement provides added strength for the height.

The steel masts are pre-drilled to accommodate the maximum number of signal units for which the assembly is designed. When a lesser number of signal units is used, the drilled holes can be capped with a cover plate.

The aluminum or steel mast comes with a junction box base. Base mounting dimensions are shown in the illustration following.

The galvanized steel ladder assemblies consist of ladder sections, platforms, handrail, ladder stays, and if specified, foundation piers. The ladder assembly illustrated on page 6 shows three signal units with related platforms. If less than three signal units are to be supplied, a ladder stay is furnished in place of platform.

FEATURES

- Factory-fitted components make erection easy.
- Assemblies comply with AAR and state requirements.
- Many combinations available.
- Custom ordered to suit your particular requirements.

PRINTED IN USA

UNION SWITCH & SIGNAL DIVISION
AMERICAN STANDARD INC./ PITTSBURGH, PA 15237

COPYRIGHT 1986, US&S DIVISION OF AMERICAN STANDARD INC.

SIGNAL UNITS

The aluminum signal units used with the assemblies shown in this Catalog Section are US&S MCL-100 Color Light and the MCL-101 Marker light. The MCL-101 Marker Light may be used in place of any of the Color Light units for single indication units. Refer to applicable Catalog Section for detailed information on the signal light units.

MOUNTING HARDWARE AND INSTALLATION MATERIAL

Mounting hardware and installation material, e.g., mounting brackets, clamps, etc. apply to the specific signal light unit. Description and details of these items are contained in the Catalog Section for that unit. Refer to applicable Catalog Sections for detailed information on these items.

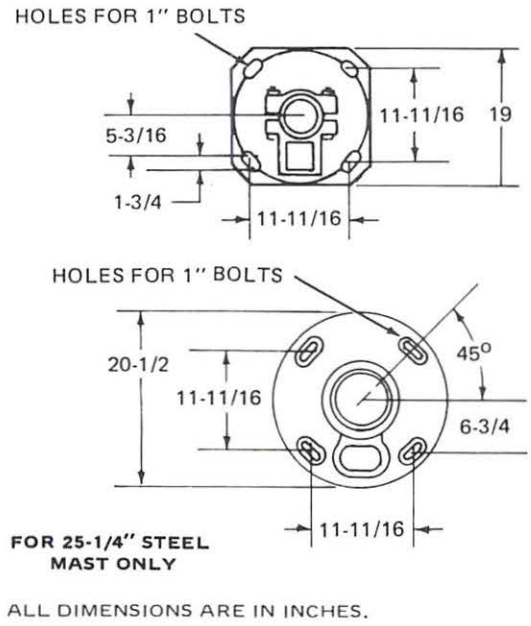

ALL DIMENSIONS ARE IN INCHES.

BASE MOUNTING DIMENSIONS

MAINLINE COLOR LIGHT SIGNAL ASSEMBLIES

ORDERING INFORMATION

The following pages illustrate the Color Light and Marker Light signal assemblies available from US&S. These assemblies are ordered by individually selecting the mast and ladder, and Color Light or Marker Light units with mounting hardware and installation material. Order as follows:

1. Determine number of signal units required.
2. Refer to illustrations following and select height of mast required. For example, if three signal light units are required, the 25'-1 1/4" mast and ladder assembly must be ordered. Aluminum masts and ladders are available in 16'-5" heights only. Steel masts and ladders are available in 16'-1 1/4", 22'-1 1/4", and 25'-1 1/4" heights.
3. Order mast and ladder assemblies from this catalog section. Quantities required for the assembly desired are shown in the tabulations following.
4. Order MCL-100 Color Light Signal units from catalog section RSE-2D2. Optional equipment and installation material are also provided in this section.
5. Order MCL-101 Marker Light Signal units from catalog section RSE-2D3. Optional equipment and installation material are also provided in this section.

NOTES: If the signal light assembly desired cannot be obtained from these standard assemblies, contact your nearest US&S Sales Representative for alternate configurations.

For ordering information on mainline Color Light signal assemblies using H-2 Searchlight Signal Units, refer to catalog section RSE-2B1.

ONE-UNIT ASSEMBLY

16'-5" ALUMINUM OR 16'-1-1/4" STEEL MAST AND LADDER ASSEMBLY

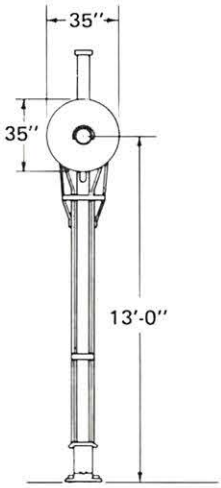

1-COLOR
SIGNAL UNIT

Aluminum

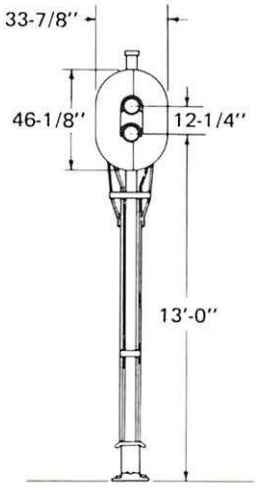

2-COLOR
SIGNAL UNIT

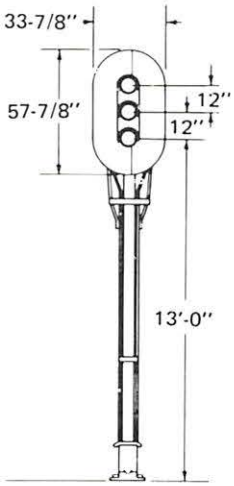

3-COLOR
SIGNAL UNIT

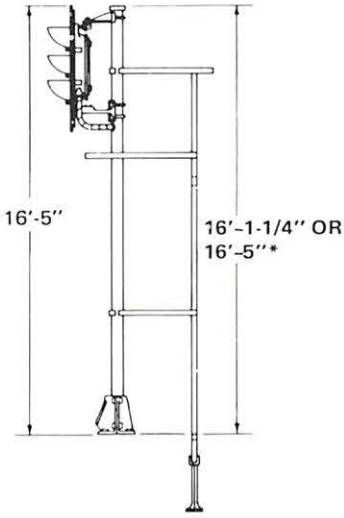

TWO-UNIT ASSEMBLY

22'-1¼" STEEL MAST AND LADDER ASSEMBLY

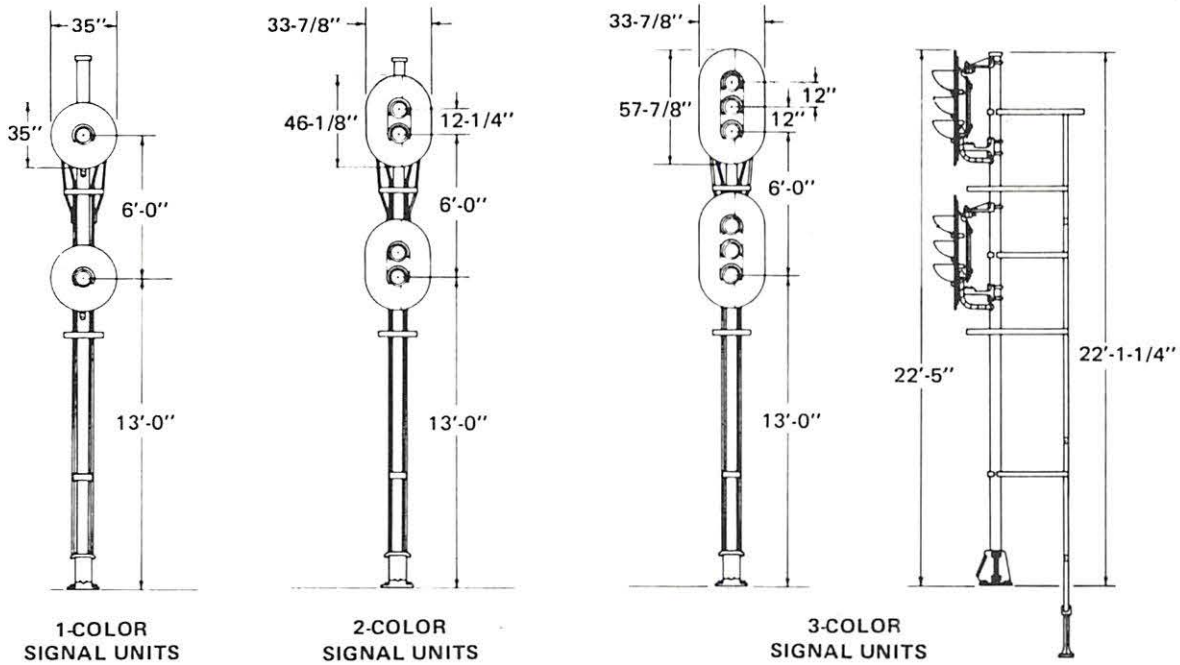

1-COLOR SIGNAL UNITS

2-COLOR SIGNAL UNITS

3-COLOR SIGNAL UNITS

THREE-UNIT ASSEMBLY

25'-1¼" STEEL MAST AND LADDER ASSEMBLY

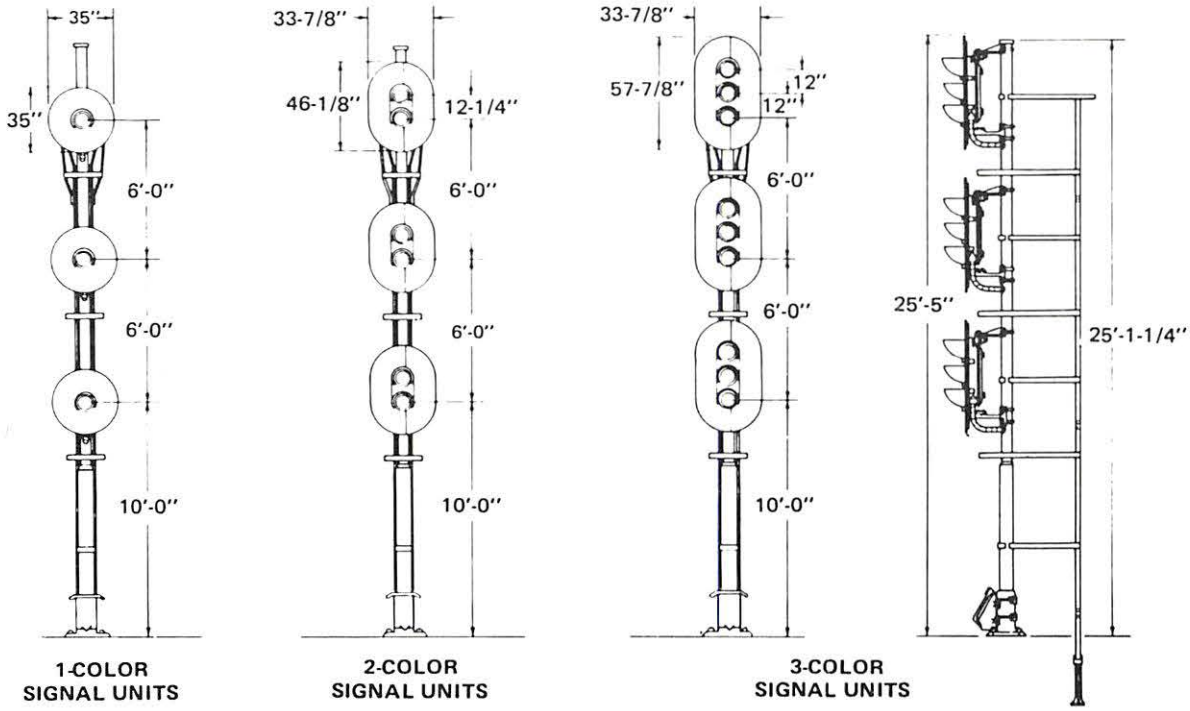

1-COLOR SIGNAL UNITS

2-COLOR SIGNAL UNITS

3-COLOR SIGNAL UNITS

TYPICAL 1-UNIT, 16'-5" SIGNAL ASSEMBLY (ALUMINUM MAST AND LADDER)

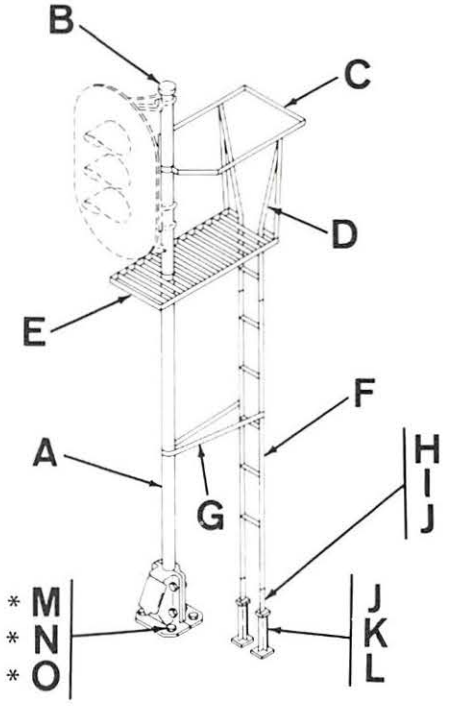

*OPTIONAL; SUPPLIED ONLY WHEN SPECIFIED IN ORDER

REF.	US&S PART NO.	DESCRIPTION	QTY.
A	N451394-1401	Mast, 6" aluminum pipe, with junction box clamp base, 24 terminal post	1
B	N437391-001	Cap, pipe	1
C	N451438-0201	Handrail, top	1
D	N377930	Brace	2
E	N303733-001	Platform	1
F	N377906	Ladder	1
G	N434461	Stay, ladder	1
H	M390482	Side, bottom section	2
I	J046552	Bolt, 1/2" x 1" square-head, cadmium plated	4
J	J480210-0105	Nut, 1/2" hex, galvanized	6
K	M062563	Pier, ladder	1
L	J466076-0120	Bolt, 1/2" x 1-1/4" square head, galvanized	2
M*	M254806	Bolt foundation, 1" x 24", galvanized	4
N*	J480210-0159	Nut, 1" hex, galvanized	4
O*	J475132-0121	Washer, 1" steel plate, galvanized	4

*Foundation hardware is optional and is only supplied if specified on the order.

TYPICAL 3-UNIT 25'-1¼" SIGNAL ASSEMBLY

(STEEL MAST AND LADDER)

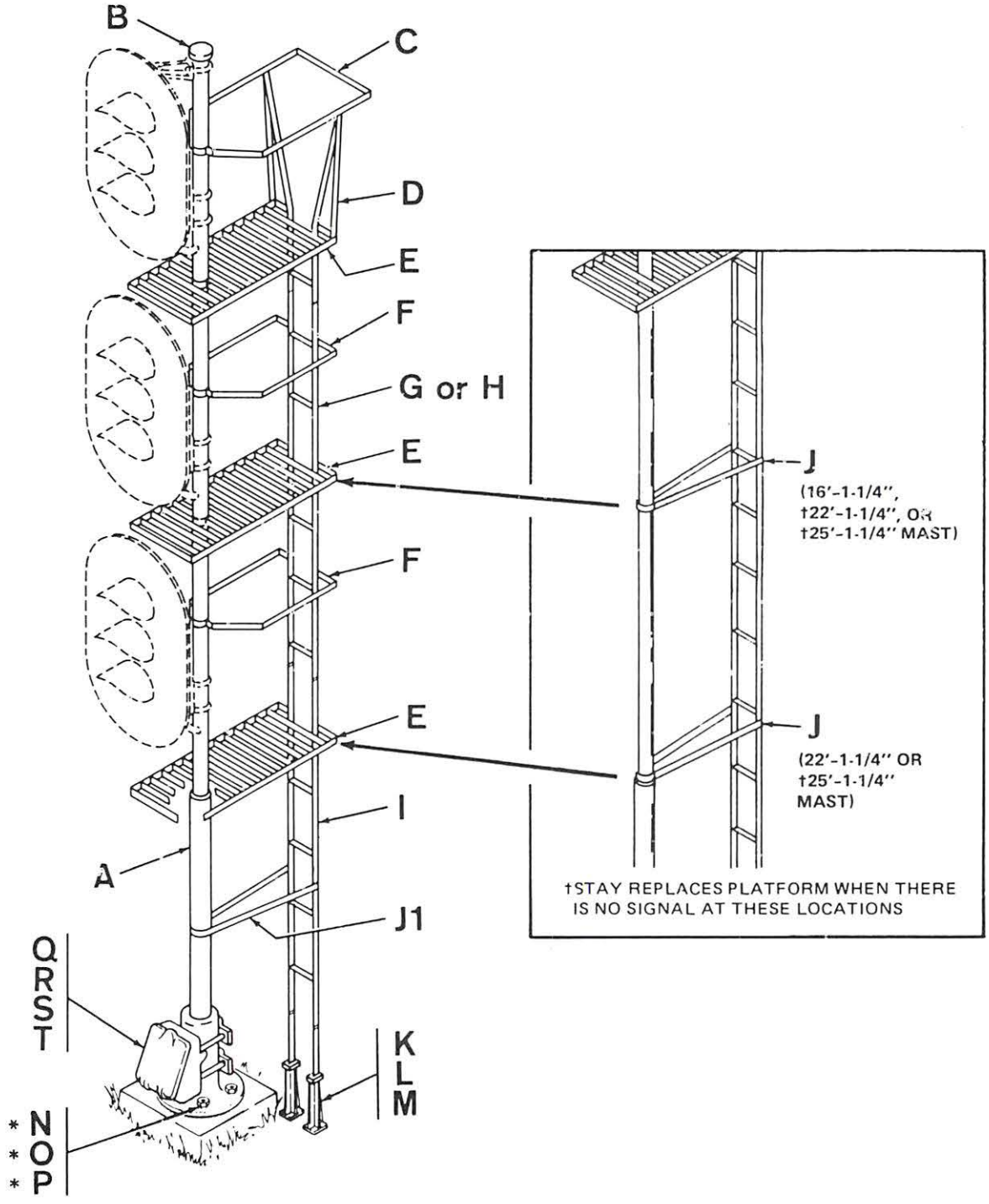

*OPTIONAL, SUPPLIED ONLY WHEN SPECIFIED.

STEEL MASTS AND LADDERS

REF.	US&S PART NO.	DESCRIPTION	16'-1 1/4" ASSY	22-1 1/4" ASSY	25'-1 1/4" ASSY
A1	N390497	Mast, 5" steel pipe,with holes for 1 signal, with junction box clamp base, 24 terminal posts	1		
A2	N390502	Mast, 5" steel pipe, with holes for 2 signals, with junction box clamp base, 24 terminal posts		1	
A3	N390549	Mast, 5" and 6" steel pipe, with holes for 3 signals with base arranged for junc. box			1
B	N377598	Cap, pipe	1	1	1
C	N390566	Handrail, top	1	1	1
D	N390576	Brace	2	2	2
E	N220676	Platform	1	2	3
F	N128467	Handrail, middle or bottom		1	2
G	N377906	Ladder, top section		1	1
H	N390483	Ladder	1		
I	N390484	Ladder, bottom section		1	
I1	N390485	Ladder, bottom section			1
J	N128591	Stay, ladder	1	1	
J1	N128592	Stay, ladder			1
K	M062563	Pier, ladder	1	1	1
L	J046816	Bolt, 1/2" x 1-1/4" square head. cad. plated	2	2	2
M	J048013	Nut, 1/2" hex, cadmium plated	2	2	2
N*	M254806	Bolt, foundation, 1" x 24"	4	4	
O*	J048030	Nut, 1" hex, zinc plated	4	4	4
P*	J047509	Washer, 1" steel plate, zinc plated	4	4	4
Q	N212958	Box, junction, 24 terminal posts (for use with item A3)			1
R	M104294	Clamp, half (for junction box)			2
S	M104873	Bolt, hook, 3/4" (for junction box)			4
T	J048026	Nut, 3/4" hex, cadmium plated (for hook bolt)			4

*Foundation hardware is optional and is supplied only if specified on the order.

NOTES: On installations where either middle or bottom signal unit (or both) is to be omitted, order cover cap N385275 (along with same U-bolt and nuts used for cable outlet) to cover unused opening in mast.

On installations where either middle or bottom signal unit (or both) is omitted, if the ladder platform is not desired at the location of the omitted signal(s), then omit platform and handrail for that location and order instead ladder stay N128591 (REF. J). Install the stay at the location of the omitted platform.

INCLINED COVER GLASS ASSEMBLY AND PHANKILL UNITS

The Inclined Cover Glass Assembly is an optional device for use in controlling beam patterns of color light, searchlight, and marker light signals.

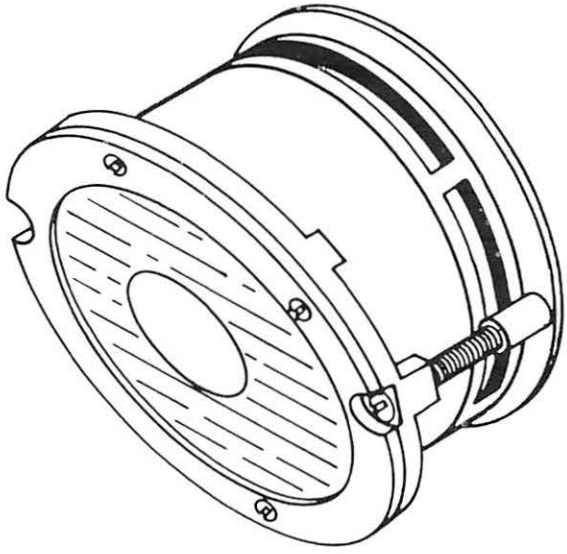

SHOWN WITH PHANKILL

A clear glass roundel provides the desired deflections and, therefore, permits application of a single assembly to signal units with a lens of any color. The basic inclined glass assembly reduces phantom effects, but a phankill unit may be incorporated for the reduction or more severe phantom effects.

DESCRIPTION

The Inclined Cover Glass Assmbly is designed for mounting on signal units containing 8-3/8" diameter lens units. It is used with MCL-100 Color Light Signals, H-2 Searchlight Signals, and MCL-101 Marker Lights.

CONSTRUCTION

The basic cover glass assembly consists of an adapter ring, clear glass roundel, and lens ring. The roundel is held in position in the adapter ring by the lens ring and three screws. A gasket between the lens ring and adapter ring provides a seal to prevent entry of water into the unit. A hole is provided in each side of the adapter ring for mounting the complete assembly to the signal unit. A gasket cemented to the rear of the adapter ring provides a water-tight seal between the inclined cover glass assembly and signal unit.

ROUNDELS

The roundels used in the Inclined Cover Glass assembly provide different deflection and diffusion patterns to accommodate the various track curvature and geographic conditions encountered. A complete assortment of roundels with different patterns are available as a separate item. Refer to Ordering Information for details.

PHANKILL UNITS

Phankill units are available for use with the inclined cover glass assembly. The phankill unit is attached with a lens ring and three mounting screws, which must be ordered separately. Refer to Ordering Information for details.

ORDERING INFORMATION

The inclined cover glass can be ordered with or without phankill. The complete assembly consists of the roundel and adapter (inclined) ring, phankill unit, when called for, lens ring (for existing installations) and mounting screws. To order, proceed as follows:

1. Select Inclined Cover Glass Assembly from Table 1. Specify if inclined cover glass is to be used with dwarf searchlight signal unit.
2. Select other items (Ref. B, C, & D in Figure 1) to complete the installation from Table 2. These items to be ordered in addition to the inclined Cover Glass.
3. Order all items by part number and description, being sure to supply separate part numbers for the phankill (when required), lens ring, and mounting screws.

PRINTED IN USA

UNION SWITCH & SIGNAL DIVISION
AMERICAN STANDARD INC./ PITTSBURGH, PA 15237

COPYRIGHT 1986, US&S DIVISION OF AMERICAN STANDARD INC

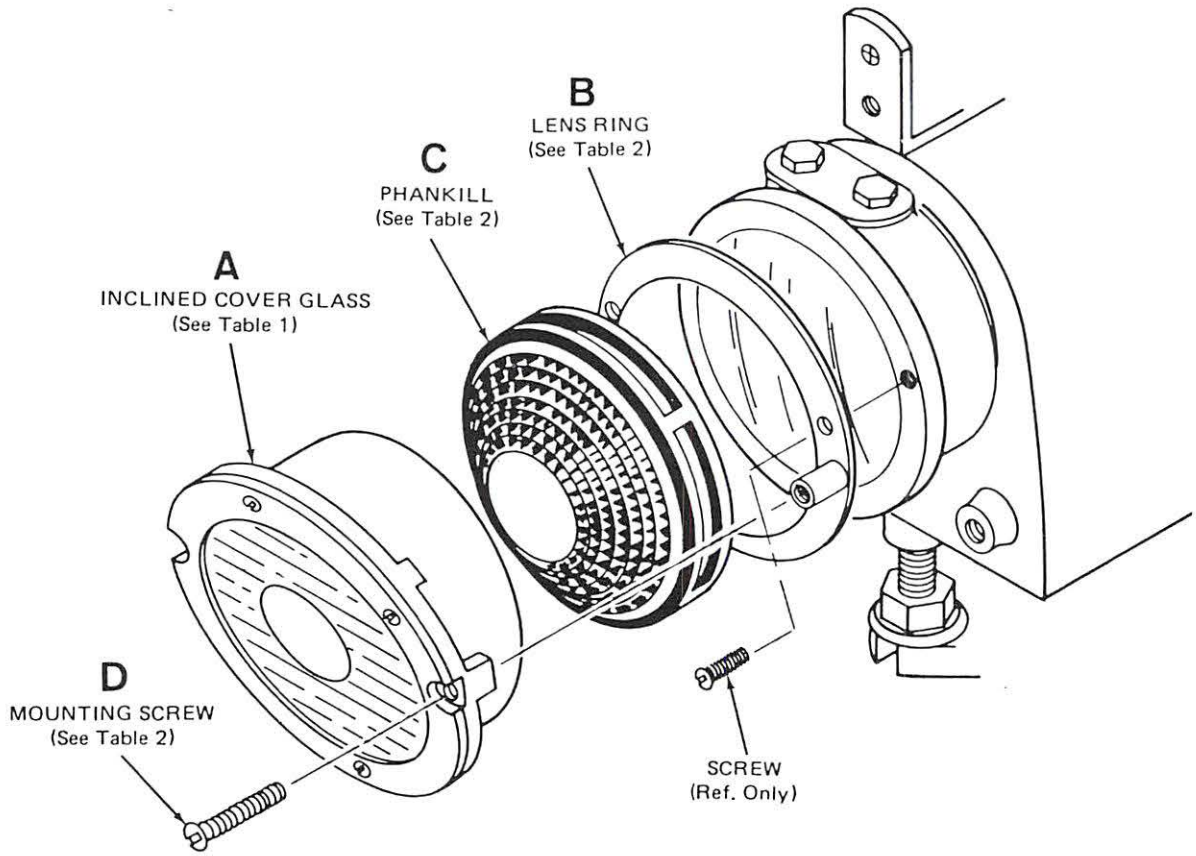

TABLE 1
INCLINED COVER GLASS, COMPLETE WITH CLEAR ROUNDEL FOR H-2 SEARCHLIGHT SIGNALS MCL-100 COLOR LIGHTS MCL-101 MARKER LIGHTS

REF.	US&S PART NO.	DESCRIPTION
A	N184403	With flat, clear roundel for 10° deflection to the left.
A1	N184404	Same as above, but with 20° deflection to the left.
A2	N184405	Same as above, but with 30° spreadlight (15° left, 15° right)
A3	N220829	With flat, plain, clear roundel
A4	N228584	With convex, clear roundel for 16° spreadlight (8° left, 8° right)
A5	N240656	With flat, clear roundel for 10° deflection up, with painted risers; assembly with prisms out for searchlight dwarf signals.
A6	N437953	With Lexan® Roundel, clear, plain, flat.
A7	N391732	Without roundel

TABLE 2

PHANKILL, LENS RING AND MOUNTING HARDWARE FOR H-2 SEARCHLIGHT and MCL-100 COLOR LIGHT SIGNALS

	APPLICATION TO SIGNALS	LENS RING (REF. B)	PHANKILL (REF. C)	SCREW (REF. D)
INCLINED COVER GLASS	New	–	–	M451358-1928 (2 required)
	Existing	N260573	–	M451358-1928 (2 required) M451358-0606 (3 required)
INCLINED COVER GLASS WITH PHANKILL UNIT	New	–	N143504	M451358-1944 (2 required)
	Existing	N260573	N143504	M451358-1944 (2 required) M451358-0606 (3 required)
INCLINED COVER GLASS WITH PHANKILL UNIT*	Existing	N260573	N143504	M451358-1944 (2 required) M451358-0606 (3 required)
INCLINED COVER GLASS ADAPTER WITH STENCIL**	New	–	–	M451358-1928 (2 required)
	Existing	N260573	–	M451358-1928 (2 required) M451358-0606 (3 required)

FOR DWARF SEARCHLIGHT SIGNALS PHANKILL UNIT

PHANKILL UNIT	New	–	N255913	M441358-1944 (2 required)
	Existing	N260573	N255913	M441358-1944 (2 required) M441358-0606 (3 required)

*For use with lens J053738 (H-2 Searchlight Signal Only).
**Select references for proper stencil.

PHANKILL, LENS RING, AND MOUNTING HARDWARE FOR MCL-101 MARKER LIGHT SIGNALS

INCLINED COVER GLASS

	APPLICATION TO SIGNALS	LENS RING (REF. B)	PHANKILL (REF. C)	SCREW (REF. D)
INCLINED COVER GLASS	New	–	–	M451358-1928 (2 required)
	Existing	N260575	–	M451358-1928 (2 required) J051686 (3 required)
INCLINED COVER GLASS WITH PHANKILL UNIT	New	–	N143504	M451358-1944 (2 required)
	Existing	N260575	N143504	M451358-1944 (2 required) J051686 (3 required)
INCLINED COVER GLASS ADAPTER WITH STENCIL*	New	–	–	M451358-1928 (2 required)
	Existing	N260575	–	M451358-1928 (2 required) J051686 (3 required)

*Select references for proper stencil.

ROUNDELS

ORDERING INFORMATION

Roundels may be ordered separately. Standard roundels available are listed below. Determine by description the type roundel desired and order by part number and description in caps.

PART NO.	DESCRIPTION
N222600	ROUNDEL, clear, flat for 10° deflection to left.
N199883	ROUNDEL, clear, flat, for 20° deflection to left.
N216441	ROUNDEL, clear, flat, for 30° spreadlight (15° left, 15° right(.
N249111	ROUNDEL, clear, flat, plain
N182209	ROUNDEL, clear, convex, for 16° spreadlight (8° left, 8° right(.
N178328	ROUNDEL, clear, convex, diffusing Type E
N256211	ROUNDEL, clear, flat, for 10° deflection up (painted risers).
N269577	ROUNDEL, clear, flat, for 10° deflection left, 10° deflection down.
N269719	ROUNDEL, clear, flat, for 10° defelction right, 10° deflection down.
N317811	ROUNDEL, clear, flat, for 30° deflection left.
N437954	ROUNDEL, LEXAN, clear, flat, plain.

U-5 SWITCH CIRCUIT CONTROLLER

The U-5 Switch Circuit Controller is a ruggedly constructed unit used for electrically detecting the position of rail switch points. It is available in either four or six way sizes for 2-position, 3-position and polarized applications.

DESCRIPTION

The U-5 terminals, contacts, operating cams and other components are installed in a rugged and weather-tight steel housing. A hinged cover provides easy internal access for inspection, adjustments and maintenance. Two elbow type ventilators provide air circulation and minimize condensation within the housing. The 1-1/2" shaft provides a large bearing surface, reduced bushing wear, and a large surface area to engage a micrometer adjusting screw (preventing wear and loss in sensitivity. Shaft bearings are bronze with pressure grease fittings.

APPLICATIONS

A 2-position controller may be used without change of parts for polarized applications by proper cam and circuit adjustments. A 2-position controller may also be used as a 3-position controller for two circuits by using two cam spaces for each 3-position circuit and making the proper cam adjustments. A 3-position controller for four circuits is obtained by substituting combined 3-position cams in place of a 2-position cam and the substitution of the cam shaft.

ORDERING

1. **Determine application and requirements of the controller, i.e. use (standard application or classification yard), contact arrangement, cam arrangement. Refer to tabulations on the back of this sheet.**
2. **Determine crank offset required. Two offsets are available: 3/4" and 2-13/32". Consider tie location to determine which crank offset is to be ordered. See application drawings at the right.**
3. **Using the tabulations, order corresponding part number for the U-5 Switch Circuit Controller that meets your requirements.**

OPERATING RODS AND POINT DETECTOR LUGS

Refer to catalog sections RSE-3E1 or RSE-3E2 for ordering information on operating rods and point detector lugs. When ordering the detector lugs, determine the "Z" dimension, as shown at the right.

FEATURES

- Quick adjustment of individual contacts.
- Positively-driven contacts (both directions)
- Rugged construction for long life, minimum maintenance
- Parts easily accessible for inspection and replacement
- Quick-responding contacts to point movement - asssures complete contact spring operation well within applicable AAR specifications.

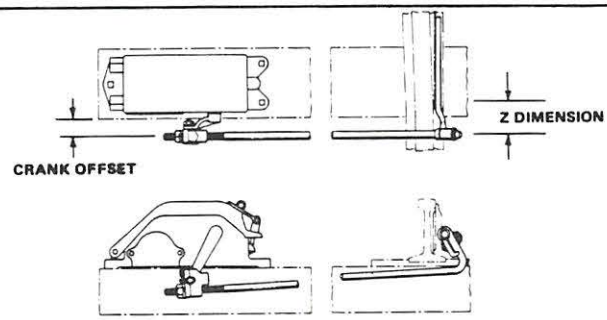

APPLICATION OF SWITCH CIRCUIT CONTROLLER TO NEAR SWITCH POINT

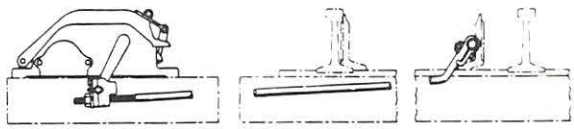

APPLICATION OF SWITCH CIRCUIT CONTROLLER TO FAR SWITCH POINT

WEIGHTS: 4-WAY CONTROLLER, INCLUDING CRANK = 68 LBS. (APPROX.)

6WAY CONTROLLER, INCLUDING CRANK = 87 LBS (APPROX.)

PRINTED IN USA

UNION SWITCH & SIGNAL DIVISION
AMERICAN STANDARD INC. / PITTSBURGH, PA 15237

RSE-3D1
REV. 6/86

COPYRIGHT 1986, US&S DIVISION OF AMERICAN STANDARD INC.

U-5 SWITCH CIRCUIT CONTROLLER FOR STANDARD APPLICATIONS

(With two wire guide plates - One blank and one with 1-1/2" tapped hole)

FOUR-WAY (4F-4B DEPENDENT CONTACTS)

US&S PART NO.	CAM	RETURN SPRING	CRANK OFFSET (SEE FRONT OF SHEET)			
			3/4" OFFSET		2-13/32" OFFSET	
			INSULATED BALL STUD	NON-INSULATED BALL STUD	INSULATED BALL STUD	NON-INSULATED BALL STUD
X184136	4-2 Pos.	Without	With			
X253925	4-2 Pos.	Without		With		
X190700	4-2 Pos.	Without			With	
X244167	4-2 Pos.	Without				With
X218085	4-2 Pos.	With	With			
X199187	4-2 Pos.	With		With		
X229482	4-2 Pos.	With			With	
X257184	4-2 Pos.	With				With
X209313	2-2 Pos. 2-3 Pos.	Without	With			
X207228	2-2 Pos. 2-3 Pos.	Without		With		
X253786	2-2 Pos. 2-3 Pos.	Without			With	
X262424	2-2 Pos. 2-3 Pos.	With	With			
X236956	2-2 Pos. 2-3 Pos.	With		With		
X191911	2-2 Pos. 2-3 Pos.	With			With	
X194433	2-2 Pos. 2-3 Pos.	With				With
X184035	4-3 Pos.	Without	With			
X190702	4-3 Pos.	Without			With	
X196648	4-3 Pos.	Without				With
N223613	4-3 Pos.	With				With

U-5 SWITCH CIRCUIT CONTROLLER FOR CLASSIFICATION YARDS

(With two wire guide plates - One with 2" tapped hole and one with 1-1/2" tapped hole)

FOUR-WAY (4F-4B DEPENDENT CONTACTS)

US&S PART NO.	CAM	RETURN SPRING	CRANK OFFSET (SEE FRONT OF SHEET)			
			3/4" OFFSET		2-13/32" OFFSET	
			INSULATED BALL STUD	NON-INSULATED BALL STUD	INSULATED BALL STUD	NON-INSULATED BALL STUD
X371946	3-3 Pos. 1-2 Pos.	Without	With			

SL-21A ELECTRIC SWITCH LOCK

The SL-21A Electric Switch Lock is a lock mechanism for application directly to hand-throw levers of switch stands. Its function is to prevent the unauthorized operation of the hand-throw lever until an electrical circuit has been established to provide an unlock safely. The mechanism is housed in a low profile cast iron case, and utilizes a foot-latch with padlock for added safety.

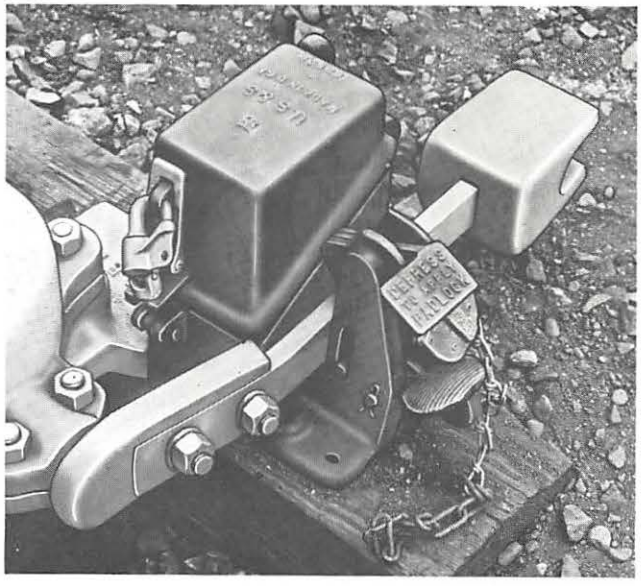

DESCRIPTION

The SL-21A is designed for right-hand assembly. Key releases are available with Yale key or Switchman's Key. Other optional items include the lock rod and lock rod support. The lock rod can be provided in the specific dimensions required by the customer. Basic components of the SL-21A include the magnet coil (of various resistance), armature, cam-operated contacts, locking dog assembly with two counterweights, and the foot latch assembly.

OPERATION

In the normal position, the foot-latch is depressed and the padlock in place. When the padlock is removed, the coil return spring raises the foot-latch, applying voltage to the lock circuit and the armature is energized. This results in the locking dog being lifted from the notch, releasing the mechanism, and allowing the switch to be thrown. The spring-loaded foot-latch must be depressed in order to insert the padlock. This action removes the voltage, the armature falls away, and with the assistance of the counter-weights, the locking dog drops back into place securing the mechanism.

Normal arrangement of the cam-operated contacts are for the padlocked position. The back contacts are closed, the front contact open in this position. There are usually 1 front and 2 back contacts. The armature normally has 2 back contacts. These are closed when deenergized.

PHYSICAL ARRANGEMENT

Overall and mounting dimensions of the switch lock are shown on the reverse side. These dimension will be found useful for locating and/or applying a switch lock to a switch layout.

If requirements call for a left-hand assembly, US&S engineers should be consulted prior to placing an order.

OPTIONAL EQUIPMENT

Locks may be ordered to include the Yale Drawer Lock. Other optional items such as the Yale Key release and Lock Rod Support are available under special order. If a lock suitable for tandem application (for locking hand-throw lever in both normal and reverse position) is desired, the order should so state.

FEATURES

- Wide range of application.
- Positive locking.
- Ease of installation and maintenance.
- Low profile.
- Meets applicable AAR requirements.

PRINTED IN USA

UNION SWITCH & SIGNAL DIVISION
AMERICAN STANDARD INC./ PITTSBURGH, PA 15237

COPYRIGHT 1986, US&S DIVISION OF AMERICAN STANDARD INC.

RSE-3D4
REV. 6/86

SL-21A ELECTRIC SWITCH MACHINE LOCK
(Right Hand Assembly)
ORDERING INFORMATION

Order the SL-21A Electric Switch Machine Lock from the tabulation below. Specify if wire inlet plate assembly is to be installed on the hasp or hinge side. Order should specify the type of switch stand on which the lock is to be applied.

US&S PART NO.	DESCRIPTION
N241331	SL-21A Electric Switch Machine Lock, with 670 ohm magnet coil, normal contact arrangement.
N272885	SL-21A Electric Switch Machine Lock, with 280 ohm magnet coil, lubrication fittings.
N256453	SL-21A Electric Switch Machine Lock, with 670 ohm magnet coil, normal contact arrangement, Yale key release and Yale drawer lock.

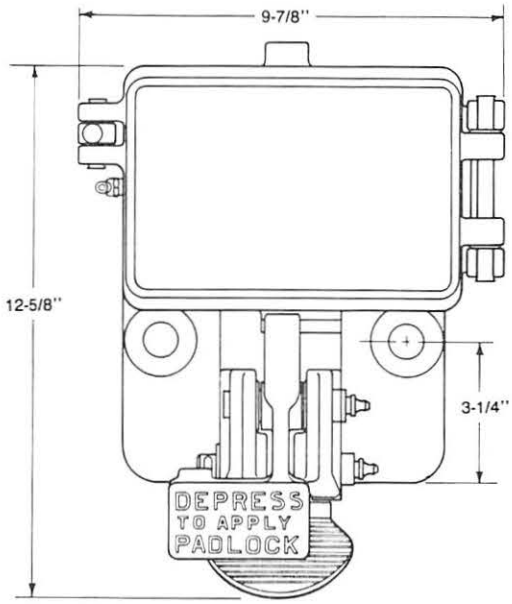

LEVER LOCK ROD
AND
LEVER LOCK ROD SUPPORT

When ordering the lever lock rod for the SL-21A , specify the length (X) and offset (Y) as shown in the diagram below. The tabulation below lists the hardware required to mount the lock rod on the SL-21A. For alternate mounting options, contact the nearest US&S Sales Office.

REF.	DESCRIPTION	US&S PART NO.
A	Lever Lock Rod	*
B	L.R. Support:	
	Stud (Qty = 1)	M015987
	Nut (Qty = 1)	J048090
	Cotter (Qty = 1)	J048622
	Washer (Qty = 1)	J047783
	Fitting (Qty = 1)	J039137

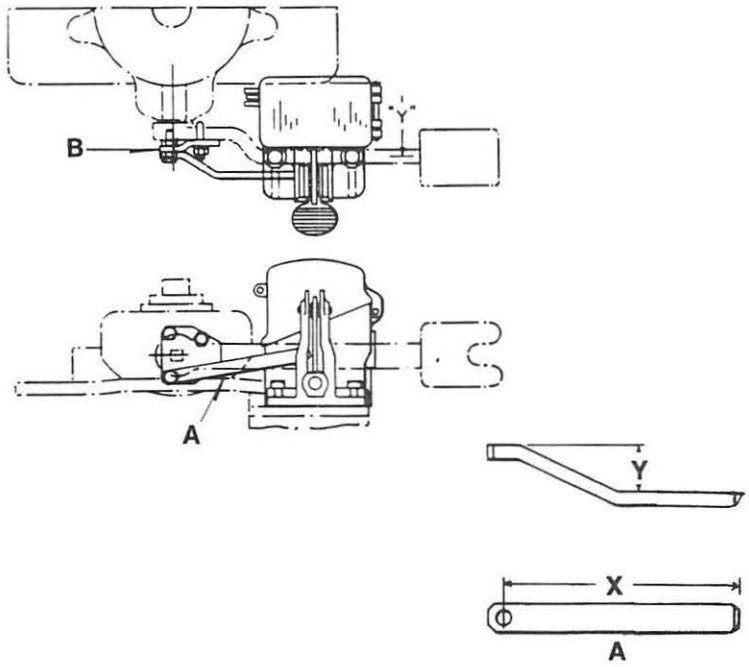

*No standard part number; order part by name and dimensions only.

POINT DETECTOR BARS AND LOCK RODS
FOR M-3, M-23A, AND M-23B SWITCH MACHINES

US&S offers a full line of rugged point detector bars and lock rods with connecting rods for use with M-3/M-23A/M-23B Switch Machines.

POINT DETECTOR BARS

Point Detector Bars are constructed of rugged, high-strength steel, available in two configurations, each designed to suit a particular companion point detector connecting rod. Each point detector connecting rod is equipped with a standard clamp designed for mating with a ball end type point detector lug or stud.

POINT DETECTOR BARS

A

PART NO.	DESCRIPTION
N284475	POINT DETECTOR BAR for M-3, M-23A and M-23B switch machines.

B

PART NO.	DESCRIPTION
N285907	POINT DETECTOR BAR for M-3, M-23A, and M-23B switch machines.

CONNECTING RODS

References below are typical for use with machines 45" from gage. Rods to other lengths and sets are available.

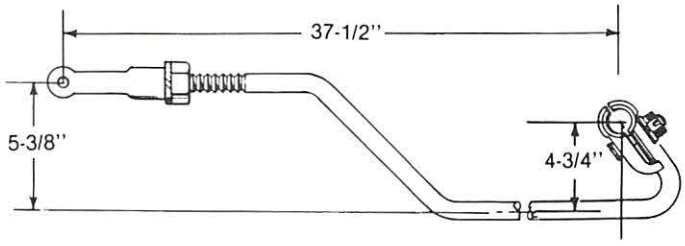

PART NO.	DESCRIPTION
N298719	POINT DETECTOR CONNECTING ROD for use with Point Detector Bar, Ref. A.
M000327	PIN, 5/8" x 1-15/16" (attaches rod to point detector bar)
J047505	WASHER, 5/8" plate (used with above pin)
J048632	COTTER, 3/16" x 1-1/8" (used with above pin)

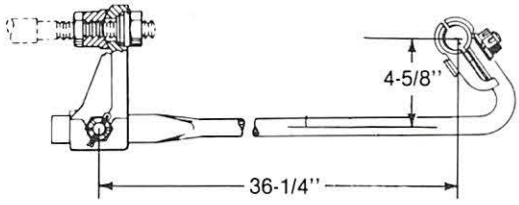

PART NO.	DESCRIPTION
N296653	POINT DETECTOR CONNECTING ROD, for use with Point Detector Bar, Ref. B.

PRINTED IN USA

UNION SWITCH & SIGNAL DIVISION
AMERICAN STANDARD INC./ PITTSBURGH, PA 15237

COPYRIGHT 1986, US&S DIVISION OF AMERICAN STANDARD INC.

LOCK RODS

Lock Rods are available in two configurations, each constructed of sturdy steel, and designed to provide long, trouble-free service. Each lock rod is equipped with adjustable notch spacing to insure compatibility with virtually any switch machine installation.

Lock rod connecting rod lengths are for a nominal dimension of 45" from gage to center of machine. Lock rod connecting rods for distances from gage other than 45" are available. For information, consult your nearest US&S representative.

C

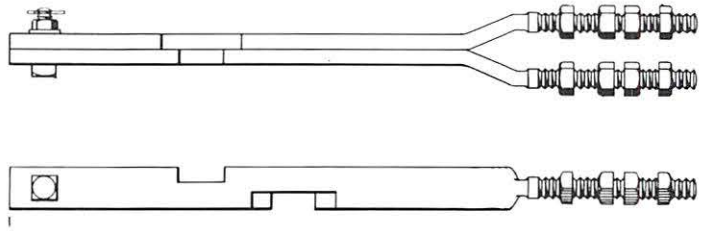

PART NO.	DESCRIPTION
N149866	LOCK ROD for use with M-3, M-23A and M-23B switch machines.

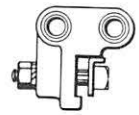

PART NO.	DESCRIPTION
N123471	LUG, for use with Part No. N149866, Ref. C.

D

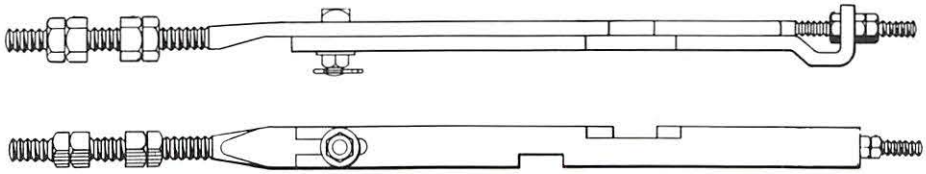

PART NO.	DESCRIPTION
N258643	LOCK ROD, for use with M-3, and M-23B switch machines.

LOCK ROD CONNECTING RODS

References below are typical for use with machines 45" from gage. Rods to other lengths and sets are available.

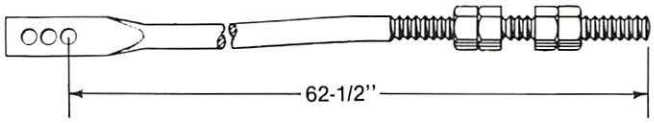

PART NO.	DESCRIPTION
N332195	LOCK ROD CONNECTING ROD for use with Part No. N1498666, Ref. C.

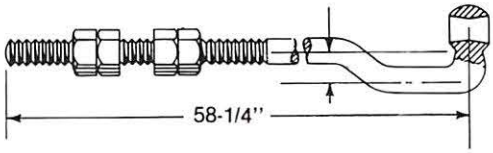

PART NO.	DESCRIPTION
N258686	LOCK ROD CONNECTING ROD for use with Part No. N258643, Ref. D.

RELAYS, PLUG-IN

GENERAL

General Information for Plug-In Relays RSE-4

VITAL PLUG-IN DC LINE RELAYS

Biased RSE-4A1
Neutral RSE-4A2
Slow Dropaway and/or Pickup RSE-4A3
Magnetic Stick RSE-4A4
Magnetic Blowout RSE-4A5

VITAL PLUG-IN DC TRACK RELAYS

Biased-Ordinary-High Dropaway RSE-4B1

VITAL PLUG-IN TRACK, LINE AND POWER RELAYS

Two Element AC Vane RSE-4C1

VITAL PLUG-IN SWITCH CONTROL RELAYS

DC Type RSE-4D1
AC Type RSE-4D2

VITAL PLUG-IN CODE RELAYS

Code Generating RSE-4E1
Decoding RSE-4E2
Code Following RSE-4E3

PLUG-IN CONTROL RELAYS

Flasher RSE-4F1
Time Element (Thermal) RSE-4F2
Light Out RSE-4F3
Power Off RSE-4F4
Time Element (Mechanical) RSE-4F5
Time Element (Electronic) RSE-4F6

RELAY MOUNTING BASES

PN-150 and PN-250 Bases RSE-4G1

(Refer to Catalog Section RSE-15 for Cab Signal Relays)

CROSS REFERENCE INDEX

US&S plug-in relays are alphabetically listed below by type and designation. The relay description and catalog section in which the relay appears are shown opposite the relay designation.

RELAY	DESCRIPTION	CATALOG SECTION
PA-150SO	Switch Control - DC Type	RSE-4D2
PC-250B*	Code Following	RSE-4E3
PC-250BAE*	Code Following - High Efficiency	RSE-4E3
PC-250BE*	Code Following - High Efficiency	RSE-4E3
PC-250P*	Code Following - Magnetic Stick	RSE-4E3
PC-250TR*	Code Generating	RSE-4E1
PF-256*	Flasher, DC	RSE-4F1
PN-150B	Line, Biased DC	RSE-4A1
PN-150BC	Code Following	RSE-4E3
PN-150BD	Line, Biased DC	RSE-4A1
PN-150BE	Code Following	RSE-4E3
PN-150BH	Track - High Dropaway	RSE-4B1
PN-150BL	Light-Out	RSE-4F3
PN-150BM	Switch Control	RSE-4A5
PN-150BQS	Track, Biased DC -Quick Shunting	RSE-4B1
PN-150BSR	Line - Slow Dropaway	RSE-4A3
PN-150BTR	Track, Biased DC	RSE-4B1
PN-150HD	Line, DC	RSE-4A1
PN-150N	Line, Neutral DC	RSE-4A2
PN-150NE	Code Following	RSE-4E3
PN-150P	Power Off	RSE-4F4
PN-150SO	Switch Control, DC	RSE-4D1
PN-152SO	Switch Control, DC	RSE-4D1
PN-150T	Time Element (Electronic)	RSE-4F6
PN-250B	Line, Biased DC	RSE-4A1
PN-250BE	Code Following	RSE-4E3
PN-258B	Line, Slow Pickup	RSE-4A3
PN-258BC	Decoding, Biased DC	RSE-4E2
PN-258BSR	Line, Slow Dropaway and Pickup	RSE-4A3
PN-259BSR	Line, Slow Dropaway	RSE-4A3
PN-259SRA	Line, Slow Dropaway	RSE-4A3
PP-151	Line, Magnetic Stick	RSE-4A4
PT-150	Time Element (Thermal)	RSE-4F2
PT-55	Time Element (Mechanical)	RSE-4F5
PV-250	AC Vane	RSE-4C1

*This relay is considered vital, except for the contact material. The application of these relays preclude the necessity for non-welding contacts.

GENERAL INFORMATION FOR PLUG-IN RELAYS

NOTICE

Plug-In Replacements for Shelf Type Relays

For Plug-In Relay replacements for shelf type relays, contact your Union Switch & Signal Sales Representative. He can quickly provide you with information on plug-in replay replacements for existing shelf relays.

US&S offers a complete line of plug-in relays for railway signaling applications. The relays covered in the following sections are standard relays which may be applied to most standard situations. This catalog section covers specifications and features common to all Vital Plug-In Relays and Ordering Information for:

- *Shelf Mounting Brackets.*
- *Shelf Mounting Frames.*
- *Contact Springs.*
- *Test Plugs.*
- *Wire Crimping Tools.*

For detailed information on plug-in relays, consult the following catalog sections.

For details on mounting bases for plug-in relays, refer to RSE-4G1.

As of 1982, new mounting bases are available having new part numbers. The cross reference substitution table in RSE-4G1 will aid in ordering replacement mounting bases when the old part number is known.

US&S also manufactures special duty relays not listed in these sections. For more information on these special relays or for a relay of your specifications, consult your nearest US&S representative.

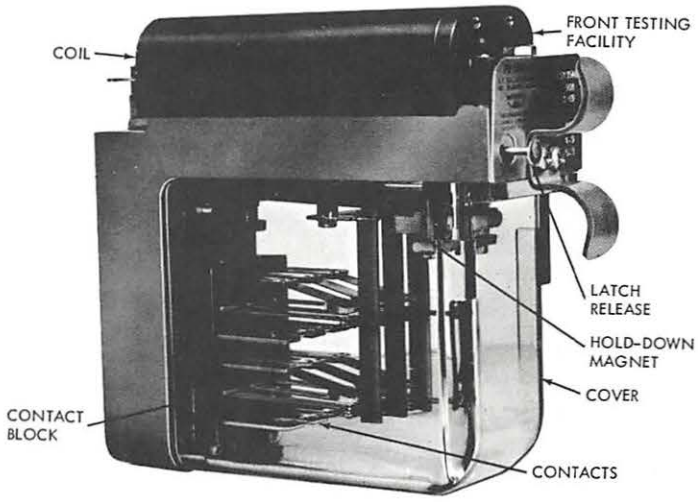

TYPE	HEIGHT	WIDTH	DEPTH
PN-150	7-1/16"	2-7/16"	8-7/32"
PN-250	7-1/16"	4-15/16"	8-3/8"

TYPICAL PLUG-IN RELAY

FEATURES

- Meets applicable AAR requirements.
- All current carrying parts are insulated to withstand a 3000-volt ground test.
- Factory calibrated for application across a wide environmental range. Operating temperature range -40°F to +185°F.
- Moving parts are protected by a sturdy, transparent dust and moisture resistance cover.
- Relay pulls out or plugs in horizontally.
- Relay locks securely in plug-in position.
- Plug connections are protected from dust, moisture, and mechanical damage.
- All relays have indexing pins to ensure insertion of the proper relay.

COPYRIGHT 1986, US&S DIVISION OF AMERICAN STANDARD INC.

DESCRIPTION

US&S plug-in relays have been developed to serve a multitude of signal circuit applications. These diversified relays combine the advantages of space saving, ease of mounting and replacement without disturbing coil or contact wiring.

US&S plug-in relays are factory calibrated, adaptable to any existing signaling system, and are available for immediate application to any signal installation.

COILS

Coils are manufactured under rigid quality and reliability controls and are encapsulated for protection against mechanical injury and the entrance of moisture.

MAGNETIC CIRCUIT

Magnetic circuits are constructed of nonaging material. The magnetic air gap is not disturbed when the coil is removed or contact springs adjusted. Relays with an adjustable magnetic shunt may be adjusted for degree of magnetic hold-down force without changing the contact adjustment or the hold-down polepiece position.

CONTACTS

Contact fingers and springs are simply constructed and heat-treated to assure uniformity of material and contact stability. The heavy contact fingers extend through the base to serve as plug connectors. Heel contacts are actuated by operating arms pivoted to the armature. Contact surfaces have sufficient wiping action to be self-cleaning.

The contact material and capability designated by symbol in the tabulations are as follows:

Std.- Fine silver heel contact with silver-impregnated carbon front contact and fine silver back contact. These contacts have a capacity of 4 amperes at 30 volts dc or 175 volts ac.

S.I.C. - Fine silver heel contact with silver-impregnated carbon front and back contacts. These contacts have a capacity of 4 amperes at 30 volts dc or 175 volts ac.

H.D. - Fine silver heel contact with silver-impregnated carbon front contact and fine silver back contact. These contacts have a capacity of 15 amperes at 30 volts dc or ac.

Other types of contact material, for special application, is presented in the relay tabulations. Std. contacts are factory adjusted to standard 0.050″ minimum opening and conform to AAR requirements.

The front and back contacts are designated F and B, respectively, in the tabulations. The dependent contacts are denoted in the tabulations as FB while the independent contacts are denoted by use of the F or B alone.

COVER

A cover of transparent molded material houses the relay contacts and armature structure. The cover is sealed to its frame by pressure against a gasket providing a tight dust-proof moisture protected assembly.

FRONT TESTING FACILITY

This testing facility is in series with the coil control circuit to permit deenergization of the relay while in service without disturbing the relay or wiring.

LATCH

A spring-operated latch holds the relay to the mounting base. It is released by pressing a button on front of the relay.

SYSTEM VOLTAGE

This voltage, listed in the individual relay tabulations, is prescribed for relays in locally energized circuits. Higher voltages may be used, if desired, up to a maximum of 10 watts power dissipation.

MOUNTING BASES

Mounting bases for plug-in relays are not included with the relays and must be ordered separately. As of 1982, new mounting bases are available having new part numbers (see RSE-4G1). The catalog sections that follow may not reflect these new part numbers. If the old part number is known, the part number for the equivalent base can be found in Table 1 of RSE-4G1.

The mounting bases are arranged to be permanently fastened to horizontal supporting bars. Circuit connections to the receptacle terminals at the rear of each mounting base are of the solderless type (standard) which will accept one or two #14/#16 AWG wires independently. The front testing test plug (J772383) is used for insertion and removal of receptacles.

LINE CIRCUIT APPLICATIONS

The figure below illustrates one end of a reversible polarized line circuit in which three PN-150 relays are used (PN-150B, PN-150BD, PN-150BSR).

The PN-150B fulfills the requirements for a biased relay needed in the application.

The PN-150BD is a three position dc relay which combines the features of two biased relays, oppositely connected, in one structure.

The PN-150BSR is a slow dropaway relay which bridges the reversal of the PN-150BD.

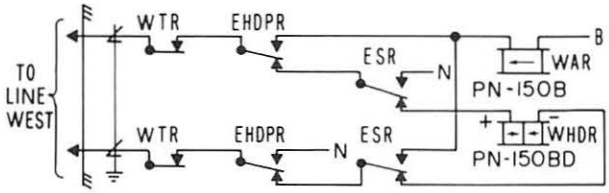

HD LINE CONTROL CIRCUIT

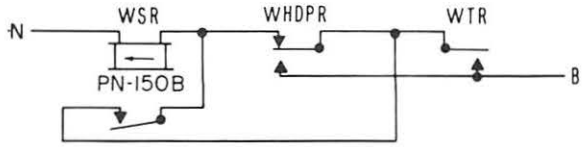

DIRECTIONAL STICK CONTROL

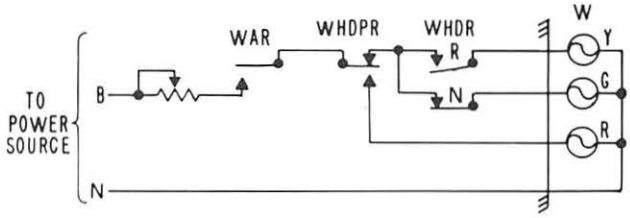

SIGNAL LAMP CIRCUIT

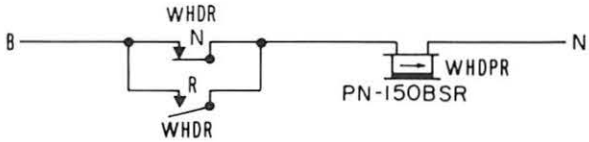

REPEATER CIRCUIT

SIGNAL CIRCUIT FOR SIGNALING WESTBOUND TRAIN ON EAST-WEST TRACK

TRACK CIRCUIT APPLICATIONS

PN-150BTR track relay, standardized with a 1-ohm coil, may be used in track circuits with the approximate maximum lengths as shown below in Table I.

A PN-150BTR track relay with a 4-ohm coil is also available for use in short primary battery track circuits.

Track lengths shown in the tabulation below are approximate and apply only to circuits energized from the power sources listed in Table II.

TABLE I
TRACK CIRCUIT LENGTHS

TYPE TRACK CIRCUIT	BALLAST RESISTANCE OHMS per M'	APPROX. MAX. LENGTH (FT)
END FED DC	3	4000
	5	6000
CENTER FED DC	3	8000
	5	12000
AC-DC. AC FEED. FULL WAVE RECTIFIER AT RELAY END	3	2000
	5	3000
AC-DC. AC FEED RELAY at TRANSFORMER END. HALF WAVE RECTIFIER at OPPOSITE END.	3	4000
	5	6000
END FED DC with PN-150B MULTIPLE APPROACH RELAY	3	4000
	5	6000

TABLE II
POWER SUPPLIES

	MAX. LEAD RESISTANCE (OHMS)
Caustic Soda Primary Battery	0.25
Air Cell Primary Battery	0.8
Nickel Storage Battery	0.8
Lead Storage Battery	0.8
Constant Potential Rectifier	0.8

INDEXING

Relays are equipped with indexing pins to prevent the insertion of an incorrect relay into the mounting base. Each relay is accompanied by an indexing plate which is applied to the base at the initial installation. A typical plug-in relay with indexing pins and corresponding base with indexing plate are shown below.

TESTING

Testing may be accomplished through the rear of the relay mounting base without opening a contact or coil circuit and through the front on relays equipped with front testing facilities. For tools utilized in installation and testing of PN-150 and PN-250 relays, refer to pages 7 and 8. For adjustment and maintenance tools, refer to Catalog Section RSE-18, "TOOLS".

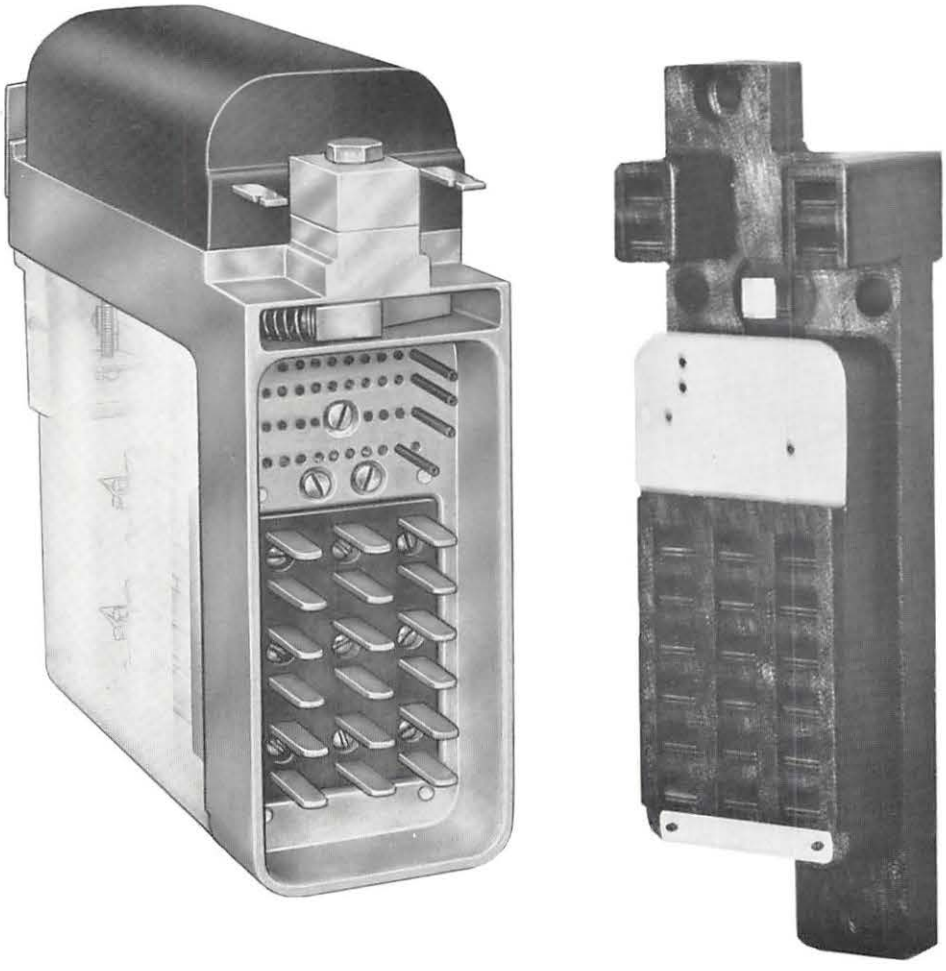

TYPICAL PLUG-IN RELAY SHOWING INDEXING PINS AND MOUNTING BASE ON RIGHT.

MOUNTING ARRANGEMENTS

Typical mounting arrangement of plug-in relays installed on Universal Equipment Racks and Style RS Sheet Steel Equipment Cases are illustrated in the following two figures. For details on racks and cases used with plug-in relays, refer to Catalog Section RSE-9 "HOUSINGS, CASES, AND JUNCTION BOXES".

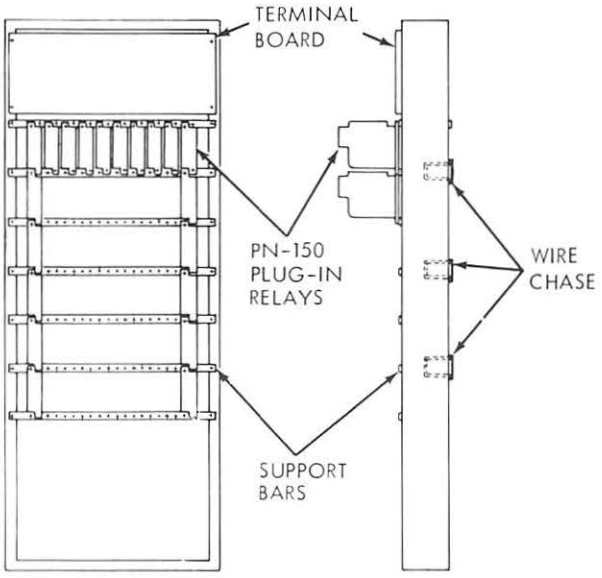

TYPICAL ARRANGEMENT OF PN-150 RELAYS ON UNIVERSAL EQUIPMENT RACK

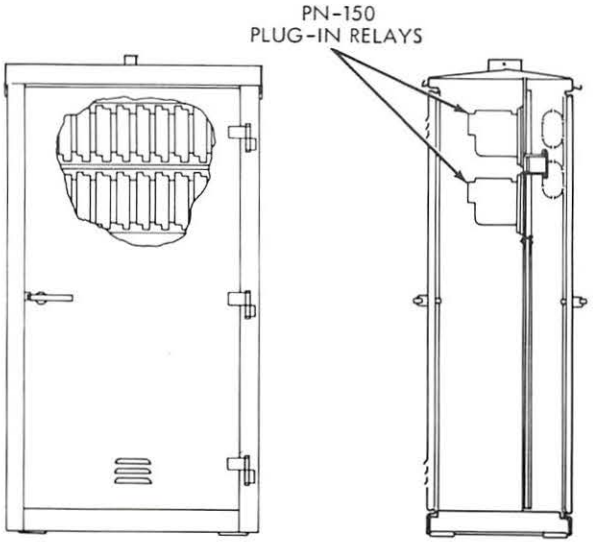

TYPICAL ARRANGEMENT OF PN-150 RELAYS IN STYLE CS-II EQUIPMENT CASE.

The plug-in relays may be mounted in equipment cases, on universal equipment racks, or at locations adaptable to the standard mounting bases. Vertical dimensions of the mounting bases are shown below.

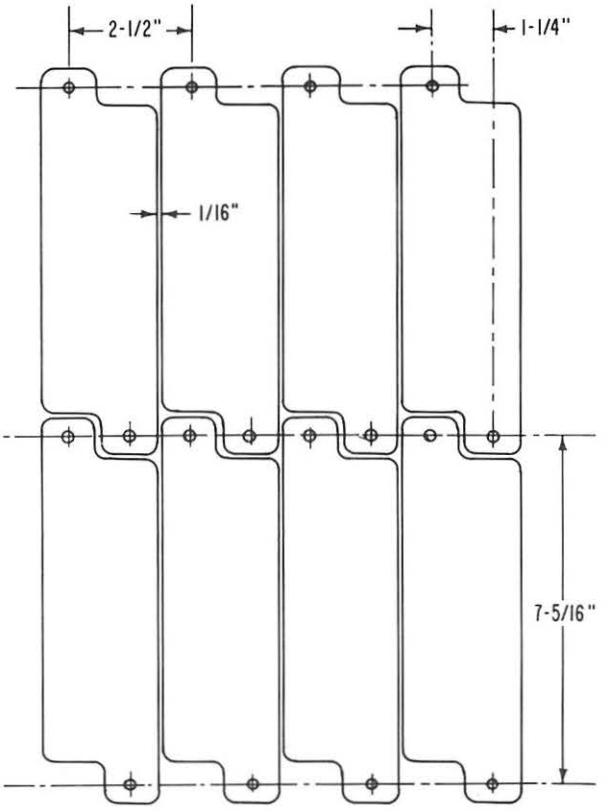

VERTICAL RACK MOUNTING DIMENSIONS OF PN-150 RELAYS

SHELF MOUNTING BRACKETS

US&S offers shelf mounting brackets for individually mounting PN-150 and PN-250 relays in equipment cases. These brackets can be used when modifying an existing signal system to save shelf space. Many of the plug-in relays, such as the PN-150T Time Element Relay, have improved characteristics which justify their use in installations that are predominantly shelf type relays.

Two sizes of brackets are available, one for a single PN-150 relay, and the second of double size width, suitable for a single PN-250 or two PN-150 relays. Brackets can be purchased with or without terminal blocks. The single bracket has 3 terminals and the double bracket has 6 terminals, when furnished.

The bracket is a welded assembly and uses weld nuts where the mounting base screws enter the bracket. Black wrinkle finish is standard.

Holes in the base permit the bracket to be fastened to the shelf by means of screws. The two screws at the front of the base can be removed with the relay plugged-in, while the "button hole"design of the rear hole permits removing the bracket without removing the rear screw.

FEATURES

- Saves shelf space when modifying existing signal systems.
- Simple and functional design.
- Optional terminal block permits relay control or other circuit to be opened from the front of the relay.
- Assembly can be turned around easily for access to the connections at the rear.
- Nylon cable clamp holds wire in position without stress on the receptacle springs.

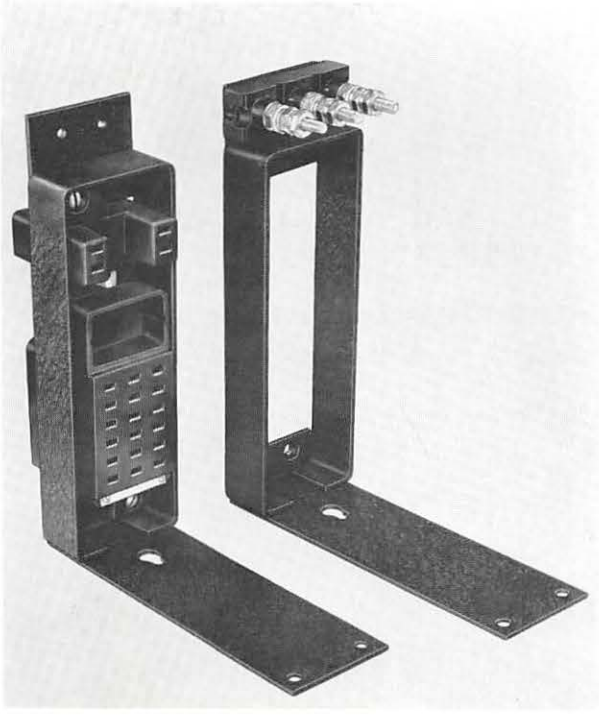

Height	Width	Depth
9-11/16"	2-13/16"	8"

SINGLE WIDTH SHELF MOUNTING BRACKETS

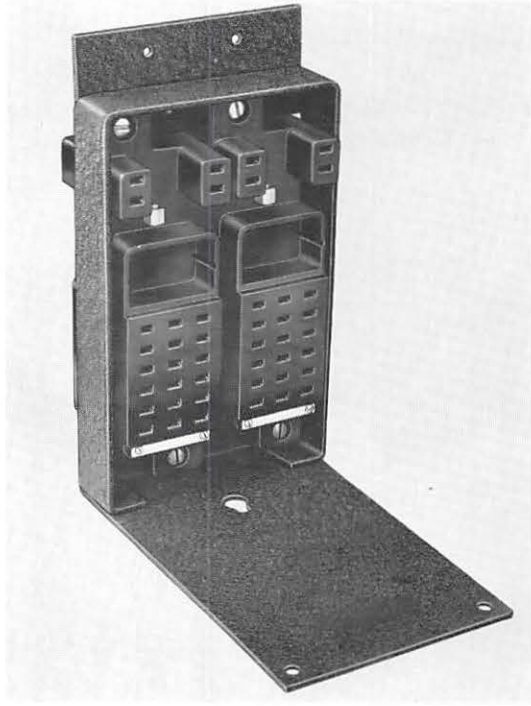

Height	Width	Depth
9-11/16"	5-5/16"	8"

DOUBLE WIDTH SHELF MOUNTING BRACKET

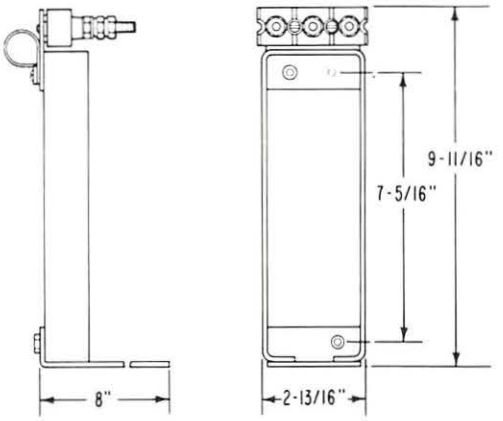

SHELF MOUNTING BRACKET for SINGLE WIDTH RELAYS

PART NO.	DESCRIPTION
N373826	SHELF MOUNTING BRACKET with 3-Terminal Block, for Single PN-150 Relay.
N373904	SHELF MOUNTING BRACKET without Terminal Block, for Single PN-150 Relay.

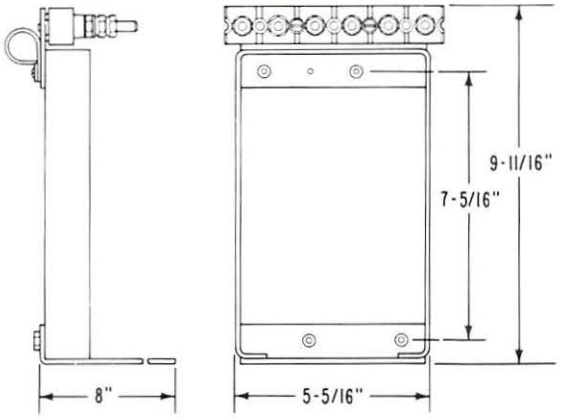

SHELF MOUNTING BRACKET for 2 SINGLE WIDTHS OR 1 DOUBLE WIDTH RELAY

PART NO.	DESCRIPTION
N373828	SHELF MOUNTING BRACKET with 6-Terminal Block, for one PN-250 or two PN-150 Relays.
N373914	SHELF MOUNTING BRACKET without Terminal Block, for one PN-250 or two PN-150 Relays.

RECEPTACLE CONTACT SPRINGS

Mounting bases are shipped with a full complement of contact springs for AWG #14/#16 wire. Contact springs for AWG #10/#12 and #18/#20 wire are also available. Determine your requirements and order from the tabulation.

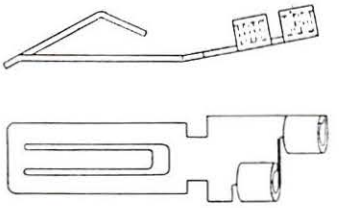

AWG WIRE SIZE	CONTACT SPRING
#14 / #16	M451142-2702
#10 / #12	M451142-2703
#18 / # 20	M451142-2701

RELAY TEST PLUGS

Test plugs have been designed to enable testing of PN-150 and PN250 relays while in service without disturbing the relay or wiring. The test plug used for front testing is also used for removing and inserting the receptacle contact springs.

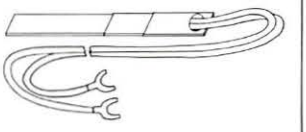

PART NO.	DESCRIPTION	PART NO.	DESCRIPTION
J772383	FRONT TESTING TEST PLUG	N322965	BACK TESTING TEST PLUG

SHELF MOUNTING FRAME

A shelf-mounted frame for plug-in relays is also available. The frame is 36″ wide, 11″ high and 8″ deep and will fit into any standard case 3′ 3-½″ or larger. It will accept up to 13 PN-150 relay bases or 6 PN-250 relay bases, or a combination of the above sizes. Only two mounting holes are required in the shelf for each end bracket of the frame. The mounting frame is more economical than single units and lends itself to factory or shop wiring of new plug-in units to provide an economical changeover from shelf to plug-in relays.

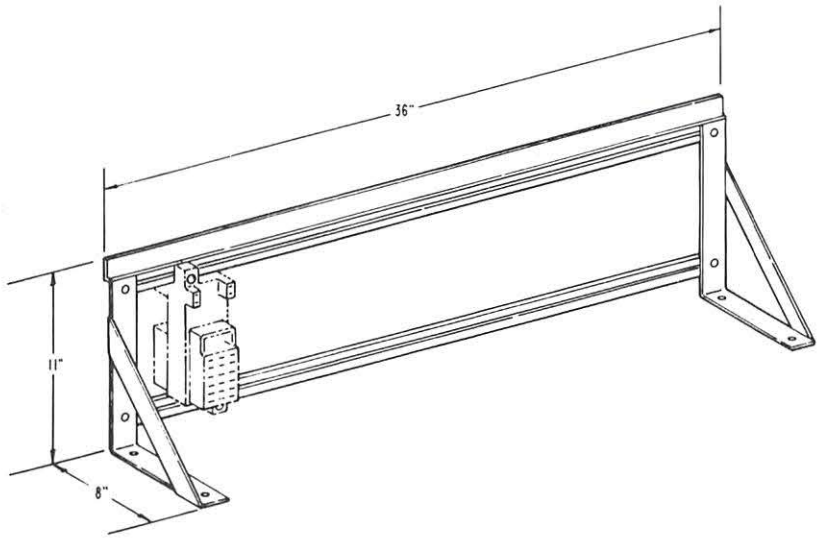

PART NO.	DESCRIPTION
N436182-001	SHELF MOUNTING FRAME with 36 AAR terminals mounted above plug-in base.
N436182	SHELF MOUNTING FRAME without AAR terminals.

CRIMPING TOOLS

US&S offers standard crimping tools for various wire sizes for crimping PN-150 and PN-250 relay receptacle contact springs. Order the crimping tools by part number from the tabulation. To aid in identification specify the appropriate wire size along with the part number when ordering.

CRIMPING TOOL PART NO.	AWG. WIRE SIZE	OLD STYLE RECEP. CON. SPRING	NEW DESIGN RECEP. CON. SPRING
J397139	#14/#16	J690165	M451142-2702*
J397138	#10/#12	J680181	M451142-2703
J397188	#18/#20	J680179	M451142-2701

*Relay bases are shipped with these receptacle springs as standard

VITAL PLUG-IN DC LINE RELAYS
(Biased Type)

PN-150B
PN-150BD

PN-150HD
PN-250B

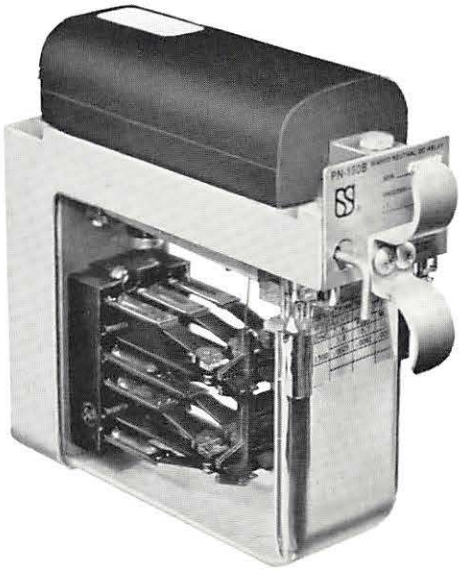

PN-150B RELAY

This catalog section covers biased type DC relays, which include PN-150B, PN-150BD, PN-150HD and PN-250B.

The PN-150B and PN-250B are standard biased relays. The PN-250B relay is similar to the PN-150B, but is double the width.

The PN-150BD is a special 3-positioned biased relay. The PN-150HD has heavy duty contacts.

ORDERING INFORMATION

Order the relays described in this catalog section by part number from the tabulations given beneath each description. To aid in identification, specify the contacts and coil resistance along with the part number when ordering.

A mounting base is required for each relay and must be ordered by part number. The mounting base required for each relay is listed or noted below each tabulation. When ordering the mounting base, specify the relay with which it is to be used. For details on mounting plug-in relays, such as rack dimensions, etc., refer to Catalog Section RSE-4.

Front testing facility, which is a means for opening the coil circuit during system check-out or reading current without disturbing the relay or its wiring, is available on some relays listed in this catalog section. These relays are noted in the individual tabulations.

Energization values given for each relay are the values that the relay will beome energized, but generally response will occur at some lower value.

PRINTED IN USA

UNION SWITCH & SIGNAL DIVISION
AMERICAN STANDARD INC./ PITTSBURGH, PA 15237

COPYRIGHT 1986, US&S DIVISION OF AMERICAN STANDARD INC

PN-150B RELAY

The PN-150B biased relay has been designed for use in line and logic circuits requiring contact capacities up to 4 amperes. If greater capacity is required, see the PN-150HD relay. If an equivalent relay with more contacts is required, see the PN-250B relay.

Because the relay is naturally biased, it becomes a battery-checking relay to ensure that the logic energy is of the proper polarity. This is especially important where some of the circuits are polarity responsive, such as switch repeating and polar line circuits. If response to both polarities is required, see the PN 150N relay. For a relay with lower energization values, see the PN-150BE relay.

PART NO.				ENERGIZATION		
WITH FRONT TESTING	NO FRONT TESTING	CONTACTS	COIL RESIS. OHMS	AMPS	DC VOLTS	SYSTEM VOLTAGE
N322500 -706		6FB Std.	25	0.0504	1.26	*
N322500 -704		6FB Std.	100	0.0264	2.64	*
N322500 -705		6FB Std.	240	0.0177	4.24	*
N322500 -701	-801	6FB Std.	400	0.0132	5.3	10
N322500 -702	-802	6FB Std.	800	0.0105	8.4	12-14
N322500 -703	-803	6FB Std.	1300	0.0082	10.7	16-24
N322500	-809	4FB, 2F, 1B Std.	400	0.0132	5.3	10
N322500	-808	4FB, 2F, 1B Std.	800	0.0105	8.4	12-14
N322500	-807	4FB, 2F, 1B Std.	1300	0.0082	10.7	16-24
N322500	-810	6FB Std.	4300	0.0040	17.58	24
N322500 -711		2FB, 4F Std., 4B S.I.C.	400	0.0132	5.3	10

*Normally used in series with another relay.
All relays have Lexan® covers.

CONTACTS — standard low voltage silver to silver-impregnated carbon front and silver to silver back.

MOUNTING BASE — N451376-0302 (Used for all relays listed in the above tabulation.)

PN-150BD RELAY

The PN-150BD Relay is a three-position relay which is a combination of two biased relays to sense that a circuit is a.) deenergized, b.) energized with normal polarity, or c.) energized with reverse polarity. Each applied polarity energizes one of the biased armatures which actuates three transfer contacts. Since a polarity change causes one set of front contacts to open before the other set closes, there is a short period when neither set is closed. Generally, a PN-150BSR Relay is used as a repeater to bridge the changeover when a continuous "circuit energized" output is required.

PART NO.		CONTACTS		COIL RSIS. OHMS	ENERGIZATION		REC'MND. WORKING VOLT. FOR 0.9 SEC. REVERSAL TIME	SYSTEM VOLTAGE
WITH FRONT TESTING	NO FRONT TESTING	NORMAL	REVERSE		AMPS.	DC VOLTS		
N322504-702		3FB Std.	3FB Std,	100	0.0283	2.83	3.05	*
N322504-701		3FB Std.	3FB Std.	400	0.0141	5.65	6.08	10
N322504-703	-803	3FB Std.	3FB Std.	800	0.0112	8.95	9.67	12-14
N322504-704		3FB Std.	3FB Std.	25	0.054	1.35	1.46	

*Normally used in series with another relay.

Contact Assignments -

Contact Number	Contact Type
1,4,5	FB Normal
2,3,6	FB Reverse

CONTACTS — standard low voltage silver to silver-impregnated carbon front and silver to silver back.

MOUNTING BASE — N451376-0302 (Used for all relays listed in the above tabulation.)

PN-150HD RELAY

The PN-150HD Relay has six transfer contacts, four are heavy duty which can carry 15 amperes up to 30 volts dc and ac. The other two contacts are standard contacts with a 4-ampere capacity. This relay can be used in place of a PN-150B Relay when greater contact capacity is required. The PN-150HD requires the indicated polarity for its operation. However, due to the high back contact pressure, it cannot be considered a biased relay in accordance with AAR specifications.

PART NO.						
WITH FRONT TESTING	NO FRONT TESTING	CONTACTS	COIL RSIS. OHMS	ENERGIZATION		SYSTEM VOLTAGE
				AMPS.	VOLTS (DC)	
N322505-701		4FB H.D. 2FB Std.	400	0.0132	5.3	10
N322505-702		4FB H.D 2FB Std.	800	0.0105	8.4	12-14
N322505	-803	4FB H.D. 2FB Std.	1300	0.0082	10.7	16-24

CONTACTS — (H.D.) heavy duty silver to silver-impregnated carbon front and silver to silver back.
(Std.) standard low voltage silver to silver-impregnated carbon front and silver to silver back.

Contact Assignments -

Contact Number	Contact Type
1, 3, 4, 6	FB H.D.
2, 5	FB Std.

All relays have Lexan® covers.

MOUNTING BASE — N451376-0302 (Used for all relays in the above tabulation)

PN-250B RELAY

The PN-250B Relay is a biased relay for use in line and logic circuits. It is used in place of a PN-150B Relay when additional contacts are required. Coils of this relay may be externally connected in series or in multiple. For a relay which operates on lower energization values, see the PN-250BE Relay (RSE-4E3).

PART NO.			COIL RESIS. OHMS		ENERGIZATION		
WITH FRONT TESTING	NO FRONT TESTING	CONTACTS	SERIES	MULTIPLE	AMPS.	VOLTS (DC)	SYSTEM VOLTAGE
N322554 –701	–801	6FB, 6F, 3B Std.	1000		0.0104	10.43	16-24
				250	0.0209	5.22	10-14
N322554 –702	–802	8FB, 4F, 2B Std.	1000		0.0104	10.43	16-24
				250	0.0209	5.22	10-14

CONTACTS — standard low voltage silver to silver impregnated carbon front and silver to silver back.

All relays have Lexan® covers.

MOUNTING BASE — N438689-003
(Used for all relays in the above tabulation)

Contact Assignments -

Relay	Contact Number	Type
N322554-701, 801	1-6	FB
	7-12	F
	13-15	B
N322554-702, 802	1, 3, 4, 6, 8, 10, 11, 13	FB
	2, 7, 9, 14	F
	5, 12	B

VITAL PLUG-IN TIME ELEMENT RELAYS

PT-55

This catalog section covers the PT-55 Relay. It is a vital plug-in relay designed to provide reliable timing in wayside circuits.

GENERAL INFORMATION

The PT-55 is a mechanical (ratchet, pawl and gear train) time element relay used in conjunction with a code transmitter relay (PC-57 or PC-250TR) to provide time locking of switches in interlockings.

The time range is adjustable, within specified limits, for each part number, when driven by the appropriate code rate from the code transmitter relay.

ORDERING INFORMATION

The tabulations that follow contain part numbers and specifications for the relays. To aid in indentification, specify normal energization volts and time range along with the part number when ordering.

A mounting base is required for each relay and must be ordered separately. Order by part number provided. For information on mounting plug-in relays, such as rack dimensions, etc., refer to Cataloge Section RSE-4.

PART NO.	NORMAL ENERG. VOLTS	TIME RANGE	MOUNTING BASE
N233133	16	2.5 - 25 sec.	N347968
N233133-001*	16	2.5 - 25 sec.	N347968
N265422	10	1.0 - 11 min.	N294403
N227899	16	0.5 - 6 min.	N292774
N232138	12	0.5 - 6 min.	N292774
N279987-001*	16	10 - 120 sec.	N374969

*With Lexan cover

		CLUTCH MAGNET			OPERATING MAGNET				OPERATING TEST VOLTAGES @ 240 CODE FREQ. (SEE NAME PLATE)	
NORMAL ENERG. VOLTS	CHARGE VOLTS	COIL RESIST. IN OHMS	MIN. DROP-AWAY VOLTS	MAX. COIL P.U. & WRK. VOLTS	MIN. RESIST. IN OHMS	DROP-AWAY VOLTS	NORMAL VOLTS	HEAVY LOAD VOLTS	MIN. VOLTS	MAX. VOLTS
10	15	65	1.00	5.30	72	0.31	2.5	3.2	7.0	15
12	18	100	1.25	6.70	112	0.40	3.3	4.2	7.0	18
16	24	150	1.50	8.20	112	0.40	3.3	4.2	7.5	24

PRINTED IN USA

UNION SWITCH & SIGNAL DIVISION
AMERICAN STANDARD INC./ PITTSBURGH, PA 15237

COPYRIGHT 1986, US&S DIVISION OF AMERICAN STANDARD INC.

MOUNTING BASES FOR PN-150 and PN-250 RELAYS

US&S offers a new line of mounting bases for PN-150 and PN-250 plug-in relays. Molded in one piece, these bases are less deep than previous bases, yet provide a deeper interior cavity for easier wire pass-through. Ordering references have been reduced to four part numbers for the PN-150 mounting base and four part numbers for the PN-250 mounting base.

These new bases are made from long lasting, flame resistant black thermoplastic polycarbonate material. They are constructed in one piece, and are only 1-25/32" deep. Although these bases are not as deep as previous bases, the terminal cavities have greater volume. This permits easier engagement and extraction, for example when using the #10-12 contact spring with two #10 wires. Maintenance tools used on previous US&S bases can also be used on the new bases.

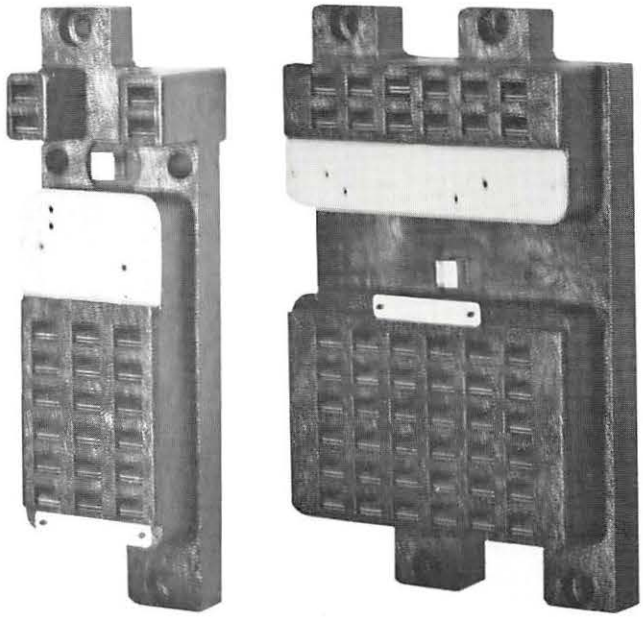

PN-150 MOUNTING BASE

PN-250 MOUNTING BASE

NEW NOMENCLATURE INDEX

Our new standardized alpha-numeric nomenclature matrix (See illustration under ordering information) identifies cavitiy rows and relay contact locations. Fronts will always be one less than the heel, and the heel will always be one less than the back. The new matrix also allows for quick identification of circuit locations where a circuit board is required on the backs of the base. Rows 3 thru 6, shown in the illustration under ordering information, are allocated for that purpose.

CROSS REFERENCE INDEX

The cross reference index - Table I provides you with equivalent new part numbers when ordering new mounting bases. To facilitate prompt delivery, refer to Table I when replacing existing mounting bases with our new design bases.

FEATURES

- A new standard nomenclature to identify contact cavity rows and columns.
- Made from durable, flame resistant black thermoplastic polycarbonate.
- Shorter base design and larger interior cavity space make wire pass-through easier.
- Fewer part numbers, less stocking required.

PRINTED IN USA

UNION SWITCH & SIGNAL DIVISION
AMERICAN STANDARD INC./ PITTSBURGH, PA 15237

COPYRIGHT 1986, US&S DIVISION OF AMERICAN STANDARD INC.

RSE-4G1
REV. 6/86

TABLE 1
MOUNTING BASES — CROSS REFERENCE INDEX

PN-150 Mounting Base

EXISTING PART NUMBER	NEW PART NUMBER
N334266	N451376-0302
N335727	N451376-0302
N341626	N451376-0302
N341785	N451376-0302
N344874	N451376-0302
N349904	N451376-0302
N372344	N451376-0302
N376048	N451376-0302
N376439	N451376-0302
N382273	N451376-0302
N384259	N451376-0302
N398314	N451376-0302
N399506	N451376-0302
N399689	N451376-0302
N437090	N451376-0303
N438562	N451376-0302
N432995	N451376-0302
N433830	N451376-0302
N434814	N451376-0302
N436797	N451376-0303
N334266-099	N451376-0301
N335727-099	N451376-0301
N341626-099	N451376-0301
N341785-099	N451376-0301
N344874-099	N451376-0301
N349904-099	N451376-0301
N372344-099	N451376-0301
N376048-099	N451376-0301
N376439-099	N451376-0301
N382273-099	N451376-0301
N384259-099	N451376-0301
N398314-099	N451376-0301
N399506-099	N451376-0301
N399689-099	N451376-0301
N437090-099	J780055
N438562-099	N451376-0301
N432995-099	N451376-0301
N433830-099	N451376-0301
N436797-099	J780055
X334266-001	N451376-0302
X335727-001	N451376-0302
X341626-001	N451376-0302
X341785-001	N451376-0302
X344874-001	N451376-0302
X349904-001	N451376-0302
X372344-001	N451376-0302
X376048-001	N451376-0302
X376439-001	N451376-0302
X399506-001	N451376-0302
X399689-001	N451376-0302
X437090-001	N451376-0303
X438562-001	N451376-0302
X432995-001	N451376-0302
X433830-001	N451376-0302

PN-250 Mounting Base

EXISTING PART NUMBER	NEW PART NUMBER
N349769	N438689-001
N373979	N438689-003
N374117	N438689-001
N376442	N438689-003
N378609	N438689-003
N382814	N438689-003
N382816	N438689-003
N384243	N438689-001
N385205	N438689-001
N385788	N438689-001
N385790	N438689-001
N386458	N438689-003
N434647	N438689-003
N438695	N438689-003
N434650	N438689-003
N349769-099	N438689
N373979-099	N438689-002
N374117-099	N438689
N376442-099	N438689-002
N378609-099	N438689-002
N382814-099	N438689-002
N382816-099	N438689-002
N384243-099	N438689
N385205-099	N438689
N385788-099	N438689
N385790-099	N438689
N386458-099	N438689-002
N434647-099	N438689-002
N434650-099	N438689-002
N438695-099	N438689-002
X349769-001	N438689-001
X373979-001	N438689-003
X374117-001	N438689-001
X376442-001	N438689-003
X378609-001	N438689-003
X382814-001	N438689-003
X382816-001	N438689-003
X384243-001	N438689-001
X385205-001	N438689-001
X434647-001	N438689-003
X434650-001	N438689-003
X438695-001	N438689-003

ORDERING INFORMATION

Order from the tabulation below, or if replacing an existing relay mounting base, refer to Table 1, Mounting Base Cross Reference Index. ***Part numbers for the Receptacle Contact Springs are listed on the back page.***

MOUNTING BASE FOR PN-150 RELAY

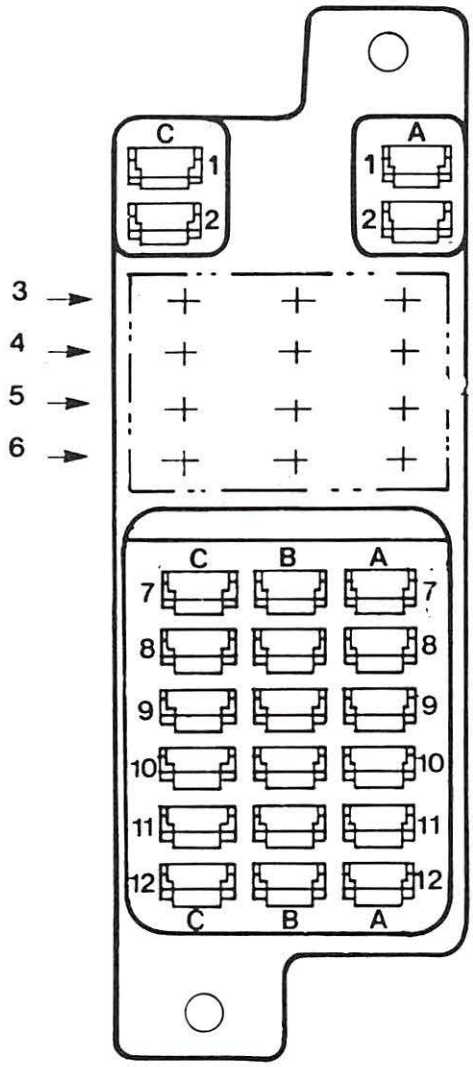

PART NO.	DESCRIPTION
N451376-0301	Wayside Mtg. Base Only
N451376-0302	Wayside Mtg.Base with Hardware.
N451376-0303	Car-Carried Mtg. Base with Hardware

MOUNTING BASE FOR PN-250 RELAY

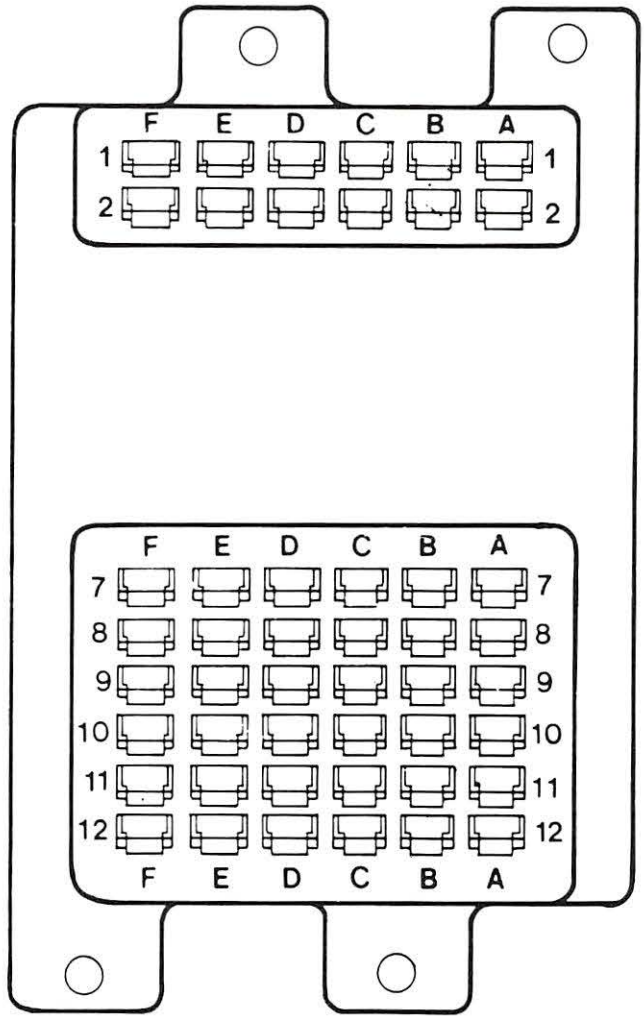

PART NUMBER	DESCRIPTION
N438689	Mounting Base only Latch facing right
N438689-001	Mounting Base Latch facing right, w/ Hardware
N438689-002	Mounting Base Only Latch facing left
N438689-003	Mounting Base Latch facing left, w/ Hardware

RECEPTACLE CONTACT SPRINGS

Contact springs are available for AWG #10/#12, and #14/#16, and #18/#20 wire. Determine your requirements and order from the tabulation.

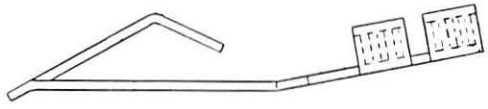

SIDE VIEW

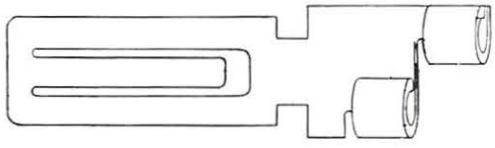

TOP VIEW

AWG WIRE SIZE	CONTACT SPRING
#14 / #16	M451142-2702
#10 / #12	M451142-2703
#18 / # 20	M451142-2701

VITAL SHELF DC LINE RELAYS
(Neutral)

DN-11

This catalog section covers DN-11 and DN-22A Neutral DC Line Relays. The DN-11 Relay has wide application in line signal circuits requiring an ordinary acting neutral relay with 4-, 6-, or 8-contacts.

The DN-22A Relay is an ordinary acting neutral relay and is available in a 2-contact configuration.

The DN-11 and DN-22A Relays may also be used in track circuits as described in Catalog Section RSE-5A2.

DN-11 NEUTRAL DC RELAY

DN-11 Relays covered in this catalog section are neutral line relays with ordinary acting characteristics. Arrangements of 4-, 6-, and 8-contacts are available with low voltage and heavy duty contacts.

Contacts are Standard: silver to silver-impregnated carbon front and silver to silver backs. S.I.C. contacts are also available and are designated in the tabulation. These contacts have a 4-ampere capacity at 30 volts dc or 175 volts ac.

Special heavy duty low voltage contacts are also available and are designated H.D. in the tabulations. These contacts have a 15-ampere capacity and are silver-impregnated carbon front and silver to silver back.

DN-11 Relays contain compound spring contacts which improve back contact performance during vibration.

These relays are supplied with shock absorbers for shelf mounting. Wall mounting brackets with shock absorbers will be supplied when specified on the order.

DN-22A

Connections to the relays can be made directly or through plug couplers that permit quick connections to the terminals for removal and replacement.

DN-22A NEUTRAL DC RELAY

The DN-22A Relay is an ordinary acting two-contact relay and is available with low voltage contacts only.

Contacts are Standard: silver to silver-impregnated carbon front and silver to silver backs. S.I.C. contacts are also available and are designated in the tabulation. These contacts have a 4-ampere capacity at 30 volts dc or 175 volts ac.

The armature dead weight torque of the DN-22A Relay is 50 percent greater than AAR requirements.

Mounting arrangements for the DN-22A are the same as the DN-11 Relay.

ORDERING INFORMATION

The tabulations that follow contain part numbers and specifications for ordering relays. For convenience the DN-11 Relay tabulations have been divided into 4-, 6-, and 8-contact arrangements. Variations in contacts are shown within each tabulation.

To order, consult the tabulation. Determine the contacts and coil resistance required, and order by the part number specified. To aid in identification, specify the contacts and coil resistance selected along with the part number when ordering.

Order should specify if wall mounting brackets are required.

Order should specify if plug couplers are required.

Energization voltage, as shown in the tabulations, is the voltage at which the relays assumes the full energized position.

COPYRIGHT 1986, US&S DIVISION OF AMERICAN STANDARD INC

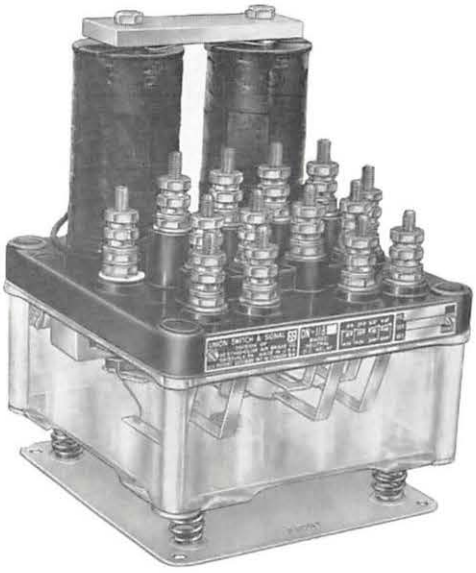

DN-11 RELAY (4-CONTACT)

HEIGHT	8-5/8″
WIDTH	6-1/4″
DEPTH	6-1/4″

NOT SHOWN: DN-11 RELAY (8-CONTACT)

HEIGHT	8-3/8″
WIDTH	9-5/8″
DEPTH	6-1/4″

DN-11 RELAY (6-CONTACT)

HEIGHT	8-5/8″
WIDTH	7-5/8″
DEPTH	6-1/4″

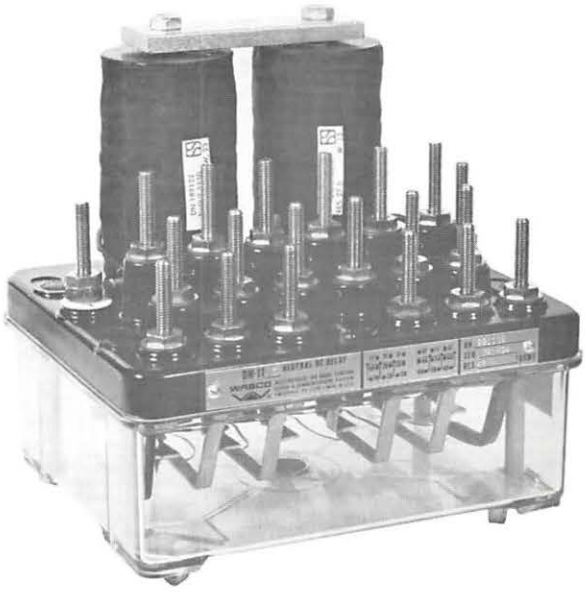

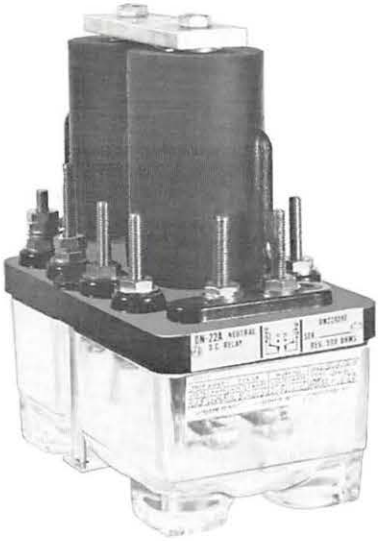

DN-22A RELAY (2-CONTACT)

HEIGHT	8-9/32″
WIDTH	4″
DEPTH	6-3/8″

4-CONTACT DN-11 SHELF NEUTRAL DC LINE RELAY (ORDINARY ACTING)

PART NO.	CONTACTS	COIL RESIS. OHMS	ENERGIZATION VOLTAGE	MIN. FULL D.A.	
				AMPS.	VOLTAGE
N213536	4FB Std.	55	1.09	0.0104	0.57
N159679	4FB Std.	60	1.26	0.0100	0.66
N159996	4FB Std.	250	2.61	0.0055	1.38
N157285	4FB Std.	500	3.50	0.0037	1.85
N157187	4FB Std.	1000	5.27	0.0028	2.78
N161396	4FB Std.	1500	6.56	0.0023	3.47
N214333	4FB H.D.	500	5.50	0.0037	1.85
N231336	2FB Std. 2FB H.D.	500	4.85	0.0037	2.05
N257117	4FB Std.	175	1.96	0.0059	1.04
N213667	4FB H.D.	670	6.70	0.0033	2.25
N214494	4FB H.D.	1000	8.27	0.0028	3.36
N214711	2FB Std. 2FB Special*	1000	5.27	0.0028	3.10

*Special - Contacts are silver to S.I.C. and heavy duty backs.

6-CONTACT DN-11 SHELF NEUTRAL DC LINE RELAY (ORDINARY ACTING)

PART NO.	CONTACT	COIL RESIS. OHMS	ENERGIZATION VOLTAGE	MIN. FULL D.A. VOLTAGE
N159871	6FB Std.	500	4.85	2.05
N159864	6FB Std.	670	5.91	2.47
N158263	6FB Std.	1000	7.30	3.10
N160025	6FB S.I.C.	1000	7.30	3.10
N262423	2FB Std. 4FB H.D.	500	6.45	2.55
N222664	6FB H.D.	1000	9.70	3.80

8-CONTACT DN-11 SHELF NEUTRAL DC LINE RELAY (ORDINARY ACTING)

PART NO.	CONTACTS	COIL RESIS. OHMS	ENERGIZATION VOLTAGE	MIN. FULL D.A.	
				AMPS.	VOLTAGE
N157353	8FB. Std.	670	6.70	.0041	2.72
N159870	8FB. Std.	500	5.50	.0045	2.23
N161333	8FB. Std.	1000	8.27	.0034	3.36

2-CONTACT DN-22A SHELF NEUTRAL DC LINE RELAY
(ORDINARY ACTING)

PART NO.	CONTACTS	COIL RESIS. OHMS PER PAIR	ENERGIZATION VOLTAGE	MIN. FULL D.A.	
				AMPS.	VOLTAGE
N224121	2FB Std.	16	0.44	0.0136	0.217
N224122	2FB Std.	40	0.67	0.0084	0.335
N224123	2FB Std.	60	0.89	0.0074	0.44
N239397	2FB Std.	500	2.50	0.0025	1.25
N224890	2FB Std.	1000	3.76	0.0019	1.88
N224382	2FB Std.	2000	5.55	0.0014	2.78
N251714	2FB Std.H.D.	1000	3.76	0.0019	1.88
N300717*	2FB Std.	2000	6.66	0.0016	3.22
N316906	2F S.I.C. 1B	2000	5.55	0.0014	2.78

*Special calibration for use with "UT" timing unit in highway crossing delayed start applications.
Relay max. full D.A. Amps 0.0018, volts 3.56.

POWER SUPPLIES

RECTIFIERS

Cross Reference Substitution Charts RSE-7A0
Constant Current Rectifiers RSE-7A1
Constant Potential Rectifiers RSE-7A2

CONVERTERS

F-40M DC/DC Converter RSE-7B1

INVERTERS

F-81 DC to AC Inverters RSE-7C1
F-82 DC to AC Inverters RSE-7C2

TRANSFORMERS

Cross Reference Substitution Chart RSE-7D0
W-400 Air Cooled Transformers RSE-7D1
W-800 Air Cooled Transformers RSE-7D2

BATTERY CHARGERS

CVF Series RSE-7E1

F-82 DC TO AC INVERTER

The US&S F-82 Inverter is a solid state power source specifically designed for use in Type "C" track circuit applications. A single F-82 unit can be used as the low voltage ac power source for up to four track circuits. The unit normally operates from 120 vac commercial power, but automatically transfers to standby batteries in the event of loss of ac power. Input power transfer is accomplished within the F-82 unit; so external transfer circuitry is not required. In the standby mode of operation, the F-82 converts dc to ac at a high efficiency to minimize battery drain.

The components are housed in a rugged sheet steel enclosure designed for either shelf or wall mounting using standard hardware. Electrical connections are made to external AAR terminals mounted on the front panel of the unit. Refer to back page for mounting dimensions.

CHARACTERISTICS

POWER INPUT
- Normal Operation:
  - Input voltage ..... 120 vac, 60 Hz (nom.)
  - Current ..... 1 amp max.
- Standby Operation:
  - Input voltage ..... 12 vdc (nom.)
  - Current ..... 10 amp. max.

POWER OUTPUT (track)
- Normal Operation:
  - Track output voltage ..... 5.5 vac
  - Sine waves, each secondary.
  - Current ..... 3.5 amp each secondary
- Standby Operation:
  - Track output voltage ..... 6.5 vac
  - Square waves, each secondary.
  - Current ..... 3.5 amp each secondary

Reverse battery protection ..... built-in

Operating temperature range .... $-40^{o}C$ to $+70^{o}C$

FEATURES

- Low maintenance.
- Automatic power transfer.
- Easy to install.
- Four (4) track output capability.
- Reverse battery protection built in.
- High efficiency operation.
- Reliable and stable in extreme temperature changes.
- Solid state design inverter circuitry.
- Wall or shelf mounted.
- AAR terminals for external connections.

PRINTED IN USA

UNION SWITCH & SIGNAL DIVISION
AMERICAN STANDARD INC./ PITTSBURGH, PA 15237

COPYRIGHT 1986, US&S DIVISION OF AMERICAN STANDARD INC.

RSE-7C2
REV. 6/86

APPLICATION

Figure 1 below shows a typical highway crossing application with three type "C" track circuits using an F-82 Inverter. The US&S RC-1 Track Rectifier located on the opposite ends of each track circuit, provides a half-wave rectified ac signal. This signal will normally energize the dc relay. The RC-1 is required in all F-82 Inverter installations. When a train occupies the track circuit, the rectifier is shunted and the dc relay is deenergized. All four F-82 outputs could be used in a 2-track highway crossing system, if type "C" track circuits are utilized in the approaches.

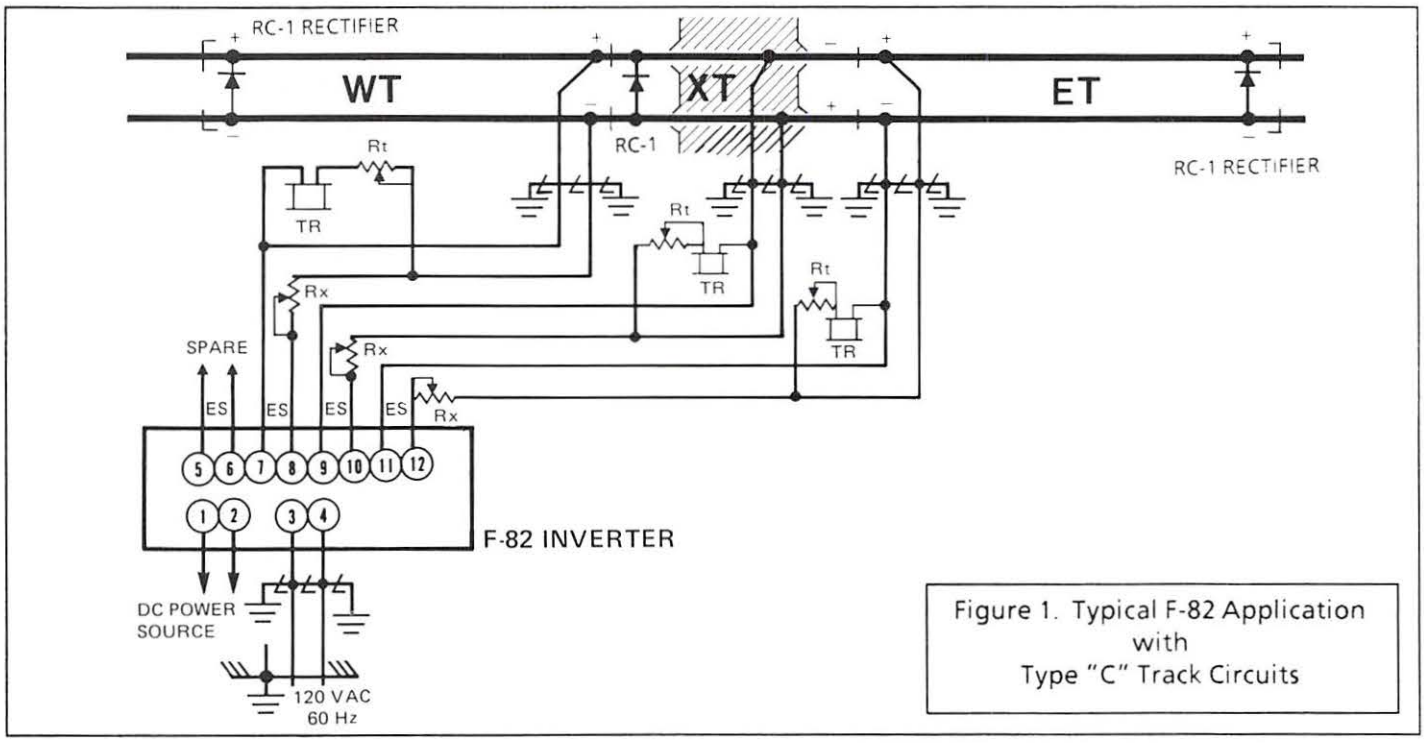

Figure 1. Typical F-82 Application with Type "C" Track Circuits

Figure 2. F-82 Dimensions and Part Number.

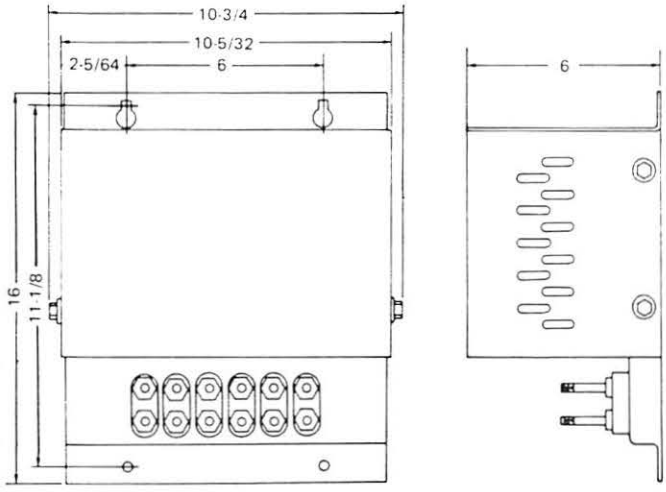

PART NUMBER	N451033-4101

Figure 3. RC-1 Rectifier

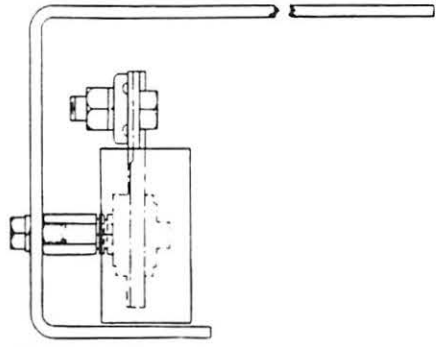

PART NUMBER	DESCRIPTION
N393795 N393794 X451646-0801	Complete Assembly Replacement Diode Only Installation Kit (Includes complete rectifier assembly, connectors, cables, tie staples)

W-800 AIR COOLED TRANSFORMERS

US&S W-800 air cooled transformers are provided to supplement US&S W-400 transformers in applications requiring a higher capacity with a wide variety of input-output configurations. These transformers have improved efficiency and provide trouble-free service over long periods. They are suitable for all signal applications.

DESCRIPTION

The W-800 Transformer is designed for indoor use only. It is fully air cooled, and consists of a wound coil and laminations in a sheet metal housing. Coil leads are brought out to terminal posts mounted on a moulded terminal board. This board is silk screened with all transformer operating information. Both primary and secondary connections are made at the top of the transformer. The tabulation below lists available output ratings. Refer to page 2 for operating nomenclature and wiring hardware.

ORDERING REFERENCES

PART NO.	DESCRIPTION
N451469-0106	Transformer, 115/100V, 25/100 Hz, 460 VA
N451469-0101	Transformer, 120/114V, 60/100 Hz, 720 VA
N451469-0104	Transformer, 120/114V, 60/100 Hz, 740 VA
N451469-0102	Transformer, 240/228V, 60/100 Hz, 720 VA
N451469-0105	Transformer, 240/228V, 60/100 Hz, 744 VA

FEATURES

- Meets or exceeds AAR specifications
- 115, 120 or 240 volt input.
- Wall, shelf or rack monted
- Wide range of capacities - high efficiency.
- Adjustable secondaries - adjustments additive

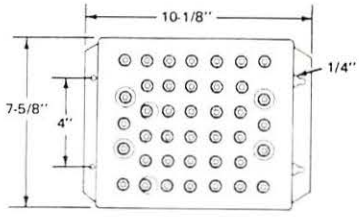

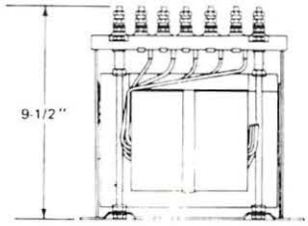

PRINTED IN USA

UNION SWITCH & SIGNAL DIVISION
AMERICAN STANDARD INC./ PITTSBURGH, PA 15237

COPYRIGHT 1986 US&S DIVISION OF AMERICAN STANDARD INC

RSE-7D2
REV. 6/86

UNIT OPERATING NOMENCLATURE AND SCHEMATICS

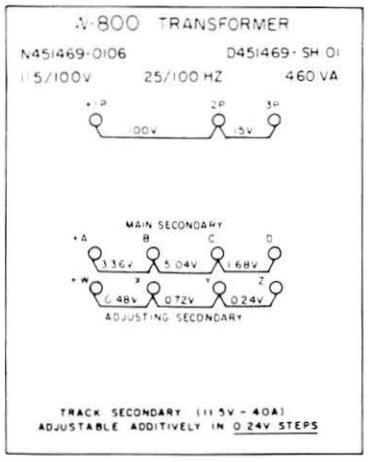

N451469-0106

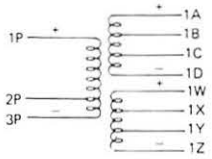

SCHEMATIC
N451469-0106

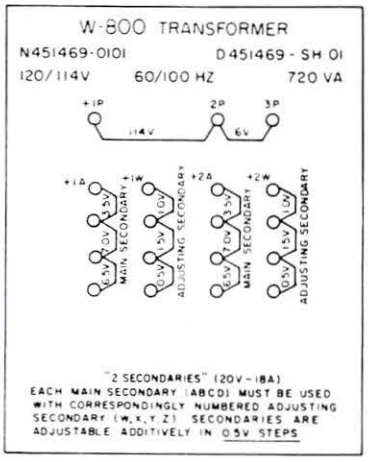

N451469-0101

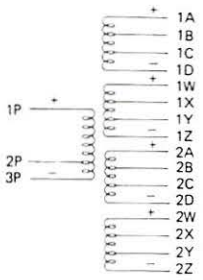

SCHEMATIC
N451469-0101

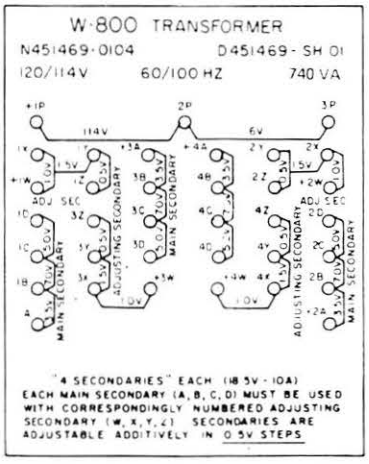

N451469-0104

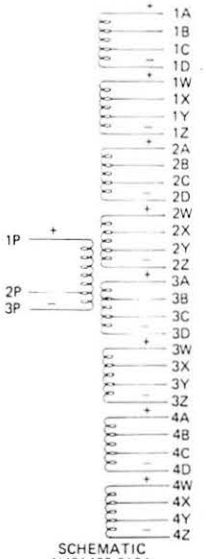

SCHEMATIC
N451469-0104

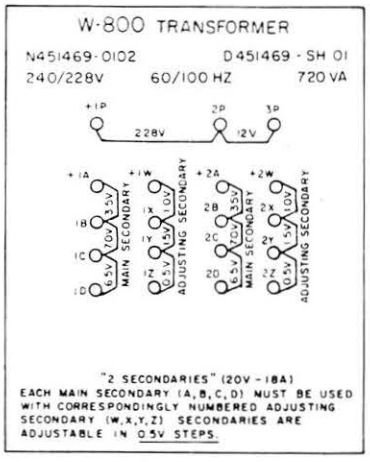

N451469-0102

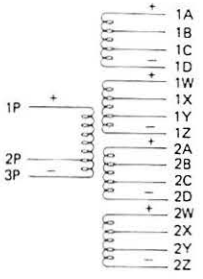

SCHEMATIC
N451469-0102

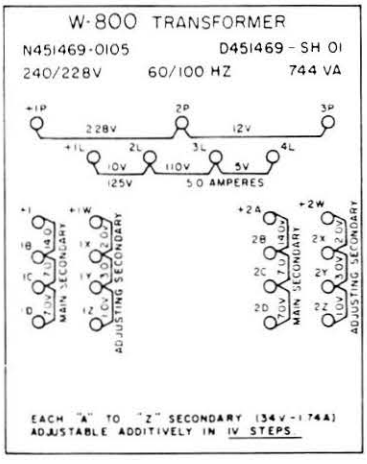

N451469-0105

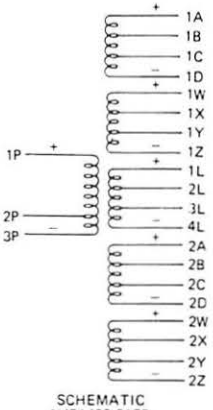

SCHEMATIC
N451469-0105

WIRING HARDWARE INCLUDED (QUANTITIES AS REQUIRED)

PART NO.	DESCRIPTION
J047818	Top Washer
M029101	Top Nut
M029103	Binding Nut
N143684	Jumper

TRAIN DETECTION SYSTEMS

TRACK CIRCUITS

Type "C" Track Circuits RSE-8C1
AFO-IIC Audio Frequency Overlay Equipment RSE-8D1
ATT-10 Audio Track Transceiver RSE-8D2
AFO-I Audio Frequency Overlay Equipment RSE-8D3
Surge-Ripple Filter RSE-8D4
AF-200W Audio Frequency Transit T. C. System RSE-8D5
High Frequency Track Circuit (Yard Application) RSE-8E1
AW-10 Directional Area Warning Device (Grade Cross.) RSE-8E2
FR-HI Shunt Track Circuit (Yard Application) RSE-8F1

DETECTION EQUIPMENT

SRD-5 Self Restoring Dragging Equipment Detector. RSE-8G1
WD-30 and WD-30D Wheel Detectors RSE-8H1
ACCUTECT Wheel Detector RSE-8H2
MM-25 Motion Monitor Track Circuit RSE-8J1
PM-10 Presence Monitor RSE-8J2
Electrocoder EC-10 Code Generator RSE-8K2
Impedance Bonds, AC and DC RSE-8M1

AFO-IIC AUDIO FREQUENCY OVERLAY TRACK CIRCUIT EQUIPMENT

The US&S AFO-IIC track circuit system is designed to provide train detection in territories without insulated joints. It represents the latest development in US&S's highly reliable series of AFO-II systems. AFO-IIC offers even greater flexibility in track circuit selection than before, and incorporates design improvements that further enhance compatibility with other track circuit equipment.

DESCRIPTION

AFO-IIC transmitters and receivers are directly interchangeable and compatible with existing AFO-II and AFO-IIB equipment. The AFO-IIC, however, provides two major advantages:

FREQUENCY SELECTION - AFO-IIC equipment offers an unlimited range of frequencies between 800 and 5000 Hz. This allows greater flexibility in applying new or replacement AFO in territories where frequency compatibility with other overlay equipment is required.

IMPROVED MODULATION - AFO-IIC uses sine wave modulation of the carrier frequency, rather than the square wave of previous systems. This reduces harmonic noise applied to the track, and minimizes interference to other equipment.

The AFO-IIC series includes a transmitter and a receiver. Each consists of a sheet steel enclosure, with printed circuit board(s) attached to the top cover for ease of maintenance. Standard AAR terminals are provided on both units for external connections. The receiver includes a screwdriver-adjustable sensitivity control. Both units are designed for shelf, wall or rack mounting using standard mounting hardware.

SPECIFICATIONS

TRANSMITTER

Input Voltage:	9.9 to 16.2 Vdc
Input Current:	.40 amp
Output Voltage:	5.0 V P-P
Output Impedance:	1 ohm
Operating Frequencies	See unit tabulation on back
Temperature Range:	-40° to +70°C

RECEIVER

Input Voltage:	9.9 to 16.2 Vdc
Input Current:	.07 amp
Output Voltage (400 ohm relay):	5.5 Vdc
Signal Sensitivity:	5 mV RMS, minimum
Input Impedance:	1.25 ohm
Bandwidth:	3db @ + 4.0% of assigned frequency
Operating Frequencies:	See unit tabulation on back
Temperature Range:	-40° to +70°C

TYPICAL AFO-IIC UNIT

FEATURES

- No insulated rail joints required; two AFO-IIC track replace the conventional three track circuit scheme.
- Versatile - provides any frequency between 800 and 5000 Hz.
- Easy to install; requires only one field calibration.
- Sine wave modulated carrier frequency reduces harmonic noise on the track, minimizes interference to other equipment.
- Compatible with motion detection equipment, existing AFO and dc track circuits.
- Easily accessed and replaced printed circuit boards
- Built-in surge protection and reverse polarity protection.
- Reliable and economical - meets or exceeds AAR requirements.

IMPORTANT

If planning a new installation using the AFO-IIC system, consult your nearest US&S Sales Representative, or request Service Manual 6134 before ordering any equipment. AFO-IIC installations require careful analysis of track circuit configuration, frequency assignments, possible audio frequency interference sources etc. This analysis is essential to development of a safe and reliable AFO-IIC system.

PRINTED IN USA

UNION SWITCH & SIGNAL DIVISION
AMERICAN STANDARD INC. / PITTSBURGH, PA 15237

COPYRIGHT 1986, US&S DIVISION OF AMERICAN STANDARD INC.

RSE-8D1
REV. 6/86

AFO-IIC RECEIVERS AND AFO-IIC TRANSMITTERS

FREQ. RANGE (Hz †)		AFO-IIC TRANS-MITTER N451052-	AFO-IIC RECEIVER N451052-	TRACK COUPLING UNITS‡ N451052-			
CARRIER	MOD.			GROUP 1	GROUP 2	GROUP 3	GROUP 4
870	18	2965	3165	--	--	1903	--
885	18	2966	3166	1901	--	--	--
930	18	2967	3167	--	1902	--	--
945	18	2968	3168	--	--	--	1904
980	22	2969	3169	--	--	1903	--
1050	22	2970	3170	1901	--	--	--
1120	22	2971	3171	--	1902	--	--
1180	22	2972	3172	--	--	1903	--
1215	22	2973	3173	--	--	--	1904
1285	27	2974	3174	--	--	1903	--
1330	27	2975	3175	1901	--	--	--
1420	27	2976	3176	--	1902	--	--
1520	27	2977	3177	--	--	--	1904
1660	27	2978	3178	--	--	1903	--
1860	39	2979	3179	1901	--	--	--
1945	39	2980	3180	--	--	1903	--
2140	39	2981	3181	--	1902	--	--
2365	49	2982	3182	--	--	--	1904
2540	49	2983	3183	1901	--	--	--
2720	49	2984	3184	--	1902	--	--
3360	68	2985	3185	1901	--	--	--
3410	68	2986	3186	--	1902	--	--
4565	94	2987	3187	--	--	--	--

† If a unit between 800 and 5000 Hz is desired, other than the ones listed above, order by stating AFO-IIC Transmitter or Receiver, N451052-XXXX, Carrier Frequency_____.

‡ When insulated joints are used, track coupling units are required.

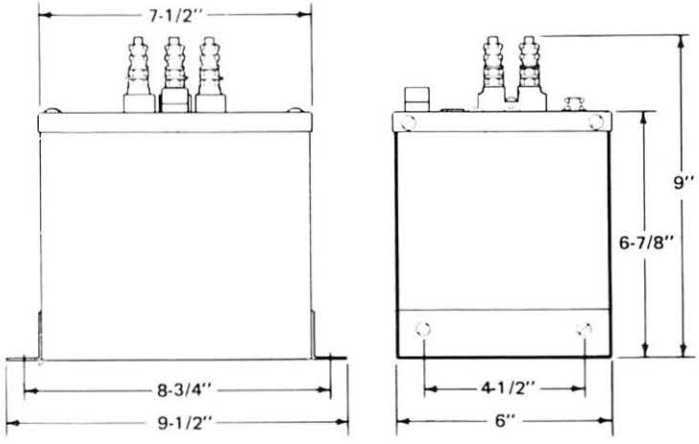

AUXILIARY EQUIPMENT

PART NO.	DESCRIPTION
N451036-0302	Blocking Reactor (Blocks all frequencies from 800 to 5000 Hz)
N451036-1701	Blocking Reactor (for certian Microcode applications)
N451036-0702	Surge Ripple Filter, 12 Vdc, 2.5 amps.
N322500-700	Track Relay, PN-150 (Recommended. Other types may be required depending on the application)
N451376-0302	Mounting Base, PN-150 Relay
N274069	Track Relay, DN-11B (Recommended. Other types may be required depending on the application)
N451552-0101	USG-A Arrester, L.V. w/o term. block
X451552-0301	USG-A Arrester, L.V. w/term. block
N451552-0201	USG-A Arrester, H.V. w/o term. block
X451552-0302	USG-A Arrester, H.V. w/term. block

MICROCODE-I AND MICROCODE-II

MICROPROCESSOR-BASED CODED TRACK CIRCUIT SYSTEMS

This catalog section provides ordering information for in-service MICROCODE-I and MICROCODE-II coded track circuit systems, to allow replacement of major components and expansion of these systems. Included are fully equipped cardfiles, PCBs, CPU board EPROMs, replacement cardfiles (without boards), the MICROCODE Wrap-Around unit and blocking units. For new installations employing US&S's microprocessor-based coded track circuit systems, contact US&S Sales.

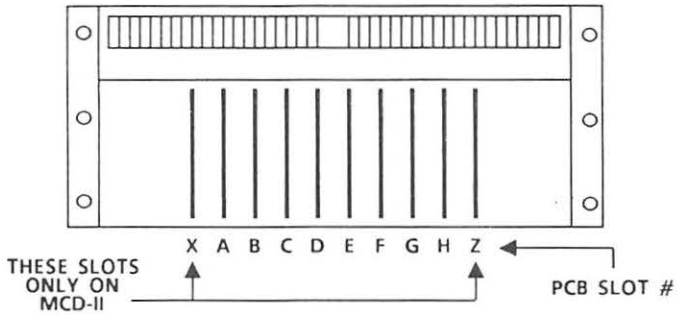

PART NO.	DESCRIPTION														
	TYPE*	RELAY I/O	PCBS N451204- (SLOT #)										CPU PCB EPROM N451575-		EMPTY CARDFILE N451082-
			X	A	B	C	D	E	F	G	H	Z	IC9	IC10	
N451082-2601	MCD-I, dual function	5 inputs, 5 outputs per side	N/A	3001	--	1301	1401	1201	1301	--	3001	N/A	0338	0339	2605
N451082-2603	MCD-I, single function	5 inputs, 5 outputs Master xmit side	N/A	3001	--	1301	1401	1201	3101	--	--	N/A	0338	0339	2605
N451082-2603	MCD-I, single function	5 inputs, 5 outputs Slave xmit side	N/A	--	--	3101	1401	1201	1301	--	3001	N/A	0338	0339	2605
N451082-2606	MCD-I, repeater	None	N/A	3001	--	--	--	1201	--	--	3001	N/A	1006	1007	2607
N451082-2701	MCD-I, C.L. stick, dual function	10 inputs, 10 outputs per side	N/A	3001	1301	1301	1401	3301	1301	1301	3001	N/A	0606	0607	2605
N451082-2702	MCD-I, S.L. stick, dual function	10 inputs, 10 outputs per side	N/A	3001	1301	1301	3501	3301	1301	1301	3001	N/A	0606	0607	2605
N451082-3901	MCD-II, dual function	5 inputs, 5 outputs per side	3702	3801	--	3601	3501	3301	3601	--	3801	3702	0610	0611	3909
N451082-3903	MCD-II, single function	5 inputs, 5 outputs Master xmit side	3702	3801	--	3601	3501	3301	3102	--	--	--	0610	0611	3909
N451082-3903	MCD-II, single function	5 inputs, 5 outputs Slave xmit side	--	--	--	3102	3501	3301	3601	--	3801	3702	0610	0611	3909
N451082-3906	MCD-II repeater	None	3702	3801	--	--	--	3301	--	--	3801	3702	0612	0613	3908
N451082-3910	MCD-II C.L. stick, dual function	10 inputs, 10 outputs per side	4001	3801	3601	3601	3501	3301	3601	3601	3801	4001	0618	0619	3909
N451082-3920	MCD-II, S.L. stick, dual function	10 inputs, 10 outputs per side	3701	3801	3801	3601	3501	3301	3601	3801	3801	3701	0614	0615	3909

* "MCD-I" = MICROCODE-I "MCD-II" = MICROCODE-II "C. L." = Color Light "S. L." = Searchlight

COPYRIGHT 1988, UNION SWITCH & SIGNAL INC.

MICROCODE WRAP-AROUND UNIT

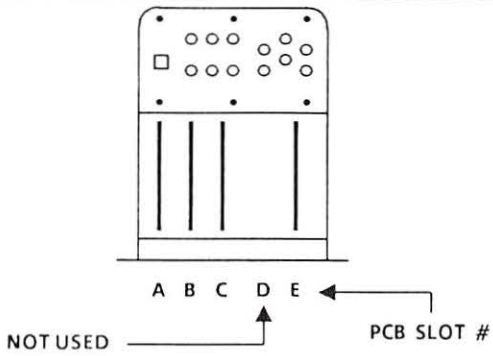

PART NO.	DESCRIPTION				
	PCBS N451204- (SLOT #)				EMPTY CARDFILE
	A	B	C	E	
N451082-3101	-3401	-1301	-1201	-1401	J709609

PLUG-IN PRINTED CIRCUIT BOARDS

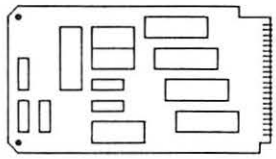

PART NO. N451204-	NAME	APPLICATIONS
1201	CPU	MICROCODE-I: 2601, 2603, 2606. MICROCODE Wrap Around unit.
1301	Logic I/O	MICROCODE-I: All. MICROCODE Wrap Around unit.
1401	CPS (Conditional Power Supply)	MICROCODE-I: 2601, 2603, 2701. MICROCODE Wrap Around unit.
3001	Track I/O	MICROCODE-I: All
3101	Mini-Driver	MICROCODE-I: 2603
3102	Mini-Driver	MICROCODE-II: 3903
3301	CPU	MICROCODE-I: 2701, 2702. MICROCODE-II: All
3401	Wrap-Around Receiver	MICROCODE Wrap Around unit.
3501	CPS (Conditional Power Supply)	MICROCODE-I: 2702 MICROCODE-II: 3901, 3903, 3910, 3920
3601	Bi-Polar Logic I/O	MICROCODE-II: 3901, 3903, 3910, 3920
3701	Surge Suppression	MICROCODE-II: 3920
3702	Surge Suppression	MICROCODE-II: 3901, 3903, 3906
3801	Track I/O With Reset	MICROCODE-II: All
4001	Surge Suppression	MICROCODE-II: 3910

BLOCKING UNIT

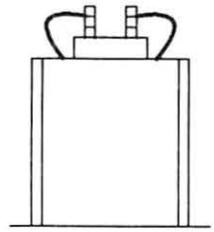

PART NO. N451557-	FREQ. (HZ)	PART NO. N451557-	FREQ. (HZ)
0601	156	0627	500
0602	211	0628	522
0603	285	0629	539
0604	348	0630	560
0605	430	0631	570
0606	525	0632	600.9
0607	645	0633	618
0608	151	0634	630
0609	163	0635	669.9
0610	207	0636	686
0611	210	0637	700
0612	226	0638	746.8
0613	230	0639	753
0614	267	0640	760
0615	280	0641	790
0616	301	0642	816
0617	313	0643	832.5
0618	326	0644	881
0619	349	0645	885
0620	389	0646	900
0621	390	0647	928.1
0622	392	0648	930
0623	405	0649	936
0624	433.7	0650	970
0625	452	0651	979
0626	483.5		

AF TRANSIT TRACK CIRCUIT SYSTEMS

US&S'S Audio Frequency (AF) Transit Track Circuit Systems provide vehicle detection and cab signal controls in dc propulsion territory. These advanced solid state systems have been installed in numerous domestic and international transit properties, and have demonstrated a high level of reliability. AF Track Circuit equipment can be precisely tailored to the customer's requirements, and is compatible with equipment from other suppliers. A wide range of cab signal indications or speed commands is available. The modular design of AF systems permits development of a vehicle-detecting system only, or one with expanded cab signaling capabilities.

DESCRIPTION

AF Track Circuit systems continuously detect vehicle location within track circuit blocks or interlockings, and transmit speed command cab signals or other control information to the vehicle. Train detection (block occupancy) occurs continuously, while transmission of cab signals is controlled by logic circuits outside the AF system. The cab signal code rate to be transmitted is also determined by external logic circuits controlling vital relays, and is based on occupancy of other track circuits, civil speed restrictions, etc.

AF systems achieve continuous vehicle detection with a single-ended, double-rail, audio-frequency track circuit. Insulated joints are not required, except at interlockings or at locations where precise track circuit definition is needed. Some systems are compatible with chopper-controlled vehicles in dc territories, and all are compatible with cam-controlled vehicles. Also, broken rails can be detected with AF Track Circuits.

A basic AF Track Circuit system typically consists of a low-profile, 19 inch rack mount, printed circuit board card file, a tuned audio-frequency mini-bond and a vital relay. The card file services two adjacent track circuits, thus a file is needed for each pair of track circuits in the system. Each track circuit is managed by a fully independent set of circuit boards, or two sets per card file. For the vehicle detection functions, these boards provide such functions as generation of a continuous track occupancy signal, monitoring for the presence or absence of the occupancy signal, and control of the vital track-occupied relay. For the cab signal function, these boards provide such functions as generation of a modulated cab signal (i.e. speed command), and output of that signal to the rails and the vehicle's pick-up coils.

The AF mini-bond is required to interface the system signals to the rails. It is comprised of a transformer with two windings, a primary and a secondary. The primary winding is electrically connected to the rails, while the secondary is tuned to the cab signal and train detection frequencies.

The US&S PN-150B vital relay is typically used as the track occupancy relay in AF Track Circuit systems. This relay is equipped with a 400 ohm coil.

AF Track Circuit systems typically require one or more dedicated power supplies, depending on the particular system configuration.

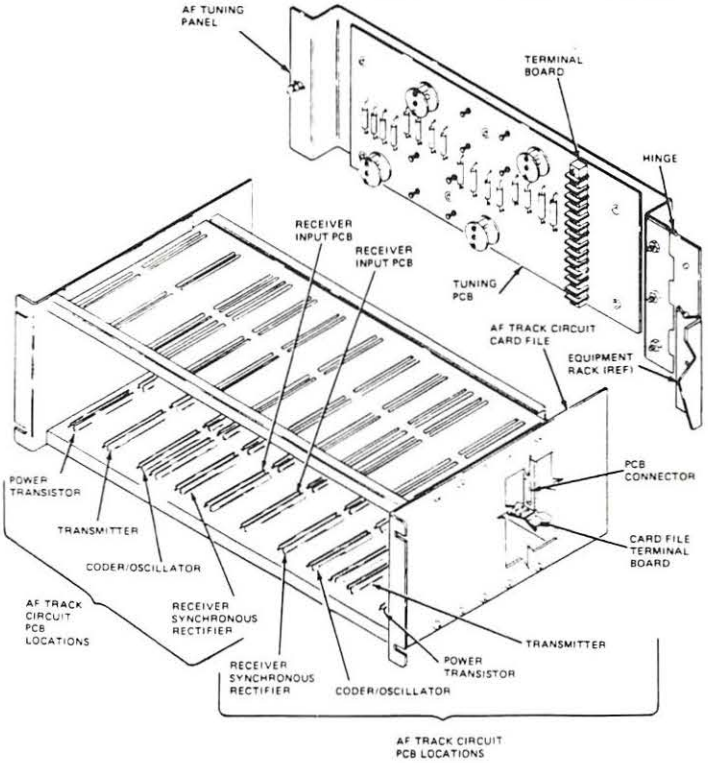

TYPICAL AF TRACK CIRCUIT CARD FILE

Basic specifications for AF systems already installed as of December, 1986 are shown on the back of this sheet. These are intended to show the adaptability of the basic system to a wide range of transit properties. New installations can be developed with different specifications, per customer order.

FEATURES

- Can be precisely tailored to most types of transit systems.
- Versatile - compatible with cam or chopper-controlled vehicles in dc territory.
- Compatible with other supplier's track circuit systems and equipment.
- State-of-the-art solid state electronics provide high reliability.
- Modular design permits train dectection configuration only, or detection and cab signal configurations.
- Plug-in printed circuit boards simplify maintenance, keep down-time to a minimum.

HOW TO ORDER

Because of the customizing required to integrate AF Track Circuit systems with specific transit properties, standard part numbers cannot be provided for system components. Contact US&S Sales for new installations using AF systems.

PRINTED IN USA

UNION SWITCH & SIGNAL DIVISION
AMERICAN STANDARD INC. / PITTSBURGH, PA 15237

COPYRIGHT 1986, US&S DIVISION OF AMERICAN STANDARD INC.

RSE-8D5
REV. 12/86

BASIC SPECIFICATIONS - AF TRANSIT TRACK CIRCUIT SYSTEMS INSTALLED AS OF 12/86

SYSTEM	AF NO.	MAX. T.C. LENGTH (FEET)	SHUNT SENS. (OHMS)	BOND RATING & UNBAL. (AMPS)	TRAIN DET. CARRIERS				CAB SIG. CARRIERS		CODE RATES	
					NO.	GROUPS	FREQUENCIES (HZ)		NO.	FREQUENCIES (HZ)	NO.	FREQUENCIES (HZ OR CPM)
Montreal Expo	--	2000	0.06	2000/200	11	2 Main 1 Aux.	Class 1 2550 2730 3270 3810 4170 Aux.	Class 2 2490 2670 3210 4110 5190 6090	2	990 1170	2	7.5 10
MBTA	AF-200W	1000	0.06	2000/200	4	1	1590 2670 3870 5190		1	990	7	5.0 13.6 6.6 16.8 8.6 20.4 10.8
Bucharest Metro	AF-300	1150	0.25	2000/200	4	1	1575 2375 3525 5325		1	975	6 2	Cab (CPM): 48 184 72 276 123 420 Train Det.: 11.2 16.2
BRRTS and MDCRTS	AF-400	1250	0.2	3000/300	4	1	1590 2670 3870 5190		1	990	6 2	Cab: 5.0 10.8 6.6 13.6 8.6 16.8 Special Purpose: 20.4 27.5
Seoul Metro	AF-400A	1200	0.06	3000/300	4	1	1590 2670 3870 5190		1	990	7	3.2 10.8 5.0 13.6 6.6 16.8 8.6
CTA, O'Hare Ext.	AF-500	1500	0.06	3000/240	8	2	Grp. 1 1900 2820 3370 3900	Grp. 2 2100 2580 3100 3660	1	4550	6	(CPM:) 75 270 120 648 180 410
MARTA	AF-600	1550	0.25	2500/250	8	2	Grp. 1 2970 3510 3870 4410	Grp. 2 3330 3690 4230 4950	1	2340	6 1	Cab: 3.0 10.0 4.5 15.3 6.8 21.5 Train Det.: 7.8
GCRTA	AF-700	1550	0.20	3000/300	4	1	2590 2970 3690 3870		1	4550	6 2	Cab (CPM): 75 270 120 410 180 648 Train Det.: 8.6 11.7

SRD-5 SELF—RESTORING DRAGGING EQUIPMENT DETECTOR

The SRD-5 Self-Restoring Dragging Equipment Detector is a compact, integral device designed to mount directly on standard length ties. (No tie framing is needed.) The detector is arranged to operate with traffic in either direction and provides continues automatic operation without the need for replacing the detecting element after each operation.

The SRD-5 can be used at approaching interlockings, tunnels, bridges, or other locations to detect any defective equipment that might possibly be hanging beneath cars or locomotives that could cause damage or derailment. Another application is at car inspection pits in classification yards, where it is used to warn inspectors of such defects on appoaching cars.

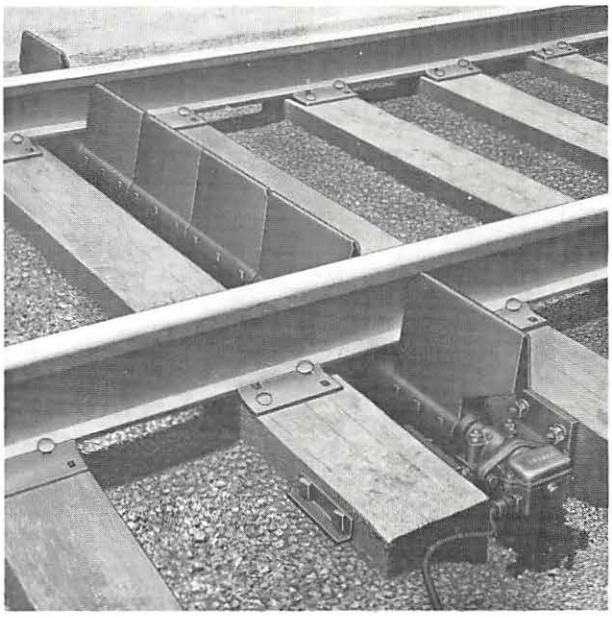

DESCRIPTION

Dragging equipment is detected by means of V-shaped plates mounted vertically between the rails and outside the rails for a sufficient distance to cover maximum car truck width. When struck by dragging equipment, the plates are deflected (i.e., rotated) in either direction and resultant rotation of the shaft operates the circuit controller contact to set wayside signals to warn enginemen. A spring-type restoring mechanism automatically returns both the detector plates and the circuit controller contact to their normal positions immediately after each operation, thus placing the detector in condition to check the next train. The torque characteristics of the detector can be readily adjusted to suit requirements of the particular installation.

The detector is ruggedly constructed to withstand the severe conditions of shock and vibration encountered in service. All operating parts are protected by weatherproof housings. Resilient mountings for the bearings are utilized to minimize shock caused by passing trains. Maintenance is simplified since no adjustments are normally required, and the refilling of two grease fittings is the only attention necessary.

Since only the plates of the SRD-5 Dragging Equipment Detector project above the top of the ties, it is necessary to remove only the plates and to protect the cable to clear ballast cleaning equipment.

The circuit controller comprises one heavy-duty silver-to-silver normally closed contact enclosed in a rugged housing which bolts directly to one of the bearing blocks. The circuit controller shaft is carried on substantial Oilite bushings, which simplifies lubrication. A waterproof cable fitting and a two conductor #14 flexible cable approximately 6 feet long are furnished for making circuit connections. Provision is made for applying the cable fitting to either side of the controller housing to suit installation requirements. A gasketed cover provides ready access to the circuit controller compartment for inspecting the contact assembly and circuit connections.

COPYRIGHT 1986, US&S DIVISION OF AMERICAN STANDARD INC.

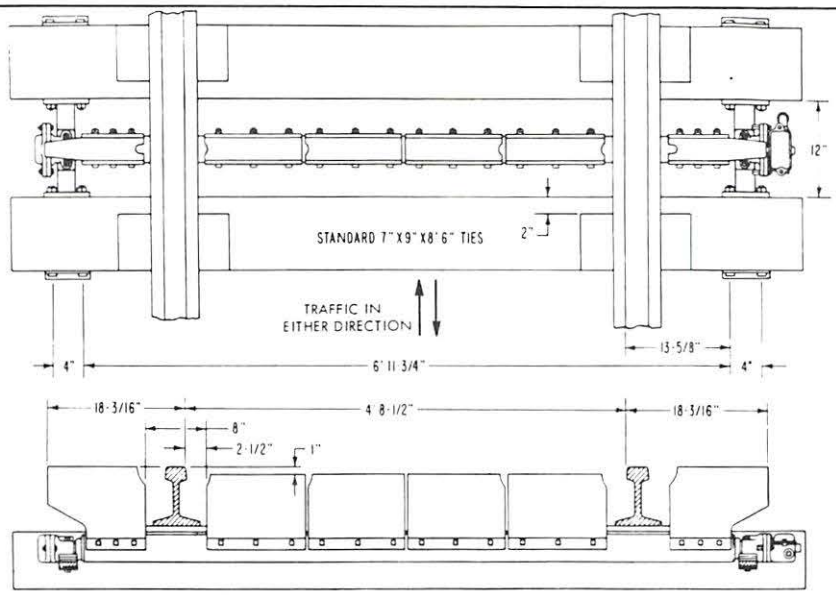

VIEW W - STANDARD FOR MAIN LINE USE

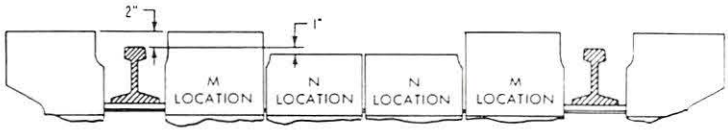

VIEW X - STANDARD FOR CLASSIFICATION YARDS

		PER VIEW "W"	PER VIEW "X"		
KIT PART NO.	HEIGHT OF OUTSIDE DET. PLATES	HEIGHT OF INSIDE DET. PLATES	HEIGHT OF INSIDE DET. PLATES "M"	HEIGHT OF INSIDE DET. PLATES "N"	COMMENTS
X289704-001*	11-5/16"		11-5/16"	8-7/16"	Use with 130# R.E.H.F rail, and 15/16" thick tie plate. Detector switch contact normally closed.
X289704-002*	9-7/16"	8-7/16"			Use with 131# P.S., 140# P.S., 131# R.E., 132# R.E., 133# R.E., 132# H.F., 136# C.F. & I. rail, and 29/32", 15/16", 7/8" 27/32" thick tie plates. Detector switch contact normally closed.
X289704-003*	8-3/4"	7-3/4"			Use with 112# R.E., 115# R.E., 130# R.E., 112# T.R., 130# P.S. rail, 5/8" to 7/8" thick tie plates. Detector switch contact normally closed.
X289704-004*	11-5/16"		11-5/16"	8-7/16"	Use with 129# T.R., 131# R.E., 132# R.E., 132# H.F., 136# C.F. & I., 140# P.S. rail, 5/8" to 15/16" thick tie plates. Detector switch contact normally closed.
X289704-005*	8-15/16"	7-15/16"			Use with 113# H.F., 119# R.E. rail, 25/32" to 7/8" thick tie plate. Detector switch contact normally closed.
X289704-006*	9-1/8"		9-1/8"	6-1/8"	Use with 82# Aus. rail, 7/16" thick tie plate. Detector switch contact normally closed.
N376941 X376548-001					Optional junction box. Optional cable.

*All kits include complete detector mechanism assembly, mounting hardware, torque adjustment tool, detector plates and service manual. Contact your nearest US&S Sales office for detectors with normally open switch contacts.

CS-II EQUIPMENT CASES

Union Switch & Signal's CS-II Equipment Cases provide increased versatility and easier installation. They have been designed for greater strength and better weatherproofing properties to protect your equipment.

TYPICAL CS-II EQUIPMENT CASE

DESCRIPTION

CS-II Equipment Cases are constructed of Cor-Ten* steel. Cor-Ten is highly resistive to rust and atmospheric corrosion and is 40% stronger than mild steel. Due to the unique character of Cor-Ten, the cases need not be painted. When painting is specified, the exterior is painted aluminum and the interior is painted grey enamel.

Full size locking doors are provided front and back, have heavy duty handles, screened air vents and sturdy hinges. A retaining rod holds the door open in the 90 degree position.

Shelving brackets are welded to the side of the case. They are of the slip-in buttonhole type for easy shelf placement. Shelves can be positioned in vertical increments of 3" with a minimum distance of 6" between shelves. Front shelves are 12" deep, rear shelves 10" deep.

FEATURES

- Cor-Ten steel provides resistance from atmospheric corrosion three to five times better than conventionally used mild steel. Yield strength is 40% greater than mild steel.
- Backboard may be mounted 14" offset from the front, or in the center of the case.
- Shelves are easily installed by use of "button-hole" arrangement, and height is adjustable in 3" increments.
- Plug-in relay bars can be spaced to accommodate both US&S and relays of other manufacturers.
- Lifting eyes are provided for easier handling.
- Bolting is external using slotted flanges.
- Wide doors maximize utilization of interior space. Both front and back doors are secured with heavy duty handles, have screened vents, and can be latched in the 90° open position. Three point latching is provided on all high cases.
- Door gaskets have been improved to provide long life sealing from weather and dust.
- Knockouts are provided for both aerial and parkway cables. Rectangular cable chute knockouts are also available.

** COR-TEN is a registered trade name of U. S. Steel Corp.*

COPYRIGHT 1986 US&S DIVISION OF AMERICAN STANDARD INC

SE MOUNTING	17-1/2" EQUIPMENT CASES	POLE MOUNTING

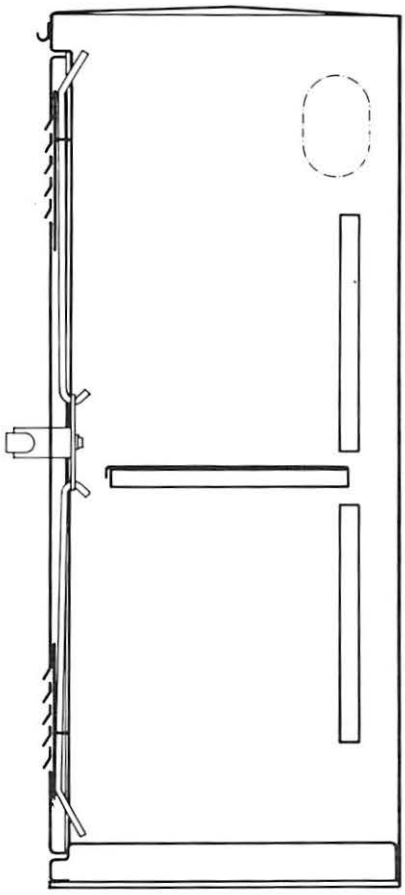

PART NO.	DESCRIPTION
N451585-0601	CASE, painted
N451585-0602	CASE, unpainted
N451585-0603	CASE, painted, with shelf, backboard and mounting hardware
N451585-0604	CASE, unpainted, with shelf, backboard and mounting hardware

FITTING AND FOUNDATION

PART NO.	DESCRIPTION
M217035-001	SHELF (Order separately)
J792538	CONCRETE FOUNDATION, precast, 2 pieces

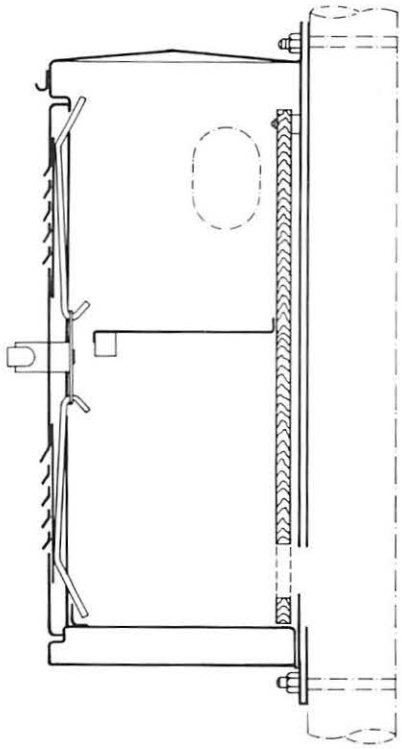

PART NO.	N451585-0701

FITTINGS

PART NO.	DESCRIPTION
M297544	U-BOLT, 1/2" for 3", 3-1/2" and 4" pipe masts
J048013	NUT, hex, 1/2", for U-bolt
J047769	WASHER 1/2", galvanized, for 4" steel pipe mast
J480210-0105	NUT, hex, 1/2", for galvanized U-bolt
J475138-0115	WASHER 1/2", for galvanized U-bolt

CS-II EQUIPMENT CASES

Union Switch & Signal's CS-II Equipment Cases provide increased versatility and easier installation. They have been designed for greater strength and better weatherproofing properties to protect your equipment.

TYPICAL CS-II EQUIPMENT CASE

DESCRIPTION

CS-II Equipment Cases are constructed of Cor-Ten* steel. Cor-Ten is highly resistive to rust and atmospheric corrosion and is 40% stronger than mild steel. Due to the unique character of Cor-Ten, the cases need not be painted. When painting is specified, the exterior is painted aluminum and the interior is painted grey enamel.

Full size locking doors are provided front and back, have heavy duty handles, screened air vents and sturdy hinges. A retaining rod holds the door open in the 90 degree position.

Shelving brackets are welded to the side of the case. They are of the slip-in buttonhole type for easy shelf placement. Shelves can be positioned in vertical increments of 3" with a minimum distance of 6" between shelves. Front shelves are 12" deep, rear shelves 10" deep.

FEATURES

- Cor-Ten steel provides resistance from atmospheric corrosion three to five times better than conventionally used mild steel. Yield strength is 40% greater than mild steel.
- Backboard may be mounted 14" offset from the front, or in the center of the case.
- Shelves are easily installed by use of "button-hole" arrangement, and height is adjustable in 3" increments.
- Plug-in relay bars can be spaced to accommodate both US&S and relays of other manufacturers.
- Lifting eyes are provided for easier handling.
- Bolting is external using slotted flanges.
- Wide doors maximize utilization of interior space. Both front and back doors are secured with heavy duty handles, have screened vents, and can be latched in the 90° open position. Three point latching is provided on all high cases.
- Door gaskets have been improved to provide long life sealing from weather and dust.
- Knockouts are provided for both aerial and parkway cables. Rectangular cable chute knockouts are also available.

** COR-TEN is a registered trade name of U. S. Steel Corp.*

PRINTED IN USA

UNION SWITCH & SIGNAL DIVISION
AMERICAN STANDARD INC./ PITTSBURGH, PA 15237

RSE-9B1
REV. 6/86

COPYRIGHT 1986 US&S DIVISION OF AMERICAN STANDARD INC

Tagboards with wire chases and relay mounting bars may also be fastened to the shelf brackets.

Either a full or half backboard is available. Backboards may be mounted centrally in the case for mounting equipment in both the front and back or off-center providing more space toward the front.

Figures below illustrate shelf, backboard, and relay mounting bar arrangements.

Aerial knockouts are provided at the top of the side panels for cable entry. Bases are available with circular or rectangular knockouts for parkway cable entry. Aerial cable fittings and parkway cable chutes are available as options. See ordering information.

US&S also offers a 17½" wide case for housing a small quantity of equipment or for use as a terminal case. It is designed for pole mounting on 3", 3½", and 4" pipe posts,or for use with steel piers or concrete foundations. The pole mounted case is 30" in height and the foundation mounted case is 44" high. The pole mounted case has one aerial knockout located near the top, while the base mounted case has one base cable knockout. Both cases accommodate one shelf.

INSTALLATION

CS-II Equipment Cases require only simple four corner mounting. Ploe mounting is an option with the 17½" case (see page 6). US&S provides a variety of easily assembled steel and concrete foundation piers for different terrain conditions. Where the customer provides his own foundation supports, dimensions for foundation bolt spacing are given on page 8.

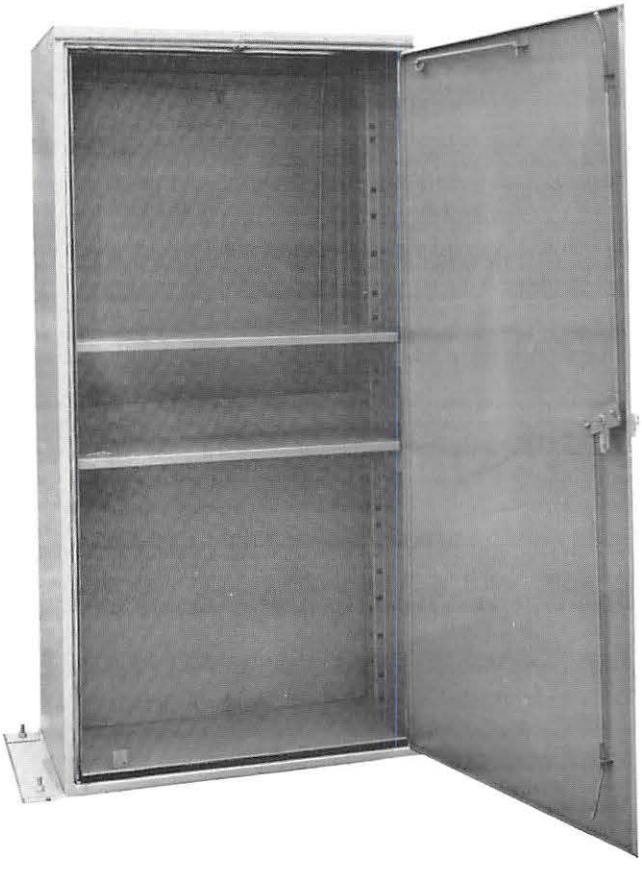

TYPICAL CASE WITH HALF BACKBOARD AND TWO FRONT SHELVES

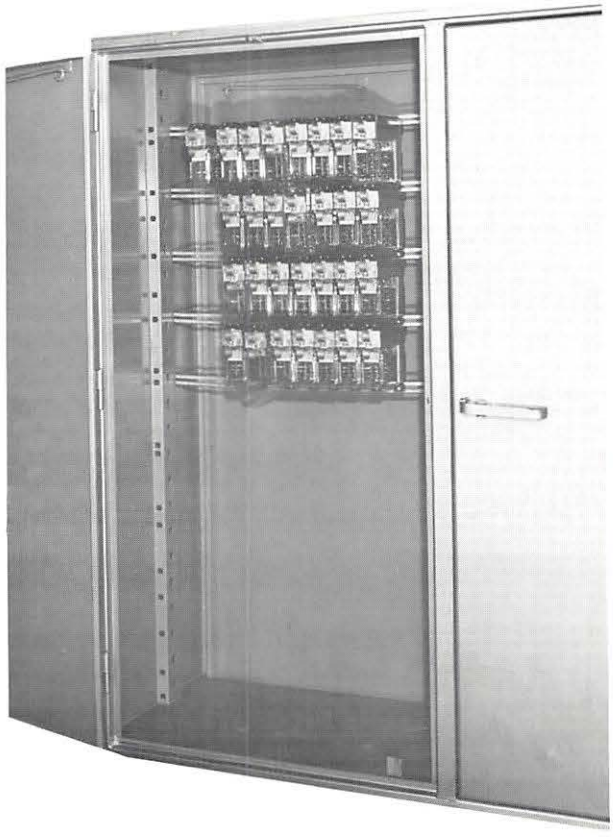

TYPICAL CASE WITH RELAY MOUNTING BARS AND PLUG-IN relays

FACTORY WIRING

Factory wiring can be provided for customers who prefer. A number of wiring arrangements are available. Please contact your US&S representative for ordering information.

SIZES AVAILABLE

The following table outlines all the available sizes of CS-II Equipment Cases.

CASE	CASE HEIGHT	CASE WIDTH	CASE DEPTH	DOOR OPENING	DOOR HEIGHT	NO. OF DOORS
3'2" LOW	49-3/8"	3'2"	24"	36"	45-7/8"	1 FR. 1 BK.
3'2" HIGH	6'6"	3'2"	24"	36"	6'2-1/2"	1 FR. 1 BK.
4'10" HIGH	6'6"	4'10"	24"	56"	6'2-1/2"	2 FR. 2 BK.
6'4" HIGH	6'6"	6'4"	24"	36"	6'2-1/2"	2 FR. 2 BK.
9'8" HIGH	6'6"	9'8"	24"	56"	6'2-1/2"	4 FR. 4 BK.
17-1/2" POLE MTD.	30-1/2"	17-1/2"	13"	15-1/2"	27-5/16"	1 FR.
17-1/2" BASE MTD.	44"	17-1/2"	18"	15-1/2"	40-1/2"	1 FR.

BASE KNOCKOUT ARRANGEMENTS

CS-II Equipment Cases are available with open rectangular slots (dotted) or circular knockouts as illustrated below. Specify your choice when ordering.

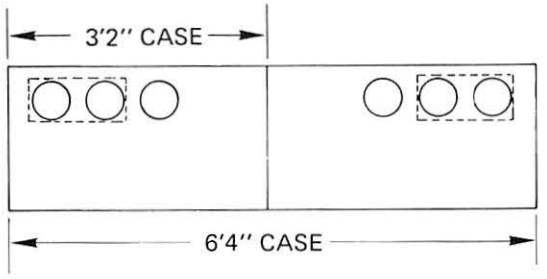

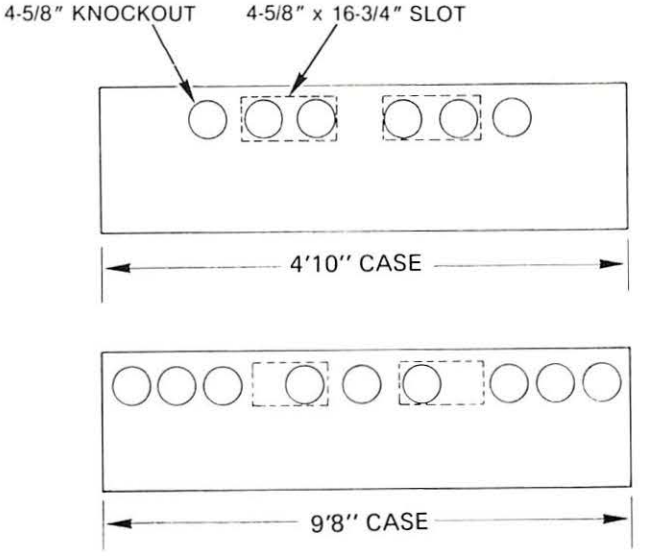

CS-II EQUIPMENT CASES

ORDERING INFORMATION

Equipment Cases are available in numerous sizes to accommodate your equipment requirements. All cases are supplied empty; shelves, backboards, etc., must be ordered separately. Refer to the tabulations following, specifying by part number and description the size case and the configuration desired. Order any accessories by part number and description. Fittings and miscellaneous items used with CS-II Equipment Cases are listed on following pages.

BASIC EQUIPMENT CASE

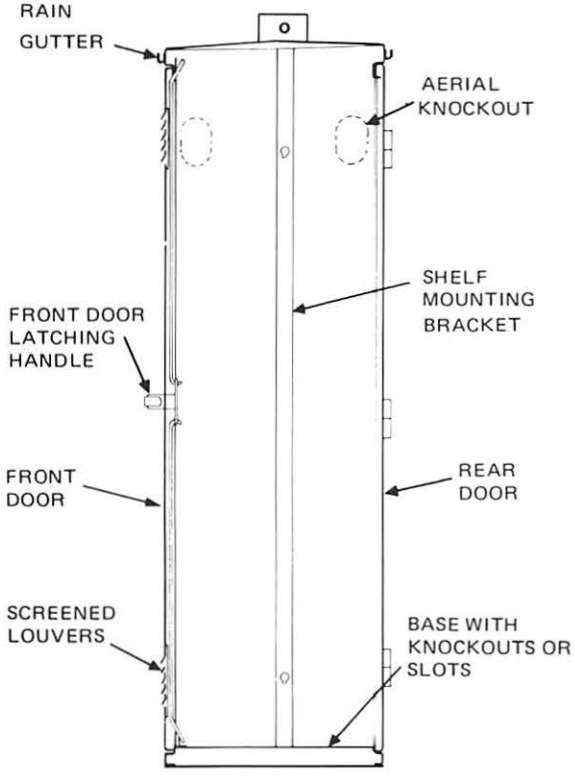

EQUIPMENT CASE SHOWN WITH AVAILABLE OPTIONS

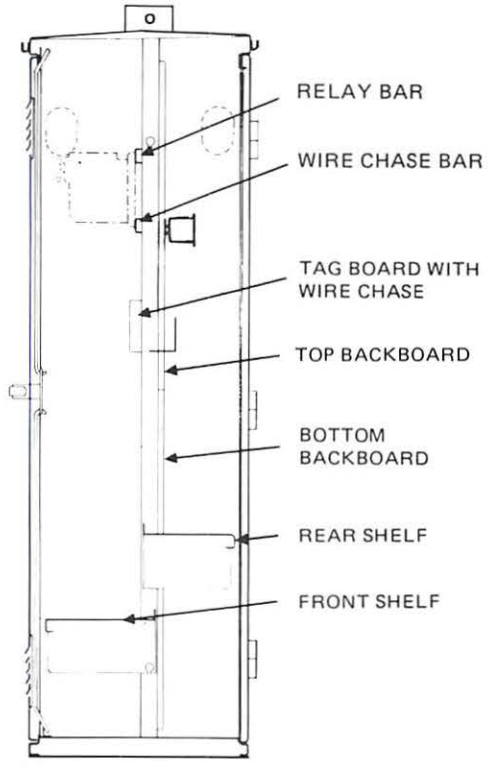

CS-II LOW (4' 1-3/8'') EQUIPMENT CASES

3'2'' WIDE X 4'1-3/8'' HIGH CASE

PART NO. N451585-	DESCRIPTION
0501	CASE, PAINTED with circular knockout base.
0502	CASE, PAINTED with open rectangular slot base.
0504	CASE UNPAINTED with open rectangular slot base.

ACCESSORIES

PART NO.	DESCRIPTION
N451586-6002	BACKBOARD, FULL
N451586-2603	SHELF, FRONT (12'' deep)
N451586-2703	SHELF, REAR (10'' deep)
X451586-5301	TAG BOARD, with wire chase and mounting hardware.
X451586-5403	RELAY BAR, with mounting hardware.
X451586-6101	WIRE CHASE BAR, with chase & hardware.
M451586-5901	BATTERY BOARD (not shown)

CS-II HIGH EQUIPMENT CASES

3'2'' WIDE X 6'6'' HIGH CASE

PART NO. N451585-	DESCRIPTION
0101	CASE, PAINTED with circular knockout base.
0102	CASE, PAINTED with open rectangular slot base.
0103	CASE UNPAINTED with open rectangular slot base.
0104	CASE, UNPAINTED with circular knockout base.

ACCESSORIES FOR 3'2'' WIDE CASE

PART NO.	DESCRIPTION
N451586-4803	BACKBOARD, FULL
N451586-4804	BACKBOARD, HALF
N451586-2603	SHELF, FRONT (12'' deep)
N451586-2703	SHELF, REAR (10'' deep)
X451586-5301	TAG BOARD, with wire chase and mounting hardware.
X451586-5403	RELAY BAR, with mounting hardware.
X451586-6101	WIRE CHASE BAR, with chase & hardware.
M451586-5901	BATTERY BOARD (not shown)

6'4'' WIDE X 6'6'' HIGH CASE

PART NO. N451585-	DESCRIPTION
0201	CASE, PAINTED with circular knockout base.
0202	CASE, PAINTED with open rectangular slot base.
0204	CASE, UNPAINTED with open rectangular slot base.

ACCESSORIES FOR 6'4'' WIDE CASE

PART NO.	DESCRIPTION
N451586-4803*	BACKBOARD, FULL
N451586-4804*	BACKBOARD, HALF
N451586-2603*	SHELF, FRONT (12'' deep)
N451586-2703*	SHELF, REAR (10'' deep)
X451586-5302	TAG BOARD, with wire chase and mounting hardware.
X451586-5403*	RELAY BAR, with mounting hardware.
X451586-6101*	WIRE CHASE BAR, with chase & hardware.
M451586-5901	BATTERY BOARD (not shown)

*2 required for full width of case.

4'10'' WIDE X 6'6'' HIGH CASE

PART NO. N451585-	DESCRIPTION
0301	CASE, PAINTED with circular knockout base.
0302	CASE, PAINTED with open rectangular slot base.
0304	CASE, UNPAINTED with open rectangular slot base.

ACCESSORIES FOR 4'10'' WIDE CASE

PART NO.	DESCRIPTION
N451586-4704	BACKBOARD, FULL, TOP
N451586-4705	BACKBOARD, FULL, BOTTOM
N451586-4706	BACKBOARD, HALF
N451586-2604	SHELF, FRONT (12'' deep)
N451586-2704	SHELF, REAR (10'' deep)
X451586-5303	TAG BOARD, with wire chase and mounting hardware.
X451586-5404	RELAY BAR, with mounting hardware.
X451586-6102	WIRE CHASE BAR, with chase & hardware.
M451586-5902	BATTERY BOARD (not shown)

9'8'' WIDE X 6'6'' HIGH CASE

PART NO. N451585-	DESCRIPTION
0401	CASE, PAINTED with circular knockout base.
0402	CASE, PAINTED with slot knockout base
0404	CASE, UNPAINTED with open rectangular slot base.

ACCESSORIES FOR 9'8'' WIDE CASE

PART NO.	DESCRIPTION
N451586-4704*	BACKBOARD, FULL, TOP
N451586-4705*	BACKBOARD,FULL, BOTTOM
N451586-4706*	BACKBOARD, HALF
N451586-2604*	SHELF, FRONT (12'' deep)
N451586-2704*	SHELF, REAR (10'' deep)
X451586-5304	TAG BOARD, with wire chase and mounting hardware.
X451586-5404*	RELAY BAR, with mounting hardware.
X451586-6102*	WIRE CHASE BAR, with chase & hardware.
M451586-5902	BATTERY BOARD (not shown)

*2 required for full width of case.

BASE MOUNTING	17-1/2" EQUIPMENT CASES	POLE MOUNTING

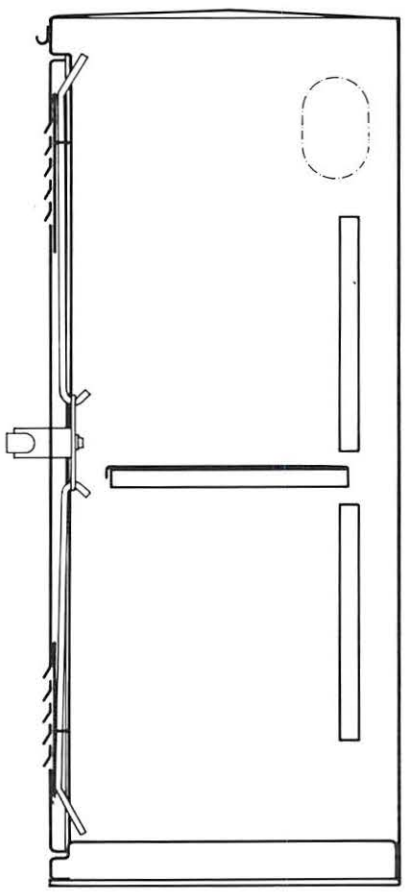

PART NO.	DESCRIPTION
N451585-0601	CASE, painted
N451585-0602	CASE, unpainted
N451585-0603	CASE, painted, with shelf, backboard and mounting hardware
N451585-0604	CASE, unpainted, with shelf, backboard and mounting hardware

FITTING AND FOUNDATION

PART NO.	DESCRIPTION
M217035-001	SHELF (Order separately)
J792538	CONCRETE FOUNDATION, precast, 2 pieces

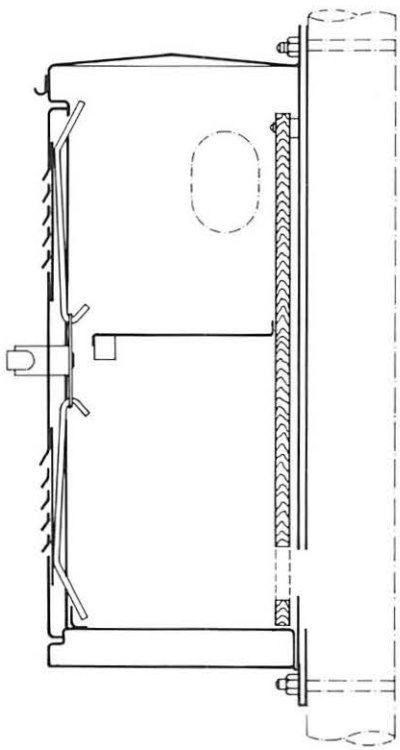

PART NO.	N451585-0701

FITTINGS

PART NO.	DESCRIPTION
M297544	U-BOLT, 1/2" for 3", 3-1/2" and 4" pipe masts
J048013	NUT, hex, 1/2", for U-bolt
J047769	WASHER 1/2", galvanized, for 4" steel pipe mast
J480210-0105	NUT, hex, 1/2", for galvanized U-bolt
J475138-0115	WASHER 1/2", for galvanized U-bolt

FITTINGS

AERIAL CABLE OUTLET
(10 sq.in. opening)

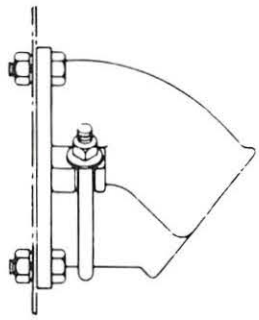

PART NO.
N192013

AERIAL CABLE OUTLET
(5.4 sq.in. opening)

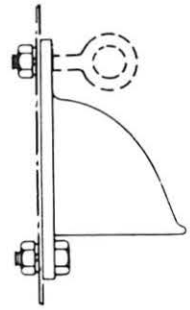

PART NO.
N292840

BASE CABLE OUTLET
(for circular knockout, 13 sq.in. opening)

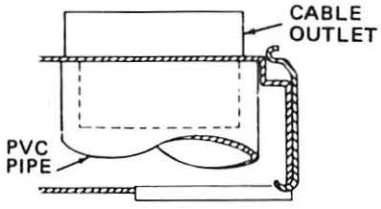

PART NO.	DESCRIPTION
M221710	Cable Outlet

CALL LIGHT
(complete with lamp)

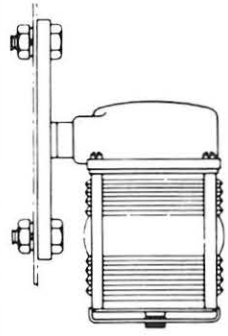

PART NO.	DESCRIPTION
X348470-002	Lamp, 11V - 11W
X348470-003	Lamp, 120V - 10W

EYEBOLT [For supporting cable such as at aerial cable outlet; misc. applications].

PART NO.	DESCRIPTION
M262665	Eyebolt
J048009	Nut

CABLE CHUTE (for cases with open rectangular slot)
(4-15/32"H x 16-5/8"W x 35-15/16"D)

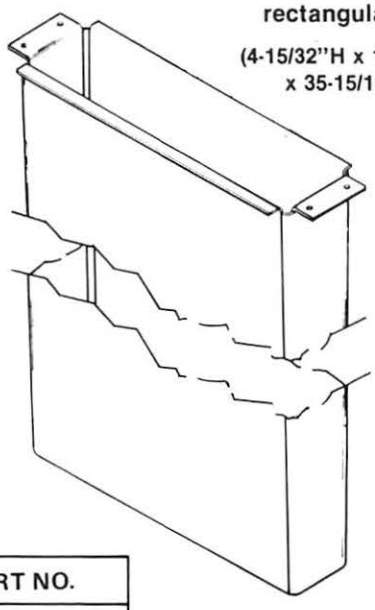

PART NO.
R451444-7301

GROUND TERMINAL

PART NO.
N318933

FOUNDATION BOLT

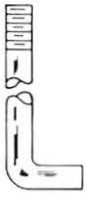

PART NO.	DESCRIPTION
M010478	"J" Bolt
J048026	Hex Nut
J047506	Washer

FITTINGS

CASE VENTILATION FAN: PART NO. X451443-3901 (KIT)

A thermostatically controlled, 144 cfm ventilation fan assembly is provided as an optional fixture for CS-II equipment cases where excessive heat is expected. The fan may be mounted internally on the aerial cable outlet bolts (see previous page), with the outlet housing serving as the ventilation duct (cable application dicarded). The following items are included in the X451443-3901 kit:

PART NO.	DESCRIPTION	PART NO.	DESCRIPTION
J792712	Blower/Fan	M229464	Cable Outlet
J620913	Thermostat	M451528-0601	Screen
R451014-8201	Utility Box	M451528-0501	Mounting Plate

FOUNDATION PIERS

US&S provides steel and finished concrete foundation piers for all CS-II Equipment Cases except the 17½" model (contact US&S for mounting of this case).

The steel version (refer to page 9 for ordering) utilizes heavy guage angle and plate welded into a single unit, and is available in 36" and 48" tall units. Two case mounting studs project from the top of each pier. Two piers and a steel spacer plate are required for all installations, but tie rods and associated hardware are no longer required. Spacer plate size varies with the case base dimensions (per customer requirement) and fastener hardware is provided for assembly with the piers. All components are hot-dip galvanized for corrosion resistance.

US&S offers two types of concrete foundation piers to adapt case installations to varying terrain (refer to page 10 for ordering). Both are fashioned from steel-reinforced concrete.

The 48" tall "I" pier is recommended for irregular terrain where deeper pier excavation is required. Two of these piers are used in all applications and no spacer section is required. Case mounting studs are cast into the bearing surface; washers and nuts are included when ordering this version.

The concrete "box" pier is available in 36" and 48" tall sections and is suitable for installations where minimal excavation is required. These piers can be installed in pairs for any CS-II Case installation, without a spacer support. However, such support is recommended and US&S provides a reinforced concrete spacer plate which is fastened vertically between the piers. Assembly is accomplished with separate fastener hardware, rather than cast-in studs. The spacer contains threaded inserts on the ends for securing bolts. All necessary fastener hardware is included with individual box piers and the 3-piece kits.

FOUNDATION BOLT SPACING

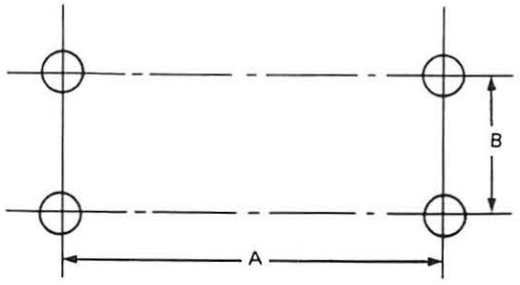

CASE	DIMENSION A	DIMENSION B
9'8"	10'0"	18½"
6'4"	6'8"	18½"
4'10"	5'2"	18½"
3'2"	3'6"	18½"
17½"	20"	15"

STEEL FOUNDATION PIERS

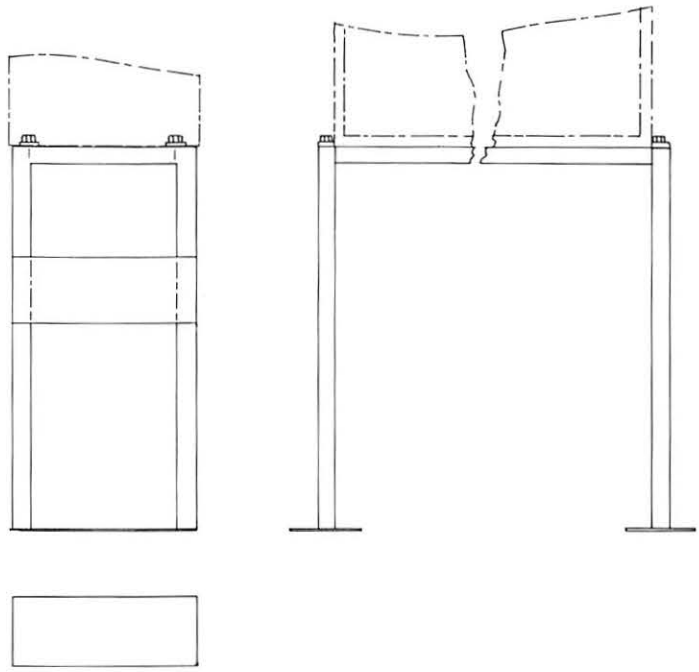

PIER ASSEMBLY KITS
(Includes two piers, one spacer plate and fasteners)

APPLICATION	PART NO.
36" HIGH ASSEMBLY FOR 3'-2" HIGH AND LOW CS-II CASES	X451586-6701
36" HIGH ASSEMBLY FOR 4'-10" CS-II CASE	X451586-6702
36" HIGH ASSEMBLY FOR 6'-4; CS-II CASE	X451586-6703
36" HIGH ASEMBLY FOR 9'-8" CASE	X451586-6704
48" HIGH ASSEMBLY FOR 3'-2" HIGH AND LOW CS-II CASES	X451586-6705
48" ASSEMBLY FOR 4'-10" CS-II CASE	X451586-6706
48" HIGH ASSEMBLY FOR 6'-4" CS-II CASE	X451586-6707
48" HIGH ASSEMBLY FOR 9'-8" CS-II CASE	X451586-6708

COMPONENTS

ITEM	PART NO.	ITEM	PART NO.
		6'-8" x 23" SPACER	J725887-0002
36" x 23" PIER	J792548	10' x 23" SPACER	J725887-0003
48" x 23" PIER	J792548-0001	HOLD-DOWN NUT (¾"-10)	J040026
3'-6" x 23" SPACER	J725887	WASHER (¾" Stl.)	J047506
5'-2" x 23" SPACER	J725887-0001	LOCK WASHER	J047772

CONCRETE FOUNDATION PIERS

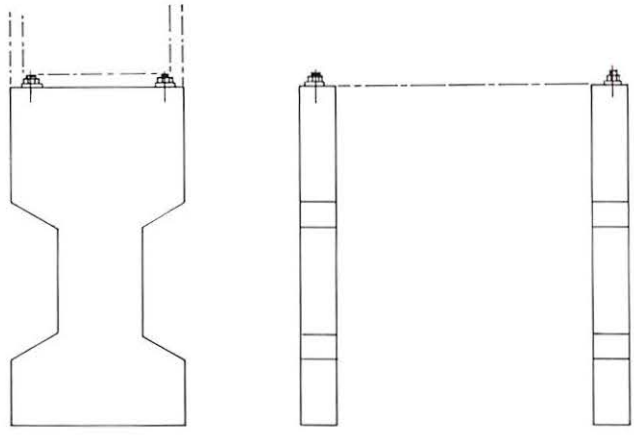

"I" CONCRETE PIER (Includes two nuts, washers)	
PART NO.	J792547-0001

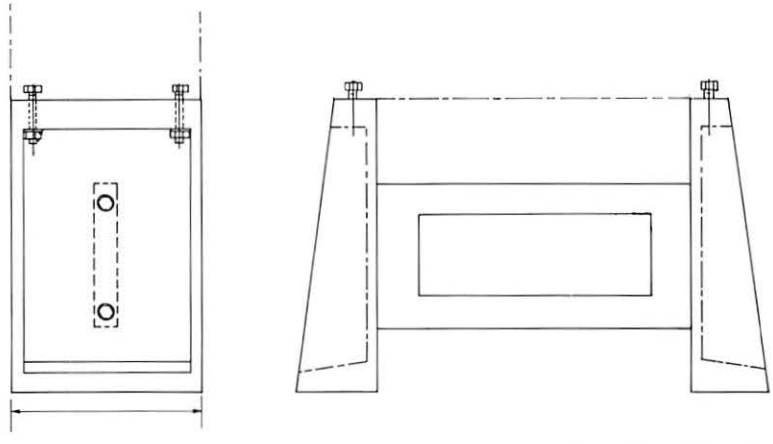

"BOX" CONCRETE PIER ASSEMBLY KITS (Includes two piers, one spacer plate and fasteners)	PART NO.
ASSEMBLY FOR 3'-2" HIGH AND LOW CASES	X451586-6802
ASSEMBLY FOR 4'-10" CS-II CASE	X451586-6803
ASSEMBLY FOR 6'-4" CS-II CASE	X451586-6804
ASSEMBLY FOR 9'-8" CS-II CASE	X451586-6805
TWO "BOX" PIERS WITH NO SPACER	X451586-6801

COMPONENTS

ITEM	PART NO.	ITEM	PART NO.
SINGLE PIER ,with 2 bolts, 2 nuts, and 2 washers for case mounting.	J792547	3'-1" SPACER	J725888
		4'-4" SPACER	J725888-0001
		6'-8" SPACER	J725888-0002
		10' SPACER	J725888-0003

GRADE CROSSING PROTECTION

GRADE CROSSING WARNING ASSEMBLIES

Flashing Signal Light Assembly RSE-10A1
Flashing Signal Light Assembly with Model 75 Cross. Gate. . . RSE-10A2
Gate Assembly with Stub Mast RSE-10A3
Grade Crossing Cantilever Assembly RSE-10A4

GRADE CROSSING WARNING EQUIPMENT

Grade Crossing Masts RSE-10B1
Junction Box Bases for 4 and 5 Inch Masts RSE-10B2
Grade Crossing Signs RSE-10B3
Grade Crossing Bell BA-10 . . . . . RSE-10B4
Flashing Light Assemblies RSE-10B5
Junction Box Cross Arms, XA-120 . . . . . RSE-10B6
Signal Light Units, HC-120A, HC-100 . . . . . RSE-10B7
Gate Mechanism and Components, Model 75 . . . . . RSE-10B8
Aluminum and Fiberglass Crossing Gate Arms RSE-10B9
Adapter Bracket for Crossing Gate Arms RSE-10B10

FOUNDATIONS

Crossing Signal and Cantilever Foundations RSE-10F1

GRADE CROSSING SIGNAL MASTS

US&S Grade Crossing Signal Masts are constructed of aluminum for easy handling, long life, and minimum maintenance.

The 13'6" mast is used for mounting grade crossing signals, signals with gate assemblies, or gate assemblies, only. A 6'9" stub mast is available for mounting US&S's gate mechanism with gate arm.

The 15'3", 16', and 18' masts are designed for converging highway applications. Additional holes are drilled at appropriate angles from center line to accomodate additional crossarms and light configurations.

4-INCH DIAMETER ALUMINUM GRADE CROSSING SIGNAL MASTS

(For use with 17" high Junction Box bases with 11-11/16" bolt spacing unless otherwise noted.)

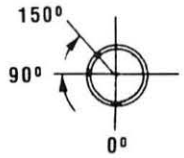

PART NO.	MAST HEIGHT	CONVERGING CROSSARM HOLE	NOTES
M451394-4301	6'9"	—	3
M451394-4401	13'6"	—	3
M451394-5101	13'6"	—	1, 3
M451394-5102	15'3"	90°	1, 3
M451394-5103	15'3"	—	1, 2, 3
M451394-4101	15'3"	—	3
M451394-4102	15'3"	30°	3
M451394-4103	15'3"	90°	3
M451394-4104	15'3"	150°	3

NOTES:

1. M451394-5101, -5102, & -5103 are designed to be used with a 12"Junction Box base with 9-1/2" bolt spacing.
2. M451394-5103 has two Junction Box base holes for use with a double Junction Box base.
3. All Crossarm Holes are $2^1/_8$"x$4^1/_4$". All Junction Box base holes are $2^7/_8$"x$6^1/_8$", with the exception of -5101, -5102, &-5103 which have $2^1/_4$" round holes.
4. For Junction Box Bases, see RSE-10B2.
5. For Junction Box Crossarms, see RSE-10B6.

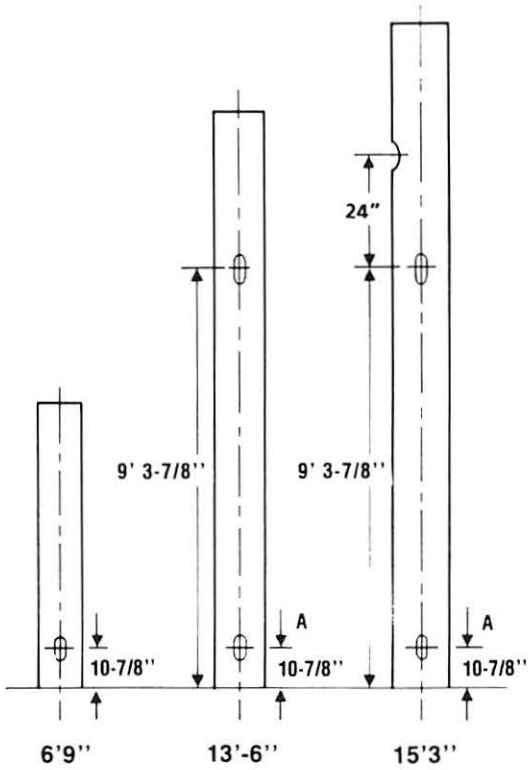

Dimension "A" on -5101, -5102, 5103 is $7^7/_{16}$".

COPYRIGHT 1986, US&S DIVISION OF AMERICAN STANDARD INC.

5-INCH DIAMETER ALUMINUM GRADE CROSSING SIGNAL MASTS

(For use with 17" high Junction Box bases with 11-11/16" bolt spacing.)

PART NO.	MAST HEIGHT	CONVERGING CROSSARM HOLE	NOTES (See at right)
M451394-4201	6'9"	—	1
M451394-3901	13'6"	—	1
M451394-3902	13'6"	0°	1, 2
M451394-3903	13'6"	90°	1, 2
M451394-3904	13'6"	270°	1, 2
M451394-4001	15'3"	—	1, 2
M451394-4002	15'3"	30°	1, 2
M451394-4003	15'3"	90°	1, 2
M451394-4004	15'3"	150°	1, 2
M451394-4005	15'3"	210°	1, 2
M451394-4006	15'3"	225°	1, 2
M451394-4007	15'3"	270°	1, 2
M451394-4008	15'3"	330°	1, 2
M451394-6701	16'2½"	—	1, 2
M451394-6702	16'2½"	30°	1, 2
M451394-6703	16'2½"	90°	1, 2
M451394-6704	16'2½"	150°	1, 2
M451394-6705	16'2½"	210°	1, 2
M451394-6706	16'2½"	225°	1, 2
M451394-6707	16'2½"	270°	1, 2
M451394-6708	16'2½"	330°	1, 2
M451394-6601	16'2½"	45°-45°	3
M451394-6603	16'2½"	30°-30°	3
M451394-6605	16'2½"	60°-60°	3
M451394-6607	16'2½"	75°-75°	3
M451394-6609	16'2½"	90°-90°	3
M451394-6801	18'6"	45°-45°	3, 4
M451394-6803	18'6"	30°-30°	3, 4
M451394-6805	18'6"	60°-60°	3, 4
M451394-6807	18'6"	75°-75°	3, 4
M451394-6809	18'6"	90°-90°	3, 4
M451394-6811	18'6"	110°-110°	3, 4
M451394-6813	18'6"	—	5
J023847-0007	21'2½"	—	5, 6

NOTES:

1. Junction Box hole - 2¼"x4½"
2. Crossarm hole - $2^1/_8$"x4¼"
3. Junction Box hole and Crossarm hole - $2^7/_8$"x4¼"
4. Has two Junction Box holes
5. No Crossarm holes
6. Custom hole drilling, specify on order
7. Junction Box gasket supplied with mast

PART NO.	NOTE
X451394-6602	7
X451394-6604	7
X451394-6606	7
X451394-6608	7
X451394-6610	7
X451394-6802	7
X451394-6804	7
X451394-6806	7
X451394-6808	7
X451394-6810	7
X451394-6812	7
X451394-6814	7

5-INCH DIAMETER ALUMINUM GRADE CROSSING SIGNAL MASTS

Dimensional diagram illustrating various configurations for cross arm heights and angles to accommodate additional converging crossarm holes to conform to actual highway conditions. The converging arm hole angle is measured from the plain of the Junction Box base hole which is considered to be 0°.

NOTES

1. The 21'-2½" mast is available without crossarm holes for custom applications exceeding the 18'6" mast. Specify crossarm hole angles when ordering.
2. Converging arm angles are as given in the tabulation on page 2.

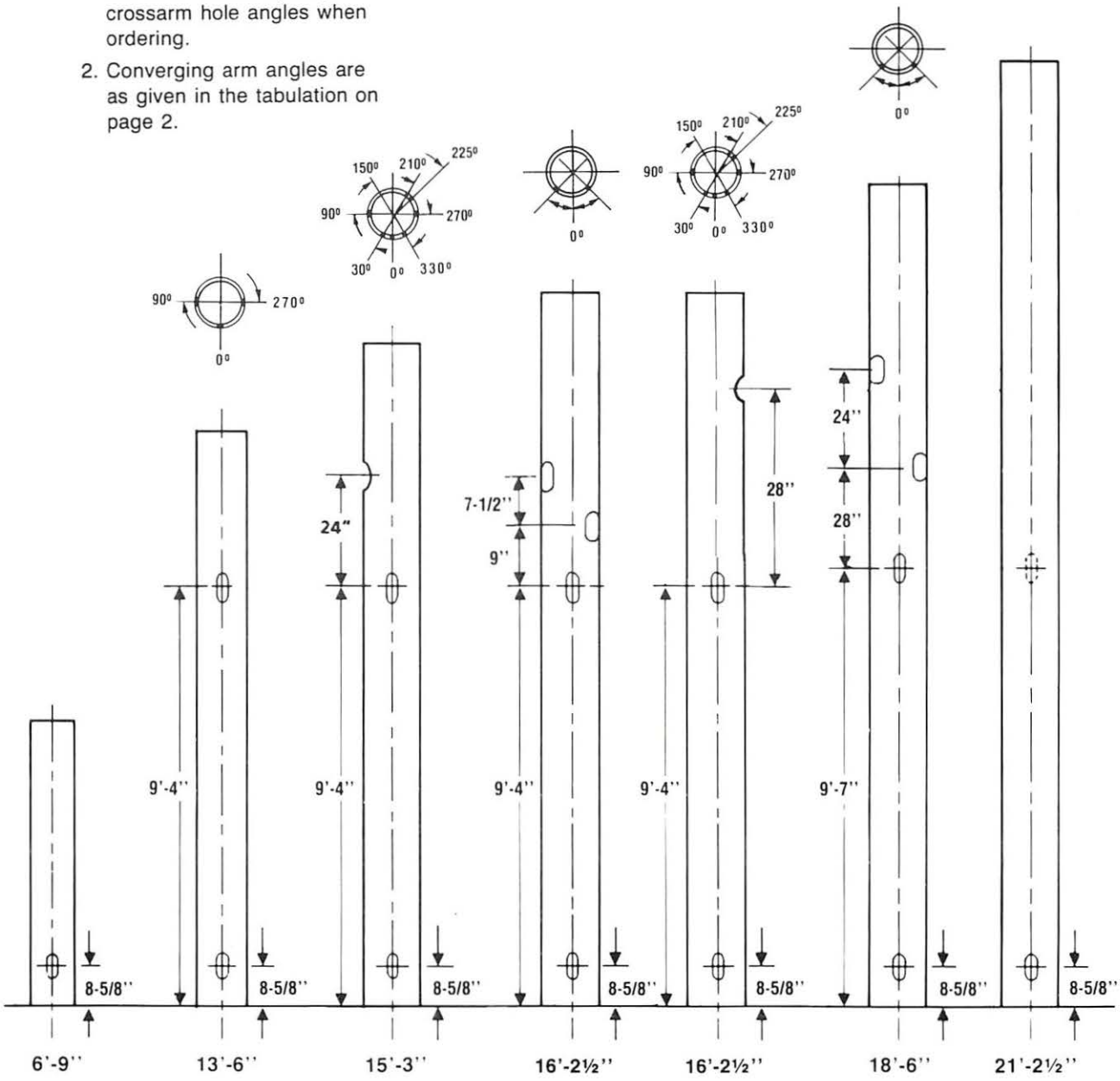

NOTE: DRAWINGS NOT TO SCALE

ACCESSORIES

PINNACLE		RODENT COVER PLATE		GALVANIZED STEP	
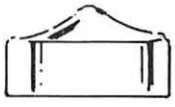		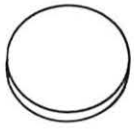		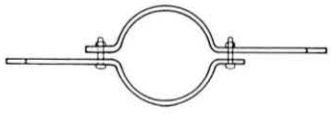	
PART NO.	DESCRIPTION	PART NO.	DESCRIPTION	PART NO.	DESCRIPTION
J026104 J026111	For 4" diameter mast. For 5" diameter mast	M451195-3601 M451195-3602	For 4" diameter mast. For 5" diameter mast	N199590	Includes mounting hardware.

SIGNAL LIGHT UNITS
HC-120A & HC-100

HC-120A SIGNAL LIGHT UNITS

US&S's HC-120A HC-120A Signal Light Unit with 12" roundel provides 43% more illuminated area than signal light units with a 8-3/8" roundel. The HC-120A uses a *full* 12", deep dish, metal parabolic reflector, center mounted for easy replacement and to prevent shock and damage. A brass plated socket is provided for the bulb. The socket mounting allows for X, Y, Z axis lamp location adjustment. Voltage readings can be taken at the bulb for battery adjustment.

Constructed of aluminum with stainless steel hardware, the unit is designed for easy maintenance. The cover provides quick and easy access to the interior; cover bolts accept AAR terminal wrenches. To resist breaking and damage,the roundel and side windows are made of a polycarbonate material. The unit has a standard 1-1/4" straight pipe thread suitable for connecting the light unit to all crossarms.

The signal light unit, including the socket, has 3000 volt insulation from ground. The socket accepts 18 or 25 watt, 10 volt S-11 bulbs; 25 watt, 110 volt G-16-1/2 bulbs; or Quartz-Iodide bulbs.

COMPLETE ASSEMBLY -Includes 12" red Lexan® roundel

PART NO.	DEFLECTION	DESCRIPTION
N451497-0301	20°/32°	Without hood and background
X451497-0302	20°/32°	With hood and background
N451497-0303	30°/15°	Without hood and background
X451497-0304	30°/15°	With hood and background

ROUNDEL - Red Lexan®

PART NO.	DEFLECTION
J532136	20°/32°
J532140	30°/15°
J532141	70°/0°

20" DIA. BACKGROUND

PART NO. M451498-2401

24" DIA. BACKGROUND

PART NO. M451498-2402

HOOD

PART NO. M451498-2501

REFLECTOR

PART NO. J532137-0201

LAMPS FOR HC-120A AND HC-100

PART NO.	TYPE	VOLTS	WATTS
J071463	S.C.B.C	10	18
J071574	S.C.B.C.	10	25
J714054	S C B.C.	110	25
J714283	Q.I.	10	16
J714284	Q.I.	10	36

®LEXAN is a trade name of the General Electric Company

PRINTED IN USA

UNION SWITCH & SIGNAL DIVISION
AMERICAN STANDARD INC./ PITTSBURGH, PA 15237

COPYRIGHT 1986. US&S DIVISION OF AMERICAN STANDARD INC

RSE-10B7
REV. 6/86

HC-100 SIGNAL LIGHT UNITS

The HC-100 Signal Light Unit with 8-3/8" roundel meets the needs of modern high speed highways. This rugged unit, designed for easy maintenance and long trouble-free service, is constructed of light weight aluminum. The optical system, with a 3-axis adjustable lamp combined with uniquely designed roundels, provide superior light indications; exceeding AAR light output specifications. Roundels of red Lexan and plexiglass are offered in various spread combinations, the standard being 30°/15°. For special applications, a yellow glass roundel is available. Lamps used with the HC-100 unit are the same as those used for the HC-120A. Refer to the tabulation on page 1.

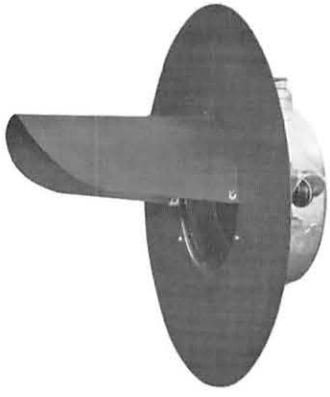

COMPLETE ASSEMBLIES

PART NO.	DESCRIPTION
X390731-001	HC-100 Signal Light Unit complete with hood and background, 30°/15° deflection
X451646-2001	Same as above, plus mtg. adapter

MAJOR COMPONENTS

M390714	Hood
M390713	Background
N293215	Reflector
R396874	Roundel Guard (See Right)
J026105-2201	Adapter (See Right)

ROUNDELS ONLY

PART NO.	DEFLECT.	TYPE
J530119	30°/15°	Red Lexan®
J530117	70°/0°	Red Lexan®
J532135	20°/10°	Red Lexan® with 2" "Hot Spot"
J532119	20°/32°	Red Plexiglass
J530120	30°/20°	Yellow Plexiglass

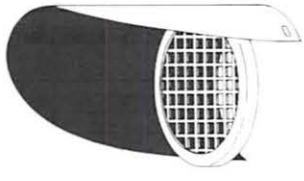

ROUNDEL GUARD

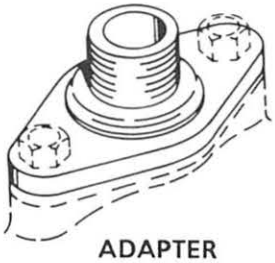

ADAPTER

LIGHT UNITS

Does not include hood, background, adapter, roundel guard, or lamp.

PART NO.	DEFLECTION	ROUNDEL
N394817	30°/15°	Red Lexan®
N390729	70°/0°	Red Lexan
N437283	20°/10°	Red Lexan with 2" Hot Spot "
N390730	20°/32°	Red Plexiglass
N394830	30°/15°	Yellow Glass

ALUMINUM AND FIBERGLASS CROSSING GATE ARMS,

U S & S's Aluminum and Fiberglass Crossing Gate Arms are the answer to the problem of the fragile wooden crossing gate arms. These arms can be used in new installations or can be adapted to existing gate mechanisms. Utilizing a telescoping feature, the gate arms can be extended in lengths from 17 to 27 feet, 28 to 33 feet, and 34 to 40 feet, allowing custom fitting to each crossing. The gate arm is easily mounted to adapter brackets equipped with a break-away feature, which allow mating with other types of gate mechanisms.

The gate arms bolt to the existing gate mechanism by means of a strong steel adapter bracket (see RSE-10B10). Included with the gate arms is a wire harness with plug, which is used to connect the three weatherproof lights on the arm to the light circuit. For ease of installation and servicing, a cable connector is installed between the 1st and 2nd arm sections.

The gate arms are made of aluminum or fiberglass and constructed in three telescoping sections. Each section is equipped with a weatherproof light in a choice of 4" or 7". The sections are bolted together and form an arm which mounts in a steel adapter and is retained with a shear pin. This arrangement will minimize damage to the arm and prevent damaging the operating mechanism if the arm is struck by a vehicle. The gate arm is furnished with 16-inch diagonal red and white stripes of Engineering Grade or Hi-Intensity Scotch-Lite® for improved reflective visibility.

FEATURES

- Mounts on existing equipment.
- Reduces inventory and installation problems.
- A size to suit most applications.
- Tough aluminum or fiberglass arms stand straight, no warping — proven design.
- Shear pin breaks on impact for minimum arm damage.
- Reflective striping on gate arm.
- No painting required.
- Gate lights are plug connected, easily replaced, weatherproof.
- Complies with AAR specifications and state requirements.

SPECIFICATIONS

Gate Arm

Weight (approx.):

27 ft. Gate Arm	30 lbs.
33 ft. Gate Arm	40 lbs.
40 ft. Gate Arm	50 lbs.

Arm Length (adjustable):

27 ft. Gate Arm	17 to 27 ft.
33 ft. Gate Arm	28 to 33 ft.
40 ft. Gate Arm	34 to 40 ft.

COPYRIGHT 1986, US&S DIVISION OF AMERICAN STANDARD INC.

CROSSING GATE ARM ASSEMBLIES – WITH THREE SIGNAL LIGHTS

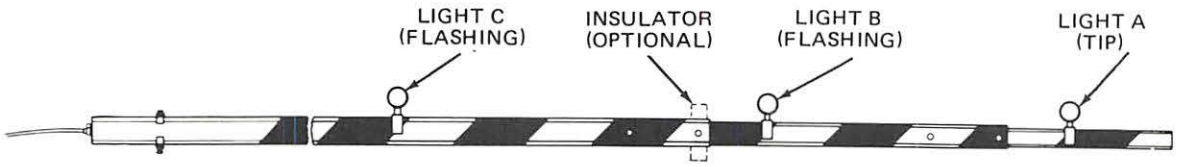

ALUMINUM - Includes shear pins and wiring harness

PART NO.	GATE ARM LENGTH	SCOTCHLITE REFLECTIVE STRIPING	SIGNAL LIGHTS
N451070-0201	17′ - 27′	Eng. Grade	4″
N451484-5703	17′ - 27′	Eng. Grade	7″
N451070-0211	17′ - 27′	Hi-Intensity	4″
N451484-5704	17′ - 27′	Hi-Intensity	7″
N451070-0207	28′ - 33′	Eng. Grade	4″
N451484-5501	28′ - 33′	Eng. Grade	7″
N451070-0213	28′ - 33′	Hi-Intensity	4″
N451484-5716	28′ - 33′	Hi-Intensity	7″
N451484-3601	34′ - 40′	Eng. Grade	4″
N451484-5727	34′ - 40′	Eng. Grade	7″
N451484-3604	34′ - 40′	Hi-Intensity	4″
N451484-5728	34′ - 40′	Hi-Intensity	7″

FIBERGLASS - Includes shear pins and wiring harness

PART NO.	GATE ARM LENGTH	SCOTCHLITE REFLECTIVE STRIPING	SIGNAL LIGHTS
N451484-5707	17′ - 27′	Eng. Grade	4″
N451484-5709	17′ - 27′	Eng. Grade	7″
N451484-5708	17′ - 27	Hi-Intensity	4″
N451484-5710	17′ - 27′	Hi-Intensity	7″
N451484-5719	28′ - 33′	Eng. Grade	4″
N451484-5721	28′ - 33′	Eng. Grade	7″
N451484-5720	28′ - 33′	Hi-Intensity	4″
N451484-5722	28′ - 33′	Hi-Intensity	7″
N451484-5731	34′ - 40′	Eng. Grade	4″
N451484-5733	34′ - 40′	Eng. Grade	7″
N451484-5732	34′ - 40′	Hi-Intensity	4″
N451484-5734	34′ - 40′	Hi-Intensity	7″

CROSSING GATE ARM ASSEMBLIES – WITHOUT SIGNAL LIGHTS

ALUMINUM

PART NO.	GATE ARM LENGTH	SCOTCHLITE REFLECTIVE STRIPING
N451070-0202	17′ - 27′	Eng. Grade
N451070-0212	17′ - 27′	Hi-Intensity
N451070-0210	28′ - 33′	Eng. Grade
N451070-0214	28′ - 33′	Hi-Intensity
N451484-3603	34′ - 40′	Eng. Grade
N451484-3605	34′ - 40′	Hi-Intensity

FIBERGLASS

PART NO.	GATE ARM LENGTH	SCOTCHLITE REFLECTIVE STRIPING
N451484-5711	17′ - 27′	Eng. Grade
N451484-5712	17′ - 27′	Hi-Intensity
N451484-5723	28′ - 33′	Eng. Grade
N451484-5724	28′ - 33′	Hi-Intensity
N451484-5735	34′ - 40′	Eng. Grade
N451484-5736	34′ - 40′	Hi-Intensity

CROSSING GATE ARM SECTIONS
(Repair Use Only)

1st SECTION – ALUMINUM *

PART NO.	FOR GATE ARMS	SCOTCHLITE REFLECTIVE STRIPING
N451071-3901	17' - 27'	Eng. Grade
N451071-3904	17' - 27'	Hi-Intensity
N451071-6203	28' - 33'	Eng. Grade
N451071-6206	28' - 33'	Hi-Intensity
N451484-4001	34' - 40'	Eng. Grade
N451484-4002	34' - 40'	Hi-Intensity

***1st section of fiberglass gate arms is aluminum**

2nd SECTION – ALUMINUM

PART NO.	FOR GATE ARMS	SCOTCHLITE REFLECTIVE STRIPING
N451071-3902	17' - 27' 28' - 33	Eng. Grade
N451071-3905	17' - 27' 28' - 33'	Hi-Intensity
N451484-4003	34' - 40'	Eng. Grade
N451484-4004	34' - 40'	Hi-Intensity

2nd SECTION – FIBERGLASS

PART NO.	FOR GATE ARMS	SCOTCHLITE REFLECTIVE STRIPING
N451484-5609	17' - 27' 28 - 33'	Eng. Grade
N451484-5610	17' - 27' 28' - 33	Hi-Intensity
N451484-5613	34' - 40'	Eng. Grade
N451484-5614	34' - 40'	Hi-Intensity

3rd SECTION – ALUMINUM

PART NO.	FOR GATE ARMS	SCOTCHLITE REFLECTIVE STRIPING
N451071-3903	17' - 27' 28' - 33'	Eng. Grade
N451071-3906	17' - 27' 28' - 33'	Hi-Intensity
N451484-4005	34' - 40'	Eng. Grade
N451484-4006	34' - 40'	Hi-Intensity

3rd SECTION – FIBERGLASS

PART NO.	FOR GATE ARMS	SCOTCHLITE REFLECTIVE STRIPING
N451484-5617	17' - 27' 28' - 33'	Eng. Grade
N451484-5618	17' - 27' 28' - 33'	Hi-Intensity
N451484-5621	34' - 40'	Eng. Grade
N451484-5622	34' - 40'	Hi-Intensity

CROSSING GATE COMPONENTS

WIRING HARNESS

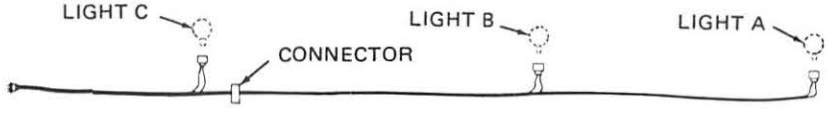

PART NO.	DESCRIPTION
N451071-3804	17'-27' Gate Arm
N451071-3806	28'-33' Gate Arm
N451071-3807	34'-40' Gate Arm

LAMP, S.C.B.C. BASE

PART NO.	DESCRIPTION
J071463	10 volt, 18 watt
J071574	10 volt, 25 watt

SIGNAL LIGHT ASSEMBLY

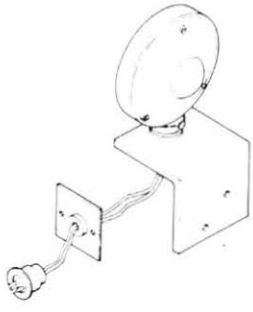

PART NO.	DESCRIPTION
N451071-3801	4" Lens
N451484-5401	7" Lens
J531485	4" Replacement Red Lens includes gasket and screws

SHEAR PIN ASSEMBLY

Includes Cotter Pin and Nuts

PART NO.	DESCRIPTION
N451071-4706	17'-27' Gate Arm
N451071-4709	28'-33' Gate Arm
N451071-4710	34'-40' Gate Arm
N451071-4713	*

SHEAR PIN ONLY

PART NO.	DESCRIPTION
R451071-4704	17'-27' Gate Arm
R451071-4705	28'-33' Gate Arm
R451071-4708	34'-40' Gate Arm
R451071-4712	*

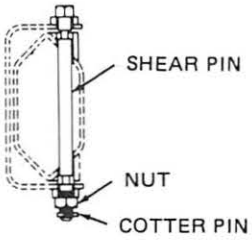

For applications where wind loads are greater then 50 m.p.h., shear pins of the next greatest gate arm length should be used i.e. a 17'-27' gate arm with a wind force over 50 m.p.h. needs the shear pin for a 28'-33' gate arm.

***Extra Heavy Duty Shear Pin for 40 ft. Gate Arms sustaining windloads in excess of 50 MPH.**

DATA ACQUISITION AND CONTROL SYSTEMS

DATA TRANSMISSION SYSTEMS (FULL DIGITAL)

DDL-601A Digital Data Link, Office and Field RSE-11A1
DDL-601B Digital Data Link, Field RSE-11A2

DATA TRANSMISSION SYSTEMS (RELAY-CODE COMPATIBLE)

FCE-500 Field Code Emulator RSE-11B1
SAM-II Stand-Alone Monitor RSE-11B2

MULTI-PURPOSE DATA SYSTEM AND LOGIC EMULATOR

Genisys Non-Vital Logic Emulator RSE-11C1

EVENT RECORDER

Eventtrak Digital Event Recording System RSE-11D1

FIELD CODE EMULATOR
FCE-500

The FCE-500 is designed as a direct replacement for US&S 506, 506A, 506C, 514, 502A, 504B and 504C relay type field code equipment. It has microprocessor electronics, but is equipped with wiring terminals identical to those on the existing relay-based system (LCS and storage or extension units). This permits installation of the FCE-500 system with little or no modifications to existing equipment or circuits. The FCE-500 also allows cost-effective conversion of the entire relay-based code system to high-speed digital operation.

DESCRIPTION

Different models of the FCE-500 are provided for the different code system emulations. However, all basically consist of a 19 inch printed circuit board cardfile that can be shelf or rack-mounted. The cardfile contains the following basic boards:

CONTROLLER PCB - Contains the control logic, field adjustment switches and the software that emulates the existing code system.

POWER SUPPLY CONVERTER PCB - Converts existing dc power in facility to levels needed by the FCE-500's internal electronics.

RELAY-OUTPUT PCB - Converts digital messages from the Controller PCB to relay-contact outputs for the existing control circuits. Outputs are electrically and timing-compatible with the existing circuits. One relay-output PCB handles all of the control bit functions of the LCS unit. Up to four additional relay-output boards handle control bit functions for any storage or extension units.

OPTICAL-INPUT PCB - Electrically isolates and converts relay-contact inputs to digital form for the Controller PCB. One optical-input PCB handles all of the indication bit functions of the LCS unit. Up to four additional optical-input boards handle indication bits functions for any storage/ext. units.

CODE LINE INTERFACE PCB - Permits communications between the existing dc code line and the high speed logic of the Controller Board. Different versions of this board are provided to interface the different types of code lines.

A standard terminal post board is mounted on top of the FCE-500 card file. This matches the terminal post board on the old LCS unit, permitting direct reuse of the existing LCS wiring connectors. The FCE-500 is available with separate terminal post boxes that accept wiring from any existing storage or extension units. These boxes have no electronics of their own. All functions of the storage or extension units are now handled by the single FCE-500.

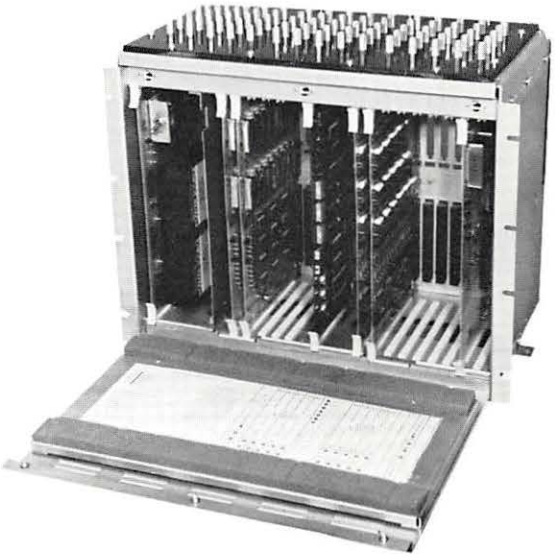

APPLICATIONS AND UPGRADING

The FCE-500 will directly replace any 506, 506A, 506C, 514, 502A, 502B and 504C relay code system on a one-by-one basis (other relay code stations still operational) or on a system-wide basis. FCE-500 systems can also be installed as new locations in a relay-based code system. No changes are required in office relay code circuits. Once all field code stations are converted to FCE-500 units, the entire code system can be converted to all-digital operation, including high speed modem communications with a digital code office.

FEATURES

- Single FCE-500 Cardfile replaces LCS and any storage or extension units.
- Operationally compatible with relay field and office code equipment.
- Designed for direct changeover of present LCS and storage or extension unit wiring.
- Cost-effective relay-logic to digital logic con- version on station-by-station basis.
- Allows total system conversion with digital code office, high speed modem communica- tions.
- Plug-in PCB's for ease of maintenance, mini- mum down time.
- Field troubleshooting with LED indications.

PRINTED IN USA

UNION SWITCH & SIGNAL DIVISION
AMERICAN STANDARD INC./ PITTSBURGH, PA 15237

COPYRIGHT 1986, US&S DIVISION OF AMERICAN STANDARD INC.

RSE-11B1
REV. 6.86

SPECIFICATIONS

Cardfile Dimensions: 19" W x 15-5/8" H x 10-5/8" D

Cardfile Mounting: Shelf or standard 19" rack.

Storage/Ext. Box* Dimensions
506, 506A, 506C & 514:
9-7/8" W x 3" H x 10" D
502A, 504B & 504C:
12-13/16" W x 3" H x 6-31/32" D

Storage/Ext. Box* Mounting Shelf

Cardfile Connections:
506, 506A, 506C & 514:
96 terminal posts on 4 plug boards
502A, 504B & 504C:
75 terminal posts on 3 plug boards

*506, 506A, 502A, 504B, & 504C: Refers to FCE-500 storage/ext. box that replaces existing storage unit.
506C & 514: Refers to FCE-500 storage/ext. box that replaces existing extension unit.

Storage/Ext. Box* Connections
506, 506A, 506C & 514:
48 terminal posts on 1 plug board

502A, 504B & 504C:
50 terminal posts on 2 plug boards

Data Capabilities:
506, 506A, 506C, 514, 504B, 504C:
7 controls per output board (max), 7 indications per input board, (max), 35 total controls and 35 total indications (max.)

502A: 5 controls per output board (max.), 7 indications per input board (max.), 25 total controls and 35 total indications (max.)

Power Input: 9 to 18 Vdc, 12 Vdc nominal

Temperature Range: -40° to +70° C

ORDERING REFERENCES

COMPLETE SYSTEMS

Ordering example #1, no storage or extension units: N451583-0901, replaces a 506 LCS unit only. Cardfile contains standard boards, plus one relay-output PCB and one optical-input PCB (LCS controls and indications).

Ordering example #2, with storage or extension unit(s): N451583-0923, replaces a 502A LCS unit and two storage units. Cardfile contains standard boards, plus three relay-output PCB's and three optical-input PCB's (controls and indications for LCS and two storage units). System also includes storage/etx. box and cable assemblies N451458-5401 (5 foot cable) and N451458-5402 (7 foot cable). Refer to page 3 for cable and PCB part tabulation.

PART NO.	DESCRIPTION	PART NO.	DESCRIPTION
N451583-0901	506 Emulation, with no storage units	N451583-0921	502A Emulation, with no storage units
N451583-0902	506 Emulation, with 1 storage unit	N451583-0922	502A Emulation, with 1 storage unit
N451583-0903	506 Emulation, with 2 storage units	N451583-0923	502A Emulation, with 2 storage units
N451583-0904	506 Emulation, with 3 storage units	N451583-0924	502A Emulation, with 3 storage units
N451583-0905	506 Emulation, with 4 storage units	N451583-0925	502A Emulation, with 4 storage units
N451583-0906	506A Emulation, with no storage units	N451583-0926	504B Emulation, with no storage units
N451583-0907	506A Emulation, with 1 storage unit	N451583-0927	504B Emulation, with 1 storage unit
N451583-0908	506A Emulation, with 2 storage units	N451583-0928	504B Emulation, with 2 storage units
N451583-0909	506A Emulation, with 3 storage units	N451583-0929	504B Emulation, with 3 storage units
N451583-0910	506A Emulation, with 4 storage units	N451583-0930	504B Emulation, with 4 storage units
N451583-0911	506C Emulation, with no exten. units	N451583-0931	504C Emulation, with no storage units
N451583-0912	506C Emulation, with 1 exten. unit	N451583-0932	504C Emulation, with 1 storage unit
N451583-0913	506C Emulation, with 2 exten. units	N451583-0933	504C Emulation, with 2 storage units
N451583-0914	506C Emulation, with 3 exten. units	N451583-0934	504C Emulation, with 3 storage units
N451583-0915	506C Emulation, with 4 exten. units	N451583-0935	504C Emulation, with 4 storage units
N451583-0916	514 Emulation, with no exten. units		
N451583-0917	514 Emulation, with 1 exten. unit		
N451583-0918	514 Emulation, with 2 exten. units		
N451583-0919	514 Emulation, with 3 exten. units		
N451583-0920	514 Emulation, with 4 exten. units		

ORDERING REFERENCES

REPLACEMENT AND TEST EQUIPMENT

PART NO.	DESCRIPTION	APPLICATIONS
N451458-5101	1st storage/ext. box and cable, 5 ft.	Replace 506 & 506A #1 storage unit, 506C & 514 #1 extension unit.
N451458-5102	2nd storage/ext. box and cable, 7 ft.	Replace 506 & 506A #2 storage units, 506C & 514 #2 extension unit.
N451458-5103	3rd storage/ext. box and cable, 9 ft.	Replace 506 & 506A #3 storage units, 506C & 514 #3 extension unit.
N451458-5104	4th storage/ext. box and cable, 11 ft.	Replace 506 & 506A #4 storage units, 506C & 514 #4 extension unit.
N451458-5105	xth storage/ext. box and cable, 17 ft.	Replace 506 & 506A storage units, 506C & 514 extension units. Use when storage or extension unit is not mounted adjacent to LCS (i.e. different shelf).
N451458-5401	1st storage/ext. box and cable, 5 ft.	Replace 502A #1 storage unit.
N451458-5402	2nd storage/ext. box and cable, 7 ft.	Replace 502A #2 storage unit.
N451458-5403	3rd storage/ext. box and cable, 9 ft.	Replace 502A #3 storage unit.
N451458-5404	4th storage/ext. box and cable, 11 ft.	Replace 502A #4 storage unit.
N451458-5405	xth storage/ext. box and cable, 17 ft.	Replace 502A storage units. Use when storage unit is not mounted adjacent to LCS (i.e. different shelf).
N451458-5501	1st storage/ext. box and cable, 5 ft.	Replace 504B & 504C #1 storage unit.
N451458-5502	2nd storage/ext. box and cable, 7 ft.	Replace 504B & 504C #2 storage unit.
N451458-5503	3rd storage/ext. box and cable, 9 ft.	Replace 504B & 504C #3 storage unit.
N451458-5504	4th storage/ext. box and cable, 11 ft.	Replace 504B & 504C #4 storage unit.
N451458-5505	xth storage/ext. box and cable, 17 ft.	Replace 504B & 504C storage units. Use when storage unit is not mounted adjacent to LCS (i.e. different shelf).
N451441-4305	Controller PCB	All systems. Must be field programmed for the particular code system emulation.
N451441-3303	Power Supply Converter PCB	All systems. 9 to 18 Vdc input. +5Vdc, +12 Vdc, -12Vdc output.
N451441-5001	Sequential Delivery PCB (relay-output)	506, 506A, 506C & 514 systems. Provides sequential output of controls.
N451441-3601	Control Delivery PCB (relay-output)	502A, 504B & 504C systems. Provides parallel output of controls.
N085722-1001	Transmitter-Opto PCB (optical-inut)	All systems. Accepts relay contact inputs, 5 to 32 volts ac or dc. (PCB name from previous application).
N451441-6801	FRC Parallel Interface PCB	506, 506A, 506C, 514, 504B & 504C. Interface with parallel dc code line.
N451441-7001	FRC Serial Interface PCB	502A. Interface with serial dc code line.
N451400-2201	TS-203 Test Set	Test Transmitter-Opto PCB.
N451400-3202	TS-204 Test Set	Test Controller PCB.
N451400-3101	TS-205 Test Set	Test Sequential Delivery and Control Delivery PCB's.

RETARDERS & YARD EQUIPMENT

RETARDERS

Model 67 Electro-Pneumatic Car Retarder RSE-14A1
Model 50-A Weight Proportional Car Retarder RSE-14A2
Model 50-B Car Retarder RSE-14A3
Model 81 Electro-Pneumatic Car Retarder RSE-14A4

RETARDER VALVES

HS-2 Retarder Control Valve RSE-14B1
Type X-2 Exhaust Valve RSE-14B2

SKATES

Hand Skates RSE-14C1

KITS

Hevi Car Kit for Models 31 and 32 Car Retarders RSE-14D1
Short Stroke Kit for Models 31 and 32 Car Retarders..... RSE-14D2
Hydraulic Piston Accumulator RSE-14D3
Mini-Care Cylinder Replacement Kit RSE-14D4

WEIGHT DETECTION

Type IV Weigh Rail RSE-14E1

SPEED DETECTION

DR-50 Gunn Diode Doppler Radar Unit RSE-14F1

DR-50 GUNN DIODE DOPPLER RADAR UNIT

The DR-50 Gunn Diode Doppler Radar unit incorporates the latest advances in Doppler radar circuit design for velocity measurement in classification yard retarder speed controls, and other applications requiring speed detection. It utilizes a solid-state Gunn diode microwave source to minimize replacement and recalibration of microwave-related components. The resulting reduction in equipment permits a compact, fully self-contained unit requiring a minimum of cabling connections.

DESCRIPTION

The DR-50 is contained in a rugged, sheet steel enclosure with a removable top cover. It is designed for mounting between or outside the rails, and provides full dirt and water protection for internal components. The front of the unit incorporates a non-metallic RF "window". Mounting and aiming is accomplished with four adjustable legs on a single mounting plate. Optional mounting hardware includes steel mounting frames, cast iron mounting piers, and a protective cover for dragging equipment. The unit is also shock-mounted internally for vibration protection.

DR-50 internal components are contained on a single subplate attached with thumb screws to simplify removal and installation. All electrical connections are routed through an entrance ell at the rear of the enclosure to an AAR terminal strip on the subplate.

The DR-50 electronics consist of a Gunn Diode microwave source and diode detector assembly, amplifier and RF power failure circuitry, check signal generating circuitry, and a power supply that operates from a standard 120 Vac, 60 Hz source. A single printed circuit board contains the power supply, amplifiers and check circuitry. This board is mounted on the subplate. All DR-50 electronics can be removed and replaced as a single unit in the field. No external check (calibration) signal is required for the DR-50. This signal (784.7 Hz) is generated and controlled internally.

FEATURES

- High reliability, solid-state design.
- High sensitivity
- Gunn Diode microwave source minimizes parts replacement and recalibration.
- Check signal generated internally; no need for external signal feed
- Single, easily-removed component chassis sim- plifies field maintenance.
- Rugged, light weight construction
- Easy installation and aiming
- Mountable outside or between the rails

SPECIFICATIONS

Dimensions:	28" L x 11 W" x 12-7/8" H
Weight:	10.4 lbs.
Operating Temps:	-40° to +70° C
Frequency:	10.525 GHz ± 21 MHz
Frequency Stability:	± 0.2% of assigned frequency
RF Power Output:	125 mW (max.), 50 mW (min.)
Output Type:	Type AΘ Emission
Spurious Emission:	No more than -44dB over full range, except at assigned frequency.
Range:	150 feet, nominal
Power Input:	95-125 Vac, 60 Hz, 12-14 W

PRINTED IN USA

UNION SWITCH & SIGNAL DIVISION
AMERICAN STANDARD INC./ PITTSBURGH, PA 15237

COPYRIGHT 1986, US&S DIVISION OF AMERICAN STANDARD INC

RSE-14F1
REV. 6/86

ORDERING REFERENCES

PART NO.	DESCRIPTION	APPLICATION
N451127-0301	DR-50 Gunn Diode Doppler Radar	Designed for mounting on cast iron base.
N451127-0302	DR-50 Gunn Diode Doppler Radar	Designed for mounting on concrete base.
N451127-0303	DR-50 Gunn Diode Doppler Radar	Designed for mounting on two cast iron bases.
X451474-0602	Kit, includes DR-50 unit N451127-0301, one cast iron base, mounting hardware	Mount radar outside of rails.
X451127-0702	Kit, includes DR-50 unit N451127-0303, two cast iron bases, protective cover, cover ramp, mounting hardware	Mount radar between rails.
X451127-0802	Kit, includes DR-50 Unit N451127-0302, support frame, protective cover, cover ramp, mounting hardware	Mount radar between rails.
X451127-0902	Kit, includes DR-50 unit N451127-0301, one cast iron foundation, protective cover, cover ramp, mounting hardware	Mount radar between rails.
N306403	Cast iron foundation	Mounts radar outside or between rails
N451128-1801	Protective cover	Protects radar unit from dragging equipment; required for all between-the-rails installations.
R451128-1801	Cover ramp	Attached to protective cover above; protects cabling end of radar unit.
R435631	Support frame	Mounts radar on concrete, use for between-the-rails installations.
N451128-2101	Gunn diode chassis (subplate)	

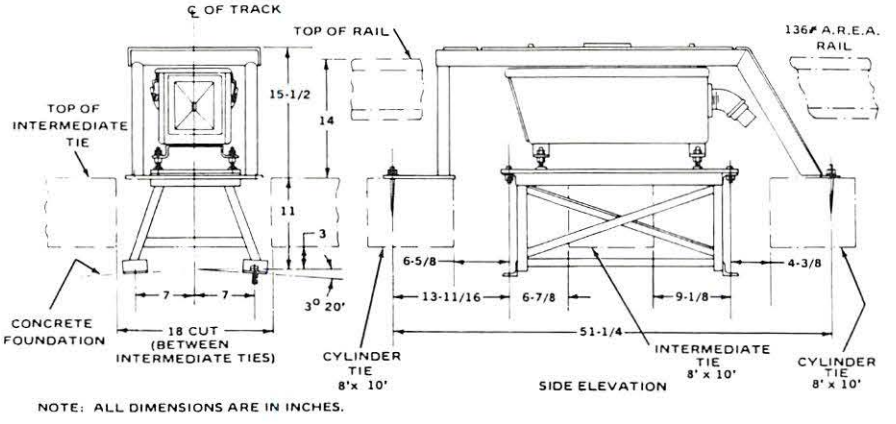

NOTE: ALL DIMENSIONS ARE IN INCHES.

RADAR MOUNTED ON SUPPORT FRAME

RADAR MOUNTED ON ONE C.I. PIER

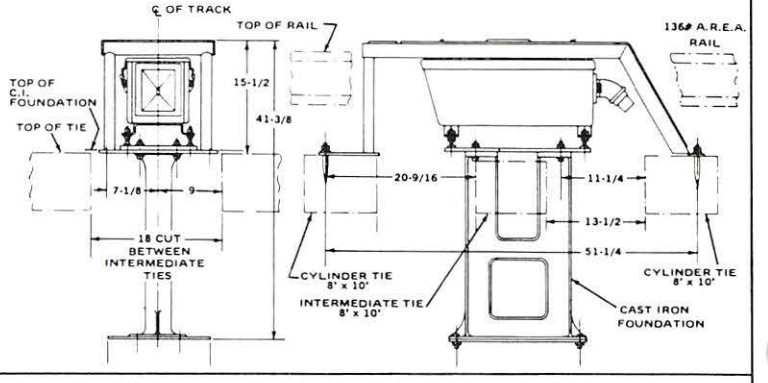

For complete mounting specifications, request Service Manual SM-6121.

USG-A E-Z Vue LIGHTNING ARRESTERS

USG-A E-Z Vue Lightning Arresters reduce the chances of damage to electrical and electronic equipment from lightning strokes. As a result, they help minimize service disruptions and equipment down-time. The arresters incorporate the latest in lightning arrester technology, and are available in several models to satisfy most applications, including high voltage, low voltage and ac line.

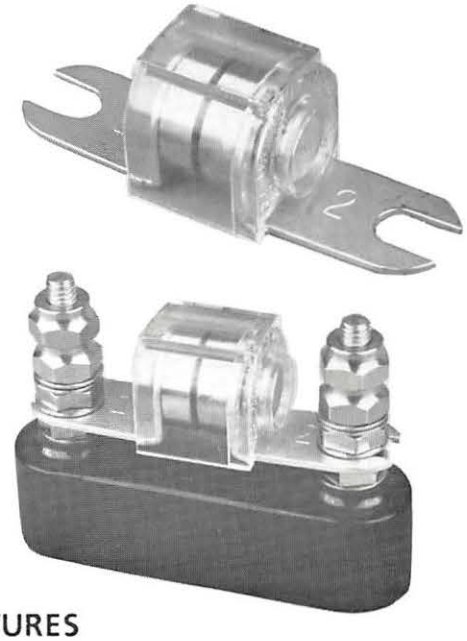

DESCRIPTION

USG-A E-Z Vue Lightning arresters are designed to limit surge voltage transients on electrical equipment below breakdown voltage, and minimize surge current through the equipment. They are provided as separate units, or are mounted on an AAR terminal block.

The Low Voltage Arrester employs a surge-protected varistor in parallel with a high-durability air gap formed by the separation of two heavy brass discs. Static charges are bled off by the varistor, and fast-rising transients are immediately clipped with a minimum of over- shoot. The varistor material is protected against heavy surge currents. The air gap is separated by a teflon spacer. This spacer is designed to maintain precise spacing, while resisting carbon-tracking or burning.

The High Voltage Arrester employs two high durability air gaps in series. One gap is formed by the separation of a resistor surface from a brass surface. The other gap is formed by the separation of two heavy brass discs. Teflon spacers are also provided for both air gaps.

The AC Line Arrester employs five high durability air gaps in series. Each gap is basically the same used in the Low Voltage Arrester.

USG-A E-Z Vue Lightning Arresters are equipped with a high-strength, clear Lexan® cover which permits visual inspection of internal components, and contains the explosive effects of heavy surges. Part numbers are stenciled and color-coded for quick identification of different units.

FEATURES

- In-line contacts and terminals minimize chances of damage from heavy surges
- Heavy terminals and contacts withstand high surge currents.
- Plated parts resist atmospheric corrosion.
- Thick, clear Lexan® cover resists explosive force of heavy surges, shields against flying pieces, resists fire, and permits visual inspection of internal elements.
- High and low firing voltage ranges compatible with standard circuit wiring
- Color coded part number stencils for quick unit indentification.
- Standard AAR mounting, compatible with existing arrester mounting arrangements.
- Low overshoot minimizes damage to sensitive electronic equipment from fast-rising surges.
- Low Voltage Arrester: Air gap in parallel with varistor material to dissipate static charge build-up.
- High Voltage Arrester: Air gap in series with varistor material to achieve low firing range, while minimizing possibility of air gap shortage.
- Self-cleaning design.

PRINTED IN USA

UNION SWITCH & SIGNAL DIVISION
AMERICAN STANDARD INC./ PITTSBURGH, PA 15237

COPYRIGHT 1986, US&S DIVISION OF AMERICAN STANDARD INC.

RSE-17A1
REV. 6/86

ORDERING REFERENCES

PART NO.	DESCRIPTION		
N451552-0101	**Low Voltage Arrester** (Ref. 2 in Figure 1)	Operating voltages: Firing Voltages: Resistance: Stencil color:	32 Vdc, 25 Vac 75-200 Vdc, 50-100 Vac (60 Hz) $\geq 10^3$ ohms @ 32 Vdc Blue
N451552-0201	**High Voltage Arrester** (Ref. 1 in Figure 1)	Operating voltages: Firing Voltages: Resistance: Stencil Color:	250 Vdc, 175 Vac 500-3000 Vdc, 350-950 Vac $\geq 10^9$ ohms @ 100 Vdc Red
N451552-0301	**AC Line Arrester** (Ref. 4 in Figure 1)	Operating voltages: Resistance: Stencil Color:	140 Vac $\geq 5 \times 10^3$ ohms @ 120 Vac Yellow
X451552-0301	Low Voltage Arrester, with AAR terminal block and mounting hardware		
X451552-0302	High Voltage Arrester, with AAR terminal block and mounting hardware		
X451552-0306	AC Line Arrester, with AAR terminal block and mounting hardware		

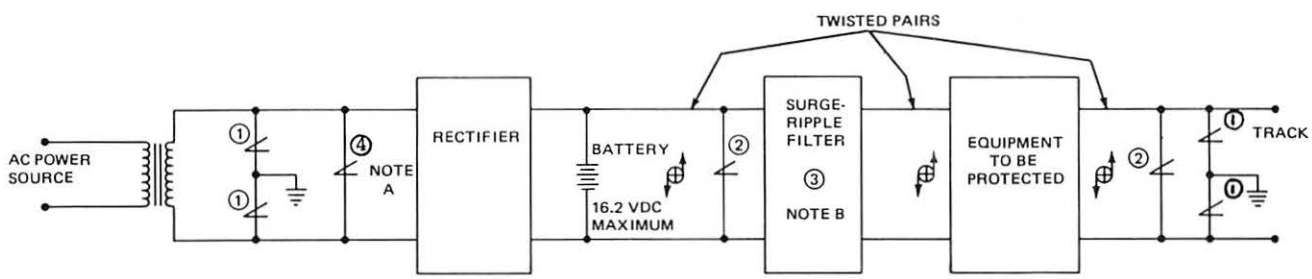

NOTES:

NOTE A: For 240 Vac operation: two AC Line Arresters (item 4) in series.

NOTE B: Use Surge Ripple Filter if battery ripple exceeds 5%. Filter part no. N451036-0702. Up to 2.5 amp load.

Figure 1. Typical Applications of Low Voltage, High Voltage and AC Line Arresters

CATALOG CHECK LIST

Your blue catalog binder, with subject matter Tabs RSE-1 through RSE-18 should contain the following catalog sections. Check this list to insure that your catalog is complete and up-to-date. If you are missing any sections, or have not received all issues indicated, notify Literature Storeroom, Union Switch & Signal Division, Swissvale, PA 15218.

SECTION	DATE			ISSUE NO.
	ORIG.	SECT. REV.	PAGE REV.	
Index	4-76	3-80		15
Check List		12-84		22
RSE-1 Contents	2-70	9-82		19
RSE-1A1	2-70	10-79		15
RSE-1B1	2-70	8-84		22
RSE-2 Contents	3-80	9-82		19
RSE-2B1	6-77	8-82		19
RSE-2B2	6-77	8-82		19
RSE-2C1	3-77	8-82		19
RSE-2C2	3-77	2-83		20
RSE-2C3	3-77			10
RSE-2D1	10-78			13
RSE-2D2	3-73	8-82		19
RSE-2D3	10-76	8-82		19
RSE-2F1	10-76	8-82		19
RSE-3 Contents	10-72	9-82		19
RSE-3A1	10-72	2-84		21
RSE-3A2	10-72	8-82		19
RSE-3A4	10-72	8-82		19
RSE-3B1	10-72	8-82		19
RSE-3B2	8-82	9/84		22
RSE-3B4	10-72	8-82		19
RSE-3C1	10-72	8-82		19
RSE-3D1	6-70	2-83		20
RSE-3D2	10-72			2
RSE-3D3	10-72	2-75		6
RSE-3D4	10-72			2
RSE-3D5	10-72	2-83		20
RSE-3D6	4-76	5-85		23
RSE-3E1	6-70	4-76		8
RSE-3E2	2-74	10-78		13
RSE-3E3	4-76			8
RSE-3E4	4-76	5-85		23
RSE-3E5	4-76	8-82		19
RSE-4 Contents	4-70	9-82		19
RSE-4	4-70	5-85		23
RSE-4AI	4-70	2-84		22
RSE-4A2	4-70	7-84		22
RSE-4A3	4-70	7-84		22
RSE-4A4	3-81	7-84		22
RSE-4A5	3-81	7-84		22
RSE-4B1	4-70	7-84		22
RSE-4C1	4-70	5-85		23
RSE-4D1	4-70	7-84		22
RSE-4D2	7-70	3-81		17

SECTION	DATE			ISSUE NO.
	ORIG.	SECT. REV.	PAGE REV.	
RSE-4E1	4-70	3-81		17
RSE-4E2	4-70	3-81		17
RSE-4E3	3-81	2-84		21
RSE-4F1	4-70	3-81		17
RSE-4F2	3-81			17
RSE-4F3	3-81	7/84		22
RSE-4F4	3-81	3-83		20
RSE-4F5	6-82			19
RSE-4F6	10-82	2-83		20
RSE-4G1	9-82	5-85		23
RSE-5 Contents	4-70	9-82		19
RSE-5	4-70	5-81		18
RSE-5A1	4-70	5-81		18
RSE-5A2	4-70	5-81		18
RSE-5A3	5-81	7-84		22
RSE-5A4	4-70	5-81		18
RSE-5A5	4-70	5-81		18
RSE-5B1	4-70	5-81		18
RSE-5B2	4-70	5-81		18
RSE-5B3	4-70	5-81		18
RSE-5C1	4-70	5-81		18
RSE-5C2	5-81			18
RSE-5D1	4-70	5-81		18
RSE-5D2	4-70	5-81		18
RSE-5E1	4-70	5-81		18
RSE-5E2	5-81			18
RSE-5E3	5-81			18
RSE-5E4	5-81			18
RSE-5E5	5-81			18
RSE-6 Contents	4-70	9-82		19
RSE-6A1	4-70	3-81		17
RSE-6B1	4-70	4-81		17
RSE-6C1	2-75	3-81		17
RSE-7 Contents	10-72	9-82		19
RSE-7A0	6-80	2-83		20
RSE-7A1	10-72	2-83		20
RSE-7A2	10-72	2-83		20
RSE-7B1	10-72			2
RSE-7C1	1-79	2-83		20
RSE-7C2	3-80			16
RSE-7D0	4-76	6-82		19
RSE-7D1	2-75	6-82		19
RSE-7D2	9-75	6-82		19
RSE-7E1	2-83			20

CATALOG CHECK LIST
(Continued)

SECTION	DATE ORIG.	DATE SECT. REV.	DATE PAGE REV.	ISSUE NO.
RSE-8 Contents	9-75	9-82		19
RSE-8C1	1-78			11
RSE-8D1	7-73	6-85		23
RSE-8D2	7-75	3-83		20
RSE-8D3	9-75	10-79		15
RSE-8D4	4-76			8
RSE-8D5	1-77			9
RSE-8E1	2-75	6-78		12
RSE-8E2	3-83			20
RSE-8F1	2-75			6
RSE-8G1	6-70			1
RSE-8H1	10-72			2
RSE 8H2	9-84			22
RSE-8J1	9-75	5-83		21
RSE-8J2	4-76	10-79		15
RSE-8K2	10-78			13
RSE-8M1	8-78	5-85		23
RSE-9 Contents	6-69	9-82		19
RSE-9A1	6-69	3-81	p.5-6, 9-82	19
RSE-9B1	6-69	5-85		23
RSE-9C1	6-69	1-78		11
RSE-9C2	6-69	8-79		14
RSE-9C3	6-69	1-78		11
RSE-9C4	6-69			1
RSE-9D1	6-69	9-75		7
RSE-10 Contents	8-79	9-82		19
RSE-10A1	8-79	3-84		21
RSE-10A2	8-79			14
RSE-10A3	8-79			14
RSE-10A4	8-79	8-80		16
RSE-10B1	8-79	5-85		23
RSE-10B2	8-79	8-80		16
RSE-10B3	8-79	8-80		16
RSE-10B4	8-79			14
RSE-10B5	8-79	4-84		21
RSE-10B6	8-79	3-84		21
RSE-10B7	8-79	8-80		16
RSE-10B8	8-79	8-80		16
RSE-10B9	8-79	8-80		16
RSE-10B10	8-79			14
RSE-10F1	9-80			16
RSE-11 Contents	9-82			19
RSE-11A1	3-81	2-83		20
RSE-11A2	3-84			21
RSE-11B1	3-84			21
RSE-11B2	3-84			21
RSE-11C1	4-84			21
RSE-11D1	3-84			21

SECTION	DATE ORIG.	DATE SECT. REV.	DATE PAGE REV.	ISSUE NO.
RSE-13 Contents		9-82		19
RSE-13A1	9-76	8-78		19
RSE-14 Contents	10-72	9-82		19
RSE-14A1	3-73			3
RSE-14A2	3-73			3
RSE-14A3	3-73			3
RSE-14A4	3-83			20
RSE-14B1	10-72	5-80		2
RSE-14B2	10-72			2
RSE-14C1	10-72			2
RSE-14D1	6-73	5-80		3
RSE-14D2	6-73	5-80		3
RSE-14D3	3-81			17
RSE-14D4	2-84			21
RSE-14E1	10-72			2
RSE-14F1	9-75	8-84		22
RSE-15 Contents	4-76	9-82		19
RSE-15A1	4-76			8
RSE-15A2	4-76			8
RSE-15A3	4-76			8
RSE-15A4	4-76			8
RSE-15A5	9-75	10-79		15
RSE-15A6	4-76			8
RSE-15A7	4-76	4-80		16
RSE-15A8	4-76			8
RSE-15B1	1-78	3-83		20
RSE-15D1	9-75			7
RSE-15E1	6-82			19
RSE-15E2	6-82			19
RSE-15E3	6-82			19
RSE-17 Contents	4-76	9-82		15
RSE-17A1	8-78	2-84		21
RSE-17A2	12-79	3-83		20
RSE-17B1	8-79			14
RSE-18 Contents	9-82			7
RSE-18A1	9-75			7

INDEX

RAILWAY SIGNAL EQUIPMENT

A

Adapter Brackets, Crossing Gate Arms RSE-10B10
Air Compressor Units RSE-3D6
Aluminum and Fiberglass Crossing Gate Arms RSE-10B9
Arresters, Lightning – USG-A RSE-17A1
Audio Frequency Overlay Track Circuit Equipment
AF-200W RSE-8D5
AFO-I RSE-8D3
AFO-IIC RSE-8D1
Audio Track Transceiver – ATT-10 . . . . . RSE-8D2
Automatic Train Stop – EM-1 . . . . . RSE-15B1
Automatic Vehicle Identification System (AVI) RSE-13A1
Axle Generator RSE-15A8

B

Bars, Point Detector RSE-3E5
Bases, Junction Boxes for 4 and 5 Inch Masts RSE-10B2
Bells, Grade Crossing RSE-10B4
Bootlegs RSE-9C4
Boxes, Junction
Base Mounted RSE-9C2
Pedestal Mounted RSE-9C1
Pipe Mounted RSE-9C3
Brackets, Adapter
Crossing Gate Arms RSE-10B10
Plug-In Relay Mounting RSE-4
Bulbs (See Lamps)

C

Cab Aspect Indicators RSE-15A4
Cab Signal Equipment Box, El RSE-15A2
Cab Signal Equipment Box with Overspeed, El RSE-15A3
Cab Signal System, El RSE-15A1
Cantilever Assembly RSE-10A4
Car Retarders
Model 67, Electro-Pneumatic RSE-14A1
Model 50-A, Weight Proportional RSE-14A2
Model 50-B RSE-14A3
Cases, Equipment
CS Cases RSE-9B1
17½" CS Cases RSE-9B2
Cross Reference Substitution Chart RSE-9B0
Circuit Controller, Sw. Machine RSE-3D1
Code Generator RSE-8K2
Coils, Locomotive Pick-Up RSE-15A6
Color Light Signals
Color Light & Marker Light Signal RSE-2B2
N-2 Color Light Dwarf Signal RSE-2C2
ES-20 Color Light Elec. Sw. Signals RSE-2C3
R-2 Color Light Signal Unit RSE-2D2
Compressor Units, Air RSE-3D6
Contact Springs, Plug-In Relay Receptacle RSE-4
Controller (See Circuit Controller)
Converter, F-40M DC/DC RSE-7B1
Cover Glass Assembly & Phankill Units RSE-2F1
Crimping Tools, Plug-In Relay RSE-4
Crossarms, Junction Box XA-120 . . . . . RSE-10B6
Crossing Bells RSE-10B4
Crossing Gate Arms (Aluminum & Fiberglass) RSE-10B9
Crossing Signs RSE-10B3

D

Detectors, SRD-5 Self-Restoring Dragging Equipment . . . RSE-8G1
Detection Equipment RSE-8

E

Electrocoder EC-10 Code Generator RSE-8K2
Equipment Boxes
El Cab Signal RSE-15A2
El Cab Signal Equipment Box with Overspeed RSE-15A3
Equipment Cases RSE-9
Equipment Houses RSE-9A1

F

Filter, Surge-Ripple RSE-8D4
Flashing Signal Light Assembly RSE-10A1
Flashing Signal Light Assembly with Model 75
Crossing Gate RSE-10A2
Flashing Signal Light Assembly with Junction Box
Crossarm RSE-10B5
Foundation Piers RSE-9D1
Frames, Shelf Mounting, Plug-In Relay RSE-4

G

Generator, Axle RSE-15A8

INDEX (Continued)

Grade Crossing Warning Equipment
Adapter Brackets for Crossing Gate Arms RSE-10B10
Aluminum & Fiberglass Crossing Gate Arms RSE-10B9
Flashing Signal Light Assembly RSE-10A1
Flashing Signal Light Assembly with Model 75 Crossing Gate RSE-10A2
Flashing Signal Light with Junction Box Crossarm . . RSE-10B5
Gate Mechanism & Components, Model 75 . . . . . RSE-10B8
Gate Mechanism with Stud Mast RSE-10A3
Grade Crossing Cantilever Assembly RSE-10A4
Grade Crossing Masts RSE-10B1
Grade Crossing Signs RSE-10B3
Grade Crossing Bell, BA-10 . . . . . RSE-10B4
Junction Box Bases for 4 and 5 Inch Masts RSE-10B2
Junction Box Crossarms, XA-120 . . . . . RSE-10B6
Signal Light Units, HC-120A, HC-100 . . . . . RSE-10B7

H

Hand Skate RSE-14C1
Hevi Car Kit for Models 31 and 32 Car Retarders RSE-14D1
Highway Grade Crossing (See Grade Crossing Protection)
Houses, Equipment HM RSE-9A1
Housings, Cases & Junction Boxes RSE-9

I

Impedance Bonds, AC & DC RSE-8M1
Indicators, Cab Aspect RSE-15A4
Inverters
F-80 . . . . . RSE-7C3
F-81 . . . . . RSE-7C1
F-82 . . . . . RSE-7C2

J

Junction Boxes
Base Mounted RSE-9C2
Bootleg RSE-9C4
Pedestal Mounted RSE-9C1
Pipe Mounted RSE-9C3

L

Lamps for Signal Light Applications RSE-17B1
Lightning Arresters – USG-A RSE-17A1
Lightning Arresters – USSP (Secondary Surge Suppressors) RSE-17A2
Line Relays (See Relays)
Lock Rods RSE-3E5
Lock Rod Connecting Rods RSE-3E5
Locks
Electric Switch – SL-6A RSE-3D3
Electric Switch – SL-21A RSE-3D4
Electric Switch – SL-25, SL-26 . . . . . RSE-3D5
Locomotive Pick-up Coils RSE-15A6

M

Machines, Switch (See Switch Machines)
Marker, HC-33 Signal Unit RSE-2D3
Masts, Grade Crossing RSE-10B1
Monitor, Presence PM-10 . . . . . RSE-8J2
Motion Monitor, MM-21, Track Circuit RSE-8J1

O

Operating Rods (See Rods, Switch Machine Operating)
OCS-10 Overlay Coded Signal System RSE-8K1

P

Phankill Units RSE-2F1
Piers, Foundation RSE-9D1
Point Detector Bars (See Bars, Point Detector)
Point Operating Rods (See Rods, Switch Machine Operating)
Power Supplies RSE-7
Presence Monitor, PM-10 . . . . . RSE-8J2

R

Radar Unit, DR-40 Gunn Diode Doppler RSE-14F1
Railroad Crossing (See Headings under Grade Crossing Control)

INDEX (Continued)

Rectifiers
- Constant Current
  - CCR-1, CCR-4, CCR-5 / CCR-6 . . . . . RSE-7A1
- Constant Potential
  - CPR-1, CPR-2, CPR-3, CPR-4 & CPR-6 . . . . . RSE-7A2

Relays, General Purpose (Non-Vital)
- General Purpose – LP-100 . . . . . RSE-6B1
- Ground Detector, Locomotive Control – GJS RSE-6C2
- Locomotive Control – GJ RSE-6C1
- Magnetic Stick – KP RSE-6A1
- Polar Biased – KP RSE-6A1

Relays, Vital Plug-In
- AC Vane – PV-250 . . . . . RSE-4C1
- Cab Signal, Delay Neutral DC – PN-59 . . . . . RSE-4H1
- Cab Signal, Neutral DC – PN-159B RSE-4H2
- Code Following – PC-250B RSE-4E2
- Code Following – High Efficiency – PC-250BAE, PC-250BE, PC-250PE RSE-4E2
- Code Following, Magnetic Stick – PC-250P RSE-4E2
- Code Transmitting – PC-250TR RSE-4E1
- Decoding, Biased DC – PN-150BC, PN-150BE, PN-250BE, PN-258BC RSE-4E1
- Decoding, Neutral DC – PN-150NE RSE-4E1
- Flasher, DC – PF-256 . . . . . RSE-4G1
- Light-Out – PN-150BL RSE-4C2
- Line, Biased DC – PN-150B, PN-150BD, PN-150BE, PN-250B, PN-250BE RSE-4A1
- Line, DC – PN-150HD RSE-4A1
- Line, Neutral DC – PN-150N, PN-150NE RSE-4A2
- Line, Magnetic Stick – PP-151 . . . . . RSE-4A1
- Line, Slow Dropaway – PN-150BSR, PN-259BSR, PN-259SRA RSE-4A3
- Line, Slow Dropaway & Pickup – PN-258BSR RSE-4A3
- Line, Slow Pickup – PN-258B RSE-4A3
- Power Switching – PN-250P RSE-4C2
- Power Transfer – PN-150P RSE-4C2
- Power, Two Rate Charge – PN-156 . . . . . RSE-4C2
- Switch Control – PN-150BM RSE-4D1
- Switch Control, Magnetic Stick – PP-151 . . . . . RSE-4D1
- Switch Control, Overload – PA-150SO, PN-150SO, PN152SO RSE-4D2
- Time Element – PN-150T, PT-150 . . . . . RSE-4F1
- Track, Biased DC – PN-150BTR RSE-4B1
- Track, Biased DC – Quick Shunting – PN-150BQS . . RSE-4B1
- Track, High Dropaway – PN-150BH RSE-4B1

Relays, Vital Shelf RSE-5
- Code Following – CD, CDD RSE-5D2
- Code Following, High Efficiency – P-4 . . . . . RSE-5D2
- Code Following, Magnetic Stick – CDP RSE-5D2
- Code Following, Mechanically Tuned – CD-F RSE-5D2
- Code Transmitting – DM RSE-5D1
- Flasher – FN-16A, FN-28 . . . . . RSE-5E1
- Light-Out – DN-11L, DN-22L RSE-5C1
- Line, Biased DC – DC-11B, DN-22B RSE-5A5
- Line, Neutral DC – DN-11, DN-22A RSE-5A1
- Line, Neutral DC, Approach Lighting – DNL-4 . . . . RSE-5A4
- Line, Neutral DC, Slow Dropaway – DN-11, DN-18, DN-19, DN-22A RSE-5A2
- Line, Polarized DC – DP-14, DP-17 . . . . . RSE-5A6
- Line, Polarized DC Retained Neutral – DP-20, DP-21 . RSE-5A6
- Power Transfer – DN-11P, DP-22P RSE-5C1
- Switch Control, Overload DC – OR-11 . . . . . RSE-5F1
- Switch Control, Polarized – DP-25 . . . . . RSE-5F1
- Time Element – DT-10, TH-10 . . . . . RSE-5G1
- Track, Biased DC – DN-11B, DN-22B RSE-5B3
- Track, Biased DC, High Dropaway – DN-22BH RSE-5B3
- Track, Neutral DC – DN-11, DN-22 . . . . . RSE-5B1
- Track, Neutral DC Approach Lighting – DNL-4 . . . . RSE-5B2
- Track, Polarized DC – DP-14 . . . . . RSE-5B4
- Track, Polarized DC, Retained Neutral – DP-20 . . . . RSE-5B4

Retarder Modification Kits
- Hevi Car Kit Models 31 and 32 . . . . . RSE-14D1
- Short Stroke Kit Models 31 and 32 . . . . . RSE-14D2

Retarder Valves
- Control – HS-2 . . . . . RSE-14B1
- Exhaust – X-2 . . . . . RSE-14B2

Retarders
- Electro-Pneumatic – Model 67 . . . . . RSE-14A1
- Car Retarder – Model 50-B RSE-14A3
- Weight Proportional – 50-A RSE-14A2

Retarder & Yard Equipment RSE-14

Rods, Lock RSE-3E5

Rods, Lock Rod Connecting 3E5

Rods, Switch Machine Operating Rubber Mounted 3E2

Rods, Swivel Front for Switches 3E4

Roller Bearing Assembly for Switches 3E3

S

Signal Assemblies, Grade Crossing
- Flashing Signal Light RSE-10A1
- Flashing Signal Light with Model 75 Crossing Gate . RSE-10A2
- Flashing Signal Light with Junction Box Crossarm . . RSE-10B5

Signal Light Units, HC-120A, HC-100 . . . . . RSE-10B7

Signals
- Color Light & Marker Light RSE-2B2
- ES-20 Color Light Electric Switch RSE-2C3
- H-2 Searchlight Dwarf RSE-2C1
- H-2 Searchlight Signal Units RSE-2D1
- HC-33 Marker Light Signal Unit RSE-2D3
- N-2 Color Light Dwarf Signals RSE-2C2
- Searchlight & Marker Light RSE-2B1
- Style R-2 Color Light Signal Unit RSE-2D2

Signs, Grade Crossing RSE-10B3

Skates, Hand RSE-14C1

Speed Detector, DR-40 Gunn Diode Doppler Radar Unit RSE-14F1

Speedometer RSE-15A7

Stick Relays (See Relays, Non-Vital: Relays, Vital, Plug-In Relay, Vital Shelf)

Surge-Ripple Filter RSE-8D4

Surge-Suppressors, Secondary RSE-17A2

Switch Locks
- Electric, SL-6A RSE-3D3
- Electric, SL-21A RSE-3D4
- Electric, SL-25 & SL-26 . . . . . RSE-3D5

Switch Valve, CP RSE-3D2

Switch Machines
- Mainline, Electric – M-3, M-23A, M-23B RSE-3A1
- Mainline, Electro-Pneumatic – A-5 . . . . . RSE-3A2
- Mainline, Hand Operated – T-20, T-21 . . . . . RSE-3A4
- Transit, Electric – M-4 . . . . . RSE-3C2
- Transit, Electro-Pneumatic – A-10 . . . . . RSE-3C1
- Yard, Electric – YM-2 . . . . . RSE-3B3
- Yard, Electro-Pneumatic – DA-10 . . . . . RSE-3B1
- Yard, Electro-Pneumatic – NA-15 . . . . . RSE-3B4

Switch Rods
- Rubber Mounted RSE-3E2
- Standard RSE-3E1

Swivel Front Rods for Switches RSE-3E4

INDEX (Continued)

T

Target Staffs, Switch Machine – T-20, T-21 . . . . . RSE-3A4
Test Plugs, Plug-In Relays RSE-4
Tie Rods, Foundation Pier Mounting RSE-9D1
Tools
  Crimping Relays RSE-4
  Maintenance, for Plug-In Relays PN-150 & PN-250 . RSE-18A1
Track Circuits, Train Detection
  AF-200 W Audio Frequency Transit
    Track Circuit System RSE-8D5
  Audio Frequency Overlay – AFO-I RSE-8J1
  Audio Frequency Overlay – AFO-IIC RSE-8D1
  Audio Track Transceiver, ATT-10 . . . . . RSE-8D2
  Fr-Hi Shunt RSE-8F1
  High Frequency Track Circuit RSE-8E1
  AW-10 Directional Area Warning Device
    (Grade Crossing Warning) RSE-8E2
  Type C Track Circuit RSE-8C1
  Motion Monitor Track Circuit, MM-21 . . . . . RSE-8J1
  Track Relays (See Relays, Vital Plug-In or Relays, Vital Shelf)
Train Control Systems RSE-15
  Cab Signal Equipment Box, EI RSE-15A2
  Cab Signal Equipment Box with Overspeed, EI RSE-15A3
  Cab Signal System, EI RSE-15A1
  Converter, DC/DC, F-42 . . . . . RSE-15A5
  Test Set, 6-Code RSE-15D1
  EM-1 Automatic Train Stop RSE-15B1
Train Detection Systems RSE-8
  Audio Frequency Overlay, AFO-I RSE-8D3
  Audio Frequency Overlay, AFO-IIC RSE-8D1
  Audio Track Transceiver, ATT-10 . . . . . RSE-8D2
  Dragging Equipment Detector, SRD-5 . . . . . RSE-8G1
  Fr-Hi Shunt RSE-8F1
  High Frequency RSE-8E1
  AW-10 Directional Area Warning Device
    (Grade Crossing Warning) RSE-8E2
  Motion Monitor Track Circuit, MM-21 . . . . . RSE-8J1
  Presence Monitor, PM-10 . . . . . RSE-8J2
  Wheel Detectors, WD-30, WD-30D RSE-8H1
Transformers
  Cross Reference Substitution Chart RSE-7D0
  Transformer – W-400 . . . . . RSE-7D1
  Transformer – W-800 . . . . . RSE-7D2

V

Valves
  Retarder Control – HS-2 . . . . . RSE-14B1
  Retarder Exhaust – X-2 . . . . . RSE-14B2
  Switch Machine – CP RSE-3D2

W

Weight Detection Rails RSE-14E1
Wheel Detector, WD-20 and WD-30D RSE-8H1

GENERAL INFORMATION

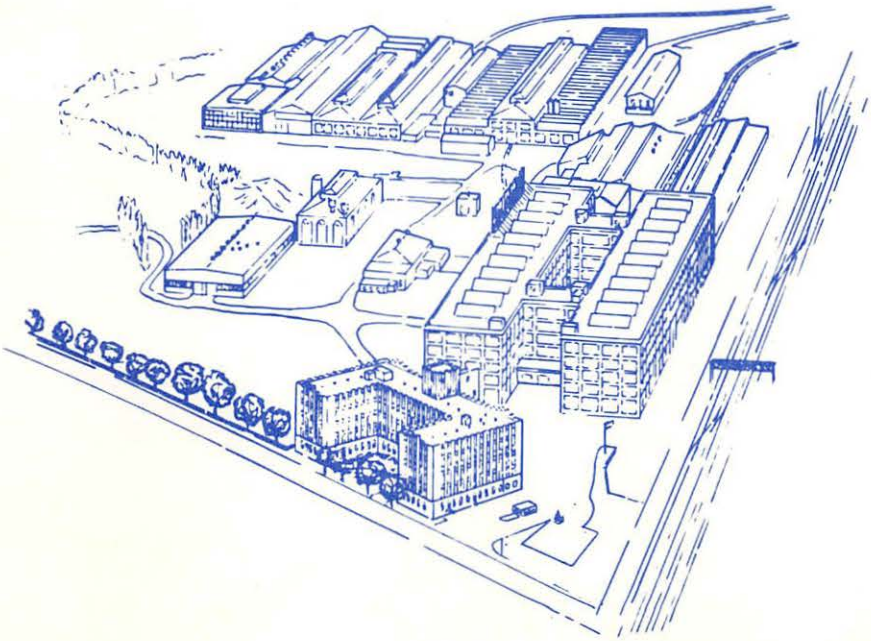

GENERAL INFORMATION

General Information RSE-1A1
Terms and Conditions RSE-1B1

INTRODUCTION

This catalog is designed for those persons involved in the design of circuits and systems for railway signal and control systems and all those who may at anytime be involved in ordering signal materials such as purchasing, storekeeper, and maintenance personal.

The catalog covers the complete standard line of U S & S manufactured equipment, however no attempt has been made to cover all the variety of equipment such as that required for specialized applications.

The equipment featured in this catalog has been manufactured utilizing the latest production and technological techniques with emphasis on quality, reliability, and serviceability.

MAJOR CATEGORIES

The products shown in this catalog have been arranged by family groups that are identified by generic name rather than style or type designation. This approach has been employed to insure maximum utility from the user's viewpoint. A list of the major categories follows:

RSE-1	General Information
RSE-2	Signals
RSE-3	Switches
RSE-4	Relays, Plug-in
RSE-5	Relays, Shelf
RSE-6	Relays, General Purpose
RSE-7	Power Supplies
RSE-8	Train Detection Systems
RSE-9	Houses, Cases, and Junction Boxes
RSE-10	Grade Crossing Warning Equipment
RSE-11	Supervisory, Code, and Data Systems
RSE-12	Control Panels, Consoles, and Display Devices
RSE-13	Identification Systems
RSE-14	Retarders and Yard Equipment
RSE-15	Train Control
RSE-16	Vehicle Control Systems
RSE-17	Accessories
RSE-18	Tools

EXPLANATION OF NUMBERING SYSTEM

A numbering system has been instituted as a means of establishing the sequence of the catalog sections within the catalog and each major category. An explanation of this system follows:

1. The letters RSE stand for Railway Signal Equipment.
2. The numeral immediately following the letters RSE identifies a major equipment category; i.e. numeral 9 for Houses, Cases, and Junction Boxes. The numeral also designates the location of the category. For example, RSE-1 would identify the first major category in the catalog, RSE-2 the second, and RSE-3 the third, and so forth. In this example, RSE-9 would be the ninth category.
3. The functional group under each major category is designated sequentially by alphabetic letters in caps. For example, RSE-9A is the first functional group under the ninth equipment category. RSE-9B would identify the second functional group, and so forth.
4. The individual catalog sections under each functional group are sequentially numbered 1, 2, 3, 4, etc.

RSE-	9	A	1
	↑	↑	↑
	MAJOR CATEGORY	FUNCTIONAL GROUP	CATALOG SECTION

HOW TO USE THE CATALOG

There are basically two simple ways of using this catalog: A master index included as part of "General Information" cross references specific parts and products alphabetically by name. Their location in the catalog will be designated by **RSE No.**, indicating where the specific part of product may be found.

To locate a product to suit a particular application, use the following method: (a) locate the major category into which the product fits by checking through the blue tabs separating the major categories, (b) once a major category is located, check the contents page behind the blue tab to determine the functional group in which the product follows, (c) check for the individual catalog sections within the appropriate functional group for product information.

Ordering information for all directly related parts and accessories, i.e. lamps for signals, fittings and foundation piers for housings, etc., are located and listed in the major category where they are used.

HOW TO ORDER

If required, specific ordering information is covered for the product in the RSE Section. In general, any item shown in this catalog should be ordered by Part No. and brief description.

Address all orders to:

Union Switch & Signal Division
American Standard Inc.
Swissvale, PA 15218

TERMS AND CONDITIONS

All sales of goods by American Standard Inc. acting through its Union Switch & Signal Division are made solely upon the following terms and conditions:

1. **ORDERS:** This quotation is not an offer and no binding contract of purchase/sale will be effected until your order is accepted in whole or in part by us. Terms and conditions on your order form at variance with terms and conditions stated herein are binding upon us only if specifically accepted by us in writing. After acceptance, you may modify or cancel your order only upon written notice and payment to us of our costs resulting therefrom. Any order amounting to less than $50 will be billed at $50.00

2. **PRICE:** Unless otherwise stated prices quoted are net F.O.B. our factory and firm for thirty (30) days. If specifications are changed after price is quoted, such price may be adjusted by us.

3. **TERMS OF PAYMENT:** Unless otherwise stated, all invoices will be rendered when goods are shipped and are due and payable net thirty (30) days, two percent (2%) discount fifteen (15) days from date of invoices. For each thirty (30) days, or part thereof, that an invoice remains overdue, you will be charged interest on the unpaid balance at the maximum lawful rate. Partial shipments may be made at our option if all items are not shipped on the same date pro rata invoices will be rendered. If engineering design is part of the order monthly progress payments will be required.

   Unless you have an established credit rating with us, cash must accompany your order or shipment will be COD. Our determination of your financial responsibility will be final.

   If you are responsible for any delay in shipment, the date of completion of goods may be treated by us as the date of shipment for purposes of payment. Completed goods shall be held at your cost and risk and we shall have the right to bill you for reasonable storage and insurance expenses.

4. **TAXES:** Prices exclude all duties, taxes or other governmental charges which now are or hereafter may be imposed upon the sale or use of the goods herein. All such taxes or other charges paid by us shall be for your account. Any exemption claimed from the application of such taxes or charges should be plainly designated on the face of the orders placed with us and accompanied by exemption certificates where the law so requires.

5. **DELIVERY:** Shipment, delivery, and installation dates are estimated dates only, and unless otherwise specified, are calculated from the date of receipt of complete technical data and approved drawings, as appropriate. In estimating such dates, no allowance has been made, nor shall we be liable directly or indirectly for delays of carriers or delays from labor difficulties, shortages, strikes or stoppages of any sort, fires, accidents, failure or delay in obtaining materials or manufacturing facilities, acts of government affecting us directly or indirectly, bad weather, or any causes beyond our control or causes designated Acts of God or force majeure by any court of law and when such delays arise, the estimated delivery date shall be extended accordingly. We will not be liable for any damages or penalties whatsoever, whether direct, indirect, special or consequential, resulting from our failure to perform or delay in performing unless otherwise agreed in writing by an authorized officer or his designee.

   The date of delivery is the date of delivery by us to the initial carrier and as of this date, risk of loss is transferred to you. You are solely responsible for claims for loss or damage in transit. Claims for errors or shortages in shipments must be submitted to us, with adequate substantiation, within thirty (30) days after receipt.

6. **SOFTWARE:** We hereby grant to you a non-exclusive, non-transferrable right to use the software (which shall mean and include programs, data base and related technical documentation), if any, which may be furnished by us with, or may be incorporated in, the goods supplied hereunder. The software is our proprietary information which you shall keep confidential. You shall assist in protecting the software by permitting inspection of any location where the software is used or kept and by notifying us promptly upon discovering unauthorized possession, use or knowledge of the software.

   The software may be used only in accordance with our instructions and with the goods supplied hereunder, and may not be copied or modified without our prior written approval.

   The license granted hereby shall remain in force until the use of the goods supplied hereunder ceases or until terminated by written notice for your failure to perform any obligation hereunder, your attempt to transfer this license or your insolvency or bankruptcy. Upon termination, you shall immediately cease using the software and return the software to us.

7. **WARRANTY:** Items of equipment and parts manufactured by us are warranted to conform to our published specifications and to be free from defects in workmanship and material under normal and proper use and service. We will repair or replace, at our option and expense, and return to you F.O.B. our factory, transportation charges prepaid, any such item or part which breaches this warranty within one (1) year after shipment to you provided that you promptly give notice to us of such breach, return such item or part to us, transportation charges prepaid, with a completed US&S form 1779-H "Return Material Report", and upon examination we confirm said breach. Items of equipment and parts manufactured by others and furnished by us are warranted only to the extent of the original manufacturer's warranty.

   Systems designs and software (if any) furnished by us for this order are warranted to conform to our published specifications therefor or to the technical description prepared by us for this order. We will correct at our expense any defect in said design or software that results in a breach of this warranty under normal and proper use and service within one (1) year after first placing the design or software in service provided that you promptly give notice to us of such breach and you can recreate, under actual operating conditions, the condition which constitutes the alleged breach.

   All warranties shall be void and we shall not be responsible for any item, part, design or software that, after shipment or installation, is altered, tampered with, or repaired by anyone except personnel authorized by us; that is used under conditions varying materially from existing industry standards; that is damaged or fails to operate properly due to abrasion, corrosion or the influence of foreign energy or matter; or that proves unsuitable in an application of your choosing or a system of your design.

   An item, part, design or software which is repaired, replaced or corrected hereunder is warranted only for the remainder of the original warranty period. If repair, replacement or correction of a part of an item, design or software eliminates a warranty related problem, then the item, design or software will not be condemned hereunder.

   The foregoing obligations are expressly in lieu of all other warranties, guarantees, obligations or liabilities, express or implied by statute or otherwise. IN PARTICULAR THERE SHALL BE EXCLUDED THE IMPLIED WARRANTY OF MERCHANTABILITY AND THE IMPLIED WARRANTY OF FITNESS FOR A PARTICULAR PURPOSE. We shall not in any event be liable for any cost or expense, including labor, in connection with removal or reinstallation; for indirect, incidental or consequential damages of any kind; nor for any claims arising out of the supply or use of items, designs or software furnished hereunder, except as set forth herein.

8. **REJECTION/RETURNS:** Goods may be rejected for cause only if you notify us in writing within thirty (30) days after delivery. Failure to provide such notification constitutes acceptance of the goods. Goods may be returned for credit only with our prior written approval. Only standard goods may be returned. A minimum charge of 15% for restocking and reconditioning will be deducted. You must pay transportation charges for returned goods.

9. **PATENTS:** We will indemnify you from claims, suits, or actions by third parties that any item, or any part thereof, sold by us to you in and of itself infringes any United States patent if within thirty (30) days you notify us in writing of any such claim and give us authority, information, and assistance (at our expense) to dispose of such claim, and to defend any suit that may be brought against you thereon. In that event we will, at our expense, defend any such suit and satisfy any judgement therein to an amount not exceeding the price paid us for said item held to infringe. If, in any such suit, an injunction is issued against the further use of said item or any part thereof, we will at our option and expense, either procure for you the right to continue using said item or will (if you give, at our expense, such assistance as may be reasonably requested) replace the same with non-infringing items or modify it so that it becomes non-infringing or remove said item and refund the purchase price and the transportation and installation costs thereof. The foregoing expresses all of our obligations and liabilities as to patents.

10. **INSPECTION AND TESTS:** Inspection of goods in our plant by you or your representative will be permitted provided that this does not interfere with production and details of the proposed inspection are submitted to us in writing in advance. Goods and components thereof will be tested in accordance with our standard quality assurance procedures. If acceptable to us, additional tests may be conducted at your expense.

11. **SPECIAL JIGS, FIXTURES AND PATTERNS:** Unless supplied by you, any jigs, fixtures, patterns, design engineering and the like which are used for your order will remain our property without credit to you. We will have the right to discard and scrap them after they have been inactive for one (1) year without credit to you provided that you are given notice and opportunity to buy them before discarding or scrapping.

12. **RECORDS, AUDITS AND PROPRIETARY DATA:** Unless otherwise specifically agreed to in writing signed by an authorized officer, neither you nor any representative of yours, not any other person shall have any right to examine or audit our cost accounts, books or records of any kind or on any matter, or be entitled to or have control over any engineering or production prints, drawings or technical data which we, in our sole discretion, may consider in whole or in part proprietary to ourselves.

13. **APPLICABLE LAW:** The rights and duties of the parties shall be governed by the laws of the Commonwealth of Pennsylvania.

SIGNALS

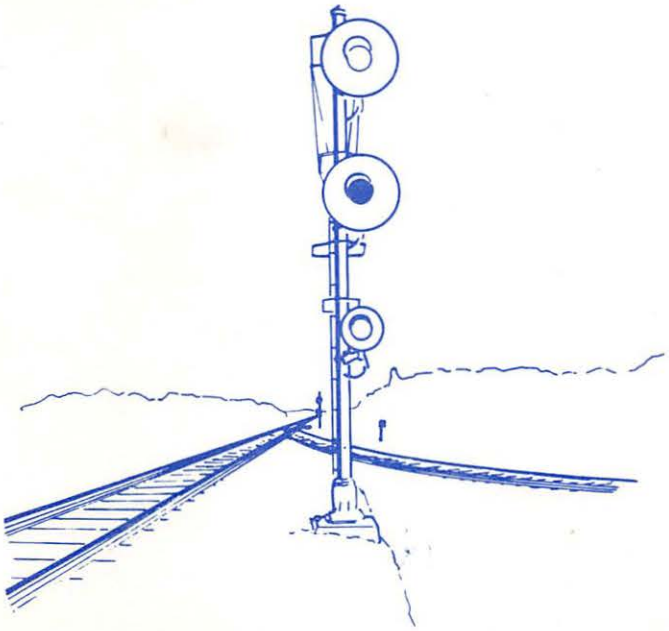

RSE-2

SIGNALS

MAINLINE SIGNAL ASSEMBLIES

Searchlight and Marker Light Signal Units RSE-2B1
Colorlight and Marker Light Signal Units RSE-2B2

DWARF SIGNAL ASSEMBLIES

H-2 Searchlight Dwarf Signals RSE-2C1
N-2 Color Light Dwarf Signals RSE-2C2
ES-20 Color Light Electric Switch Signals RSE-2C3

SIGNAL UNITS

H-2 Searchlight Signal Units RSE-2D1
MCL-100 Modular Color Light Signal Units RSE-2D2
MCL-101 Marker Light Signal Unit RSE-2D3

SIGNAL ACCESSORIES

Inclined Cover Glass Assembly and Phankill Units RSE-2F1

MAINLINE SIGNAL ASSEMBLIES
SEARCHLIGHT & MARKER LIGHT SIGNAL UNITS

Mainline Signal Assemblies, utilizing the popular H-2 Searchlight Unit and/or MCL-101 Marker Light Unit, are available to suit most standard applications. These signal assemblies are available in 14', 17', 22', and 27' heights, with 1, 2 or 3 light units. All components and masts are pre-drilled enabling quick and easy erection.

Time-honored US&S quality is your assurance of a reliable and efficient mainline signal assembly that will provide years of trouble-free operation.

For Mainline Signal Assemblies utilizing US&S'S MCL-100 Color Light Units, refer to catalog section RSE-2D2.

INTRODUCTION

The standard signal assemblies shown in this catalog section have been arranged to provide maximum ease and flexibility in ordering. Each signal assembly consists of (1) Aluminum or steel Mast and Ladder Assembly; (2) H-2 Searchlight Signal Unit and/or MCL-101 Marker Light Signal Unit; and (3) Standard Installation Material.

Because of the many possible combinations, signal light units are listed in separate catalog sections for quick and easy reference and ordering. Included in these sections are optional items, hoods, backgrounds, and material required to mount and install the specific light unit. The mast and ladder required for a specific installation is covered in this catalog section.

MAST AND LADDER ASSEMBLY

Aluminum masts with galvanized steel ladders are available for signal heights of 17' and 22'. Steel masts with galvanized steel ladders are available for signal heights of 17', 22' and 27'.

The 17' masts are designed for mounting one or two searchlight units or marker lights. The 22' and 27' assemblies are designed for mounting one, two, or three searchlight units or marker light unit combinations.

Aluminum masts are fabricated from 6" aluminum pipe. Steel masts are fabricated from standard 5" steel pipe posts with the exception of the 27' signal assembly mast, which is a standard 5" pipe post in the upper section fitted into a 6" pipe post in the lower section. This arrangement provided added strength for the height.

The aluminum or steel mast comes with a junction box base. Base mounting dimensions are shown in the illustration on page 2.

The galvanized steel ladder assemblies consist of ladder sections, platforms, hand rail ladder stays, and if specified, foundation piers. Ladder assemblies illustrated on pages 4 and 6 show three signal units with related ladder platforms. If less than three signal units are to be supplied, a ladder stay is furnished in place of a platform.

FEATURES

- Factory-fitted components make erection easy.
- All assemblies comply with AAR and state requirements.
- Many combinations available.
- Custom ordered to suit your particular requirements.
- Mast heights to 27 feet.

SIGNAL UNITS

The aluminum signal units used with the assemblies shown in this Catalog Section are the popular H-2 Searchlight Signal Unit, and the MCL-101 Marker Light. The MCL-101 Marker Light may be used in place of any of the searchlight units for single indication units. Refer to applicable catalog section for detailed information on the signal light units.

MOUNTING HARDWARE AND INSTALLATION MATERIAL

Mounting hardware and installation material, e.g., mounting brackets, clamps, etc. apply to the specific signal light unit. Description and details of these items are contained in the catalog section for that unit. Refer to applicable catalog sections for detailed information on these items.

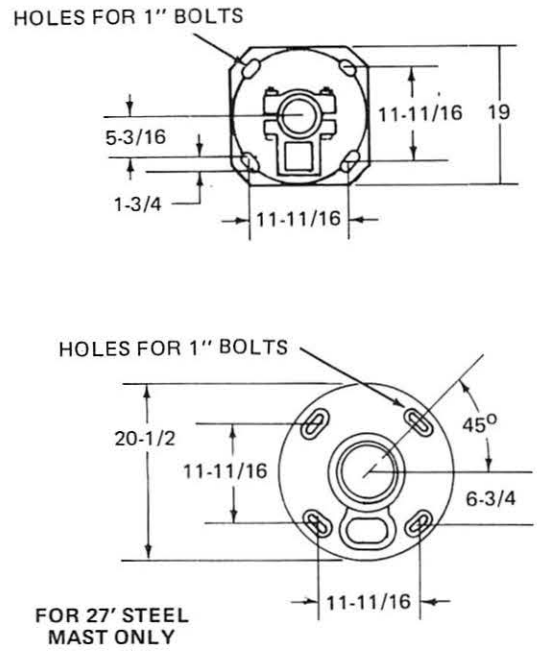

ALL DIMENSIONS ARE IN INCHES.

BASE MOUNTING DIMENSIONS

MAINLINE COLOR LIGHT SIGNAL ASSEMBLIES

ORDERING INFORMATION

The following pages illustrate the searchlight and marker light signal assemblies available. These assemblies are ordered by individually ordering the mast and ladder, and searchlight and/or marker light units with mounting hardware and installation material. Order as follows:

1. Determine number of signal light units required.

2. Refer to the illustrations on the following pages and select height of mast required.

   For example, if you require three signal light units, you must order either the 22' or 27' mast and ladder assembly.

   Aluminum masts and ladders are available in 17' and 22' heights only; steel mast and ladders are available in 17', 22', and 27' heights.

3. Order Mast and Ladder assembly from this catalog section. Quantities required for the assembly desired is shown in the tabulation following.

4. Order H-2 Searchlight Signal Light Units from catalog section RSE-2D1. Optional equipment and installation material can also be found in this section.

5. Order MCL-101 Marker Light Signal Unit from Catalog Section RSE-2D3. Optional equipment and installation material can also be found in this section.

NOTES: If the Signal Light assembly desired cannot be obtained from the standard assemblies, consult your nearest US&S representative for additional information.

For Ordering Information on Mainline Signal Assemblies using R-2 Color Light Signal Units, refer to Catalog Section RSE-2B2.

STANDARD MAINLINE COLOR LIGHT SIGNAL ASSEMBLIES

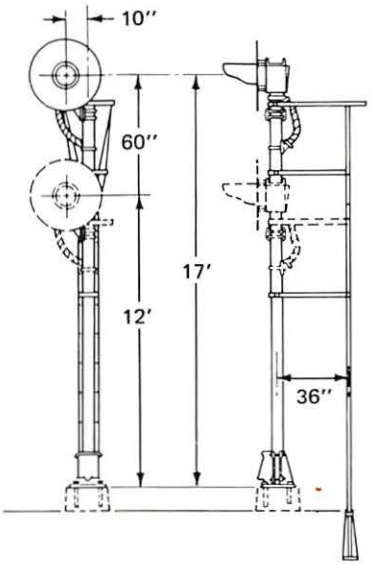

17' MAINLINE COLOR LIGHT
SIGNAL ASSEMBLY — 1 OR 2 UNITS.

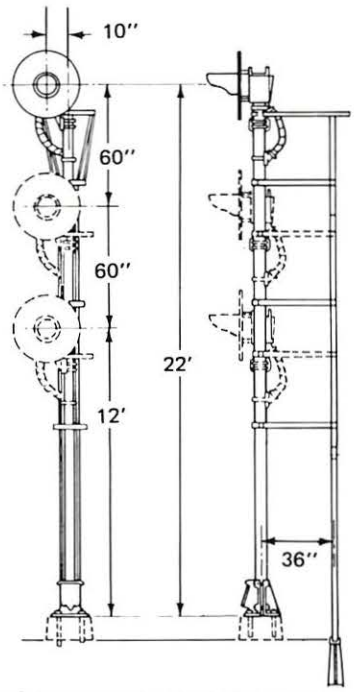

22' MAINLINE COLOR LIGHT
SIGNAL ASSEMBLY — 1,2 OR 3 UNITS.

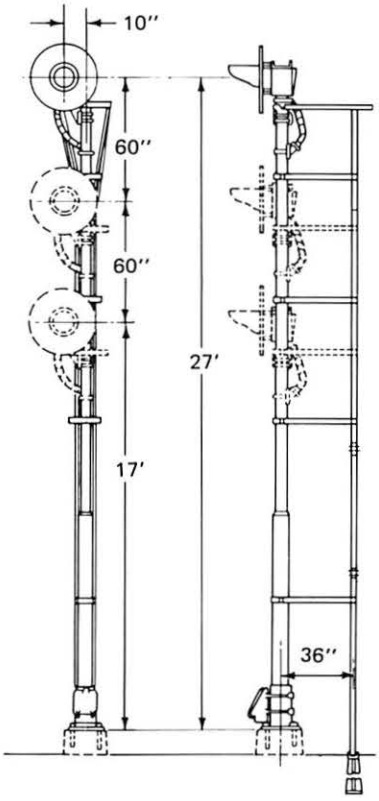

27' MAINLINE COLOR LIGHT
SIGNAL ASSEMBLY — 1,2 OR 3 UNITS.

TYPICAL 3-UNIT, 22 FT. SIGNAL ASSEMBLY (ALUMINUM MAST)

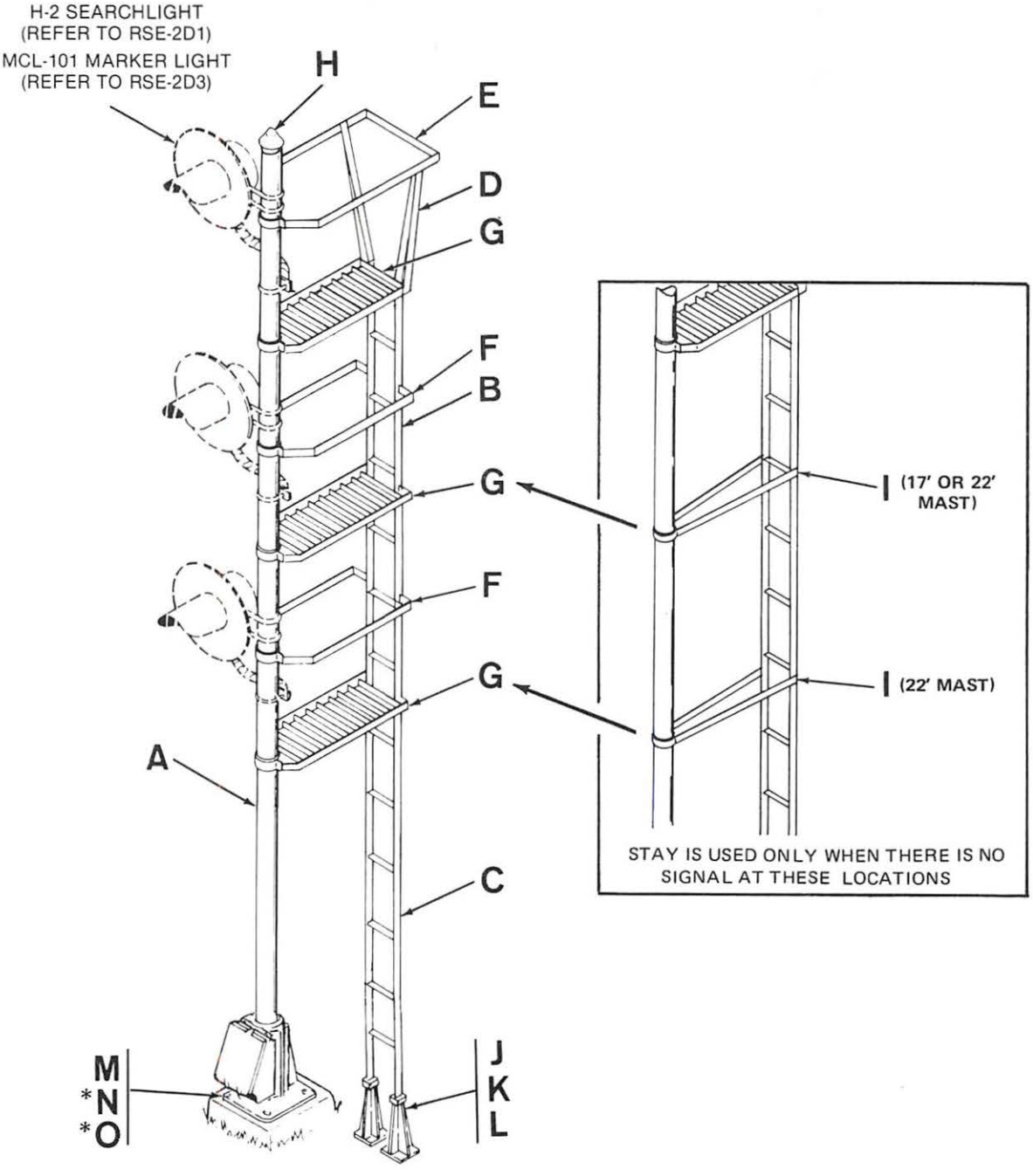

*OPTIONAL, SUPPLIED ONLY WHEN SPECIFIED

ALUMINUM MASTS AND LADDERS

REF.	PART NO.	DESCRIPTION	17 FT. UNITS 1	17 FT. UNITS 2	22 FT. UNITS 1	22 FT. UNITS 2	22 FT. UNITS 3
A	N451394-1001	MAST, 6″ AL PIPE, with junction box clamp base, 24 terminal posts	1				
A1	N451394-1101	MAST, 6″ AL PIPE, with junction box clamp base, 24 terminal posts		1			
A2	N451394-1301	MAST, 6″ AL PIPE, with junction box clamp base, 24 terminal posts			1		
A3	N451394-1201	MAST, 6″ AL PIPE, with junction box clamp base, 24 terminal posts				1	
A4	N451394-1801	MAST, 6″ AL PIPE, with junction box clamp base, 24 terminal posts					1
B	N377906-001	LADDER, TOP SECTION	1	1	1	1	1
C	N377872-001	LADDER, BOTTOM SECTION	1	1			
C1	N377876-001	LADDER, BOTTOM SECTION			1	1	1
D	N377932-001	BRACE (when non-extended top platform is used)	2	2	2	2	2
D1	N377930-001	BRACE (when extended top platform is used)	2	2	2	2	2
E	N451438-0201	HANDRAIL, TOP	1	1	1	1	1
F	N451438-0301	HANDRAIL, BOTTOM		1		1	2
G	N128490-001	PLATFORM (non-extended—used when signal units are mounted side of mast)	1	2	1	2	3
G1	N303733-001	PLATFORM (extended—used when signal units are mounted front of mast)	1	2	1	2	3
H	N437391-001	CAP, PIPE	1	1	1	1	1
I	N434461	STAY, LADDER	1		2	1	
J	M062563	PIER, LADDER	2	2	2	2	2
K	J466076-0120	BOLT, HEX HD, 1/2″ x 1-1/4″ (galv.)	4	4	4	4	4
L	J480210-0105	NUT, HEX 1/2″ (galv.)	4	4	4	4	4
*M	M254806	BOLT, FDN, 1″ x 24″ (galv.)	4	4	4	4	4
*N	J480210-0159	NUT, HEX, 1″ (galv.)	4	4	4	4	4
*O	J475132-0121	WASHER, 1″ stl. pl. (galv.)	4	4	4	4	4

*Foundation hardware is optional and is supplied only if specified on the order.

TYPICAL 3-UNIT, 27 FT. SIGNAL ASSEMBLY (STEEL MAST)

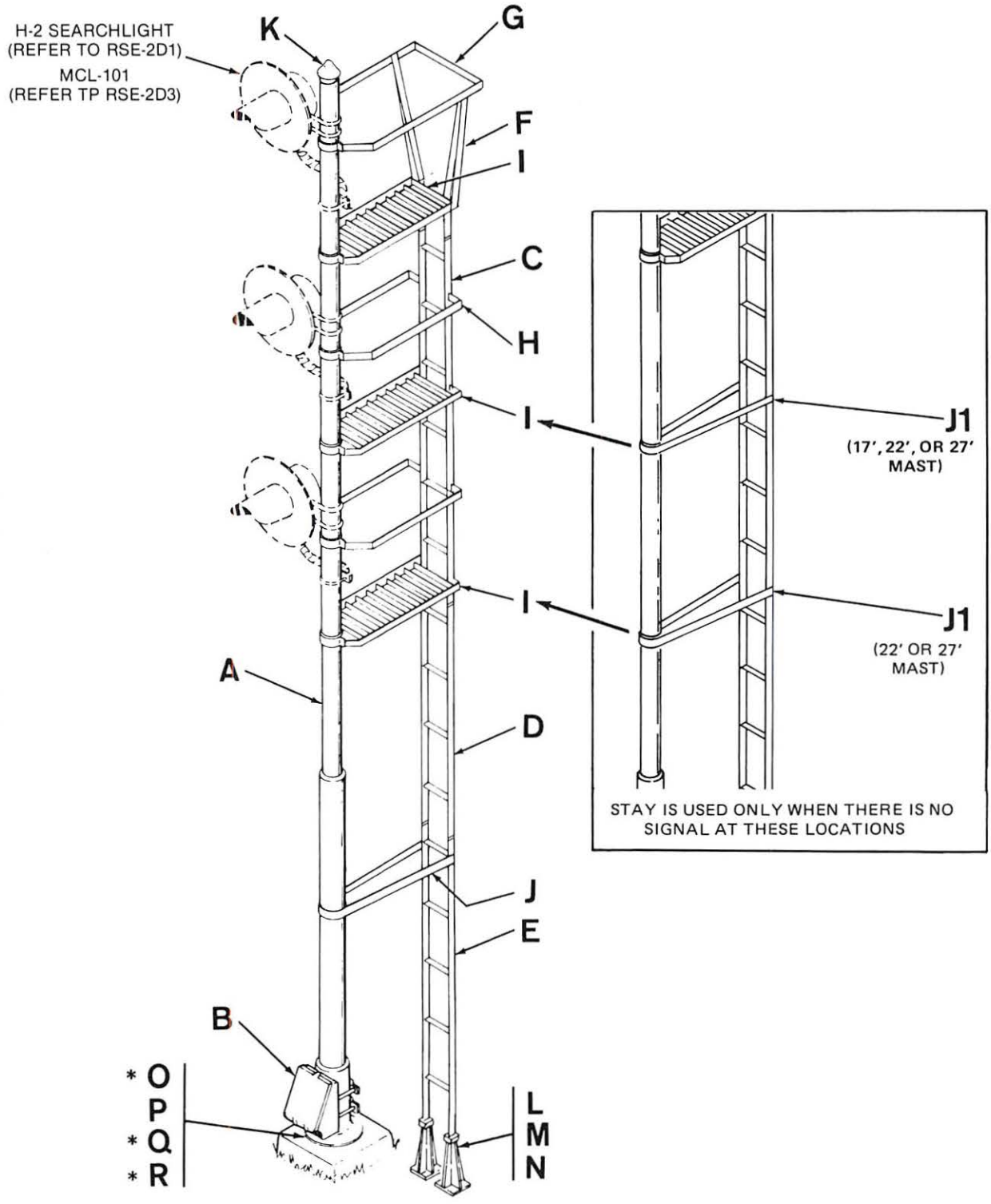

*OPTIONAL, SUPPLIED ONLY WHEN SPECIFIED.

STEEL MASTS AND LADDERS

REF.	PART NO.	DESCRIPTION	17 FT. UNITS 1	17 FT. UNITS 2	22 FT. UNITS 1	22 FT. UNITS 2	22 FT. UNITS 3	27 FT. UNITS 1	27 FT. UNITS 2	27 FT. UNITS 3
A1	N377691	MAST, 5″ STEEL PIPE, with junction box clamp base, 24 term. posts	1							
A2	N377693	MAST, 5″ STEEL PIPE, with junction box clamp base, 24 term. posts		1						
A3	N377697	MAST, 5″ STEEL PIPE, with junction box clamp base, 24 term. posts			1					
A4	N377699	MAST, 5″ STEEL PIPE, with junction box clamp base, 24 term. posts				1				
A5	N377701	MAST, 5″ STEEL PIPE, with junction box clamp base, 24 term. posts					1			
A6	N377703	MAST, 5″ or 6″ STEEL PIPE, with base arranged for junction box						1		
A7	N377705	MAST, 5″ & 6″ STEEL PIPE, with base arranged for junction box							1	
A8	N377707	MAST, 5″ & 6″ STEEL PIPE, with base arranged for junction box								1
B	N212958	JUNCTION BOX BASE, 24 term. posts, for use with A6, A7, or A8						1	1	1
B1	M104294	CLAMP, HALF						2	2	2
B2	M104873	BOLT, HOOK, 3/4″						4	4	4
B3	J048026	NUT, HEX 3/4″ (cad. pl. C.L.)						4	4	4
C	N377906	LADDER, TOP SECTION	1	1	1	1	1	1	1	1
D	N377874	LADDER, MIDDLE SECTION						1	1	1
E	N377872	LADDER, BOTTOM SECTION	1	1						
E1	N377876	LADDER, BOTTOM SECTION			1	1	1	1	1	1
F	N377932	BRACE (when non-extended top platform is used)	2	2	2	2	2	2	2	2
F1	N377930	BRACE (when extended top platform is used)	2	2	2	2	2	2	2	2
G	N377650	HANDRAIL, TOP	1	1	1	1	1	1	1	1
H	N377653	HANDRAIL, BOTTOM AND MIDDLE		1	1	1	2		1	2

STEEL MASTS AND LADDERS

REF.	PART NO.	DESCRIPTION	17 FT. UNITS 1	17 FT. UNITS 2	22 FT. UNITS 1	22 FT. UNITS 2	22 FT. UNITS 3	27 FT. UNITS 1	27 FT. UNITS 2	27 FT. UNITS 3
I	N116628	PLATFORM (non-extended) (use when signal units are mounted side of mast)	1	2	1	2	3	1	2	3
I1	N220676	PLATFORM (extended) (used when signal units are mounted front of mast)	1	2	1	2	3	1	2	3
J	N128592	STAY, LADDER						1	1	1
J1	N128591	STAY, LADDER	1		2	1		2	1	
K	N377598	CAP, PIPE	1	1	1	1	1	1	1	1
L	M062563	PIER, LADDER	1	1	1	1	1	1	1	1
M	J046816	BOLT, SQ. HD., 1/2" x 1-1/4" (cad. pl.)	2	2	2	2	2	2	2	2
N	J048013	NUT, HEX, 1/2" (cad. pl.)	2	2	2	2	2	2	2	2
*O	M254806	BOLT, FND., 1" x 24"	4	4	4	4	4			
*P	M122296	BOLT, FND., 1" x 36"						4	4	4
*Q	J048030	NUT, HEX, 1" (cad. pl.)	4	4	4	4	4	4	4	4
*R	K047509	WASHER, 1" stl. plate (cad. pl.)	4	4	4	4	4	4	4	4

*Foundation hardware is optional and is supplied only if specified on the order.

MAINLINE SIGNAL ASSEMBLIES
COLOR LIGHT & MARKER LIGHT SIGNAL UNITS

Mainline Color Light Signal Assemblies, utilizing MCL-100 Series Color Light Signal units, are available to suit most standard applications. All components and masts are pre-drilled enabling quick and easy erection. Time-honored US&S quality is your assurance of a reliable and efficient mainline signal assembly that will provide years of trouble-free operation.

For Mainline Colorlight Signal Assemblies utilizing US&S'S H-2 Searchlight Units, and MCL-101 Marker Light units, refer to catalog section RSE-2B1.

INTRODUCTION

The standard color light signals and marker lights shown in this catalog section have been arranged to provide maximum ease and flexibility in ordering. A basic signal is comprised of: (1) an aluminum or steel mast and ladder assembly; (2) signal units; and (3) installation material.

Because of the many possible combinations, the signal light units are listed in separate catalog sections for quick and easy reference and ordering. Included in these sections are optional items, hoods, backgrounds, and material required to mount and install the specific light unit. The mast and ladder required for a specific installation is covered in this catalog section.

MAST AND LADDER ASSEMBLY

Mast and ladder assemblies are available in both aluminum and steel combinations and sizes as described in the following paragraphs.

The aluminum masts with galvanized steel ladders are available in the 16'-5" height only. Steel mast with galvanized steel ladder combinations are available in heights of 16'-1¼", 22'-1¼" and 25'-1¼".

The 16'-1¼" and 16'-5" mast are designed for mounting one signal unit. The 22'-1¼" mast is designed for mounting two signal units, and the 25'-1¼" mast is designed for mounting three signal units.

Aluminum masts are fabricated from 6" aluminum pipe. Steel masts are fabricated from standard 5" steel pipe posts with the exception of the 25'-1¼" mast, which is a standard 5" pipe post in the upper section fitted into a 6" pipe post in the lower section. This arrangement provides added strength for the height.

The steel masts are pre-drilled to accommodate the maximum number of signal units for which the assembly is designed. When a lesser number of signal units is used, the drilled holes can be capped with a cover plate.

The aluminum or steel mast comes with a junction box base. Base mounting dimensions are shown in the illustration following.

The galvanized steel ladder assemblies consist of ladder sections, platforms, handrail, ladder stays, and if specified, foundation piers. The ladder assembly illustrated on page 6 shows three signal units with related platforms. If less than three signal units are to be supplied, a ladder stay is furnished in place of platform.

FEATURES

- Factory-fitted components make erection easy.
- Assemblies comply with AAR and state requirements.
- Many combinations available.
- Custom ordered to suit your particular requirements.

SIGNAL UNITS

The aluminum signal units used with the assemblies shown in this Catalog Section are US&S MCL-100 Color Light and the MCL-101 Marker light. The MCL-101 Marker Light may be used in place of any of the Color Light units for single indication units. Refer to applicable Catalog Section for detailed information on the signal light units.

MOUNTING HARDWARE AND INSTALLATION MATERIAL

Mounting hardware and installation material, e.g., mounting brackets, clamps, etc. apply to the specific signal light unit. Description and details of these items are contained in the Catalog Section for that unit. Refer to applicable Catalog Sections for detailed information on these items.

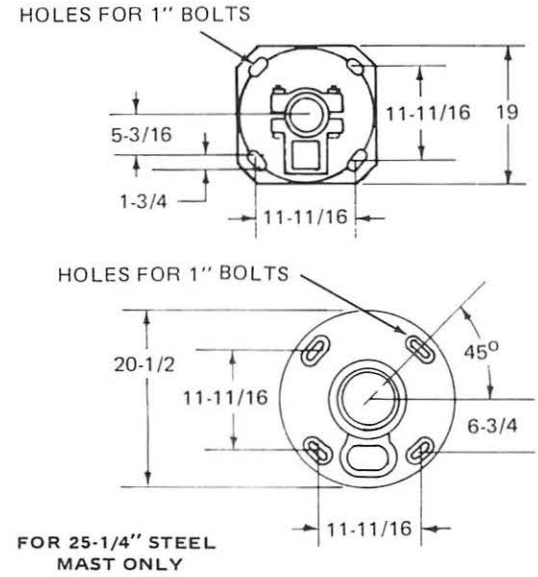

ALL DIMENSIONS ARE IN INCHES.

BASE MOUNTING DIMENSIONS

MAINLINE COLOR LIGHT SIGNAL ASSEMBLIES

ORDERING INFORMATION

The following pages illustrate the Color Light and Marker Light signal assemblies available form US&S. These assemblies are ordered by individually ordering the mast and ladder, and Color Light and/or Marker Light units with mounting hardware and installation material. Order as follows:

1. Determine number of signal light units required.
2. Refer to the illustrations following and select height of mast required. For example, if you require 3 signal light units, you must order the 25'-1¼" mast and ladder assembly.
   Aluminum masts and ladders are available in 16'-5" heights only; steel mast and ladders are available in 16'-1¼", 22'-1¼", and 25'-1¼" heights.
3. Order Mast and Ladder assembly from this catalog section. Quantities required for the assembly desired is shown in the tabulations following.
4. Order R-2 Color Light Signal Light Units from catalog section RSE-2D2. Optional equipment and installation material can also be found in this section.
5. Order HC-33 Marker Light Signal Unit from catalog section RSE-2D3. Optional equipment and installation material can also be found in this section.

NOTES: If the Signal Light Assembly desired cannot be obtained from the standard assemblies, consult your nearest US&S representative for additional information.

For Ordering Information on Mainline Color Light Signal Assemblies utilizing H-2 Searchlight Signal Units, refer to Catalog Section RSE-2B1.

ONE-UNIT ASSEMBLY

16'-5" ALUMINUM OR 16'-1-1/4" STEEL MAST AND LADDER ASSEMBLY

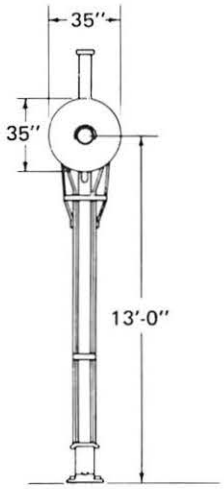

1-COLOR
SIGNAL UNIT

Aluminum

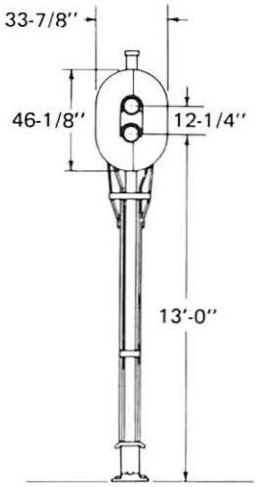

2-COLOR
SIGNAL UNIT

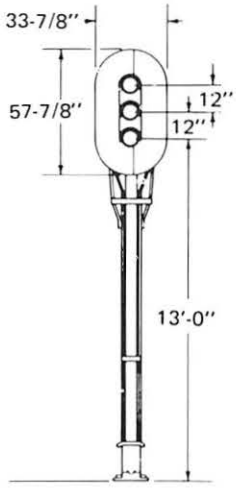

3-COLOR
SIGNAL UNIT

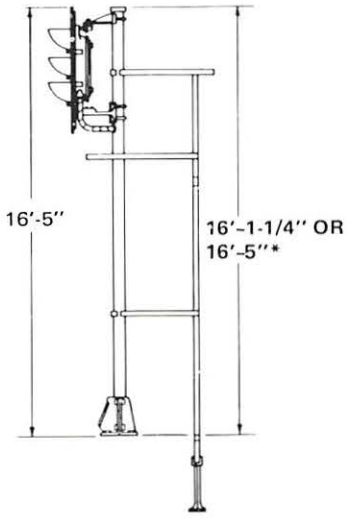

TWO-UNIT ASSEMBLY

22'-1¼" STEEL MAST AND LADDER ASSEMBLY

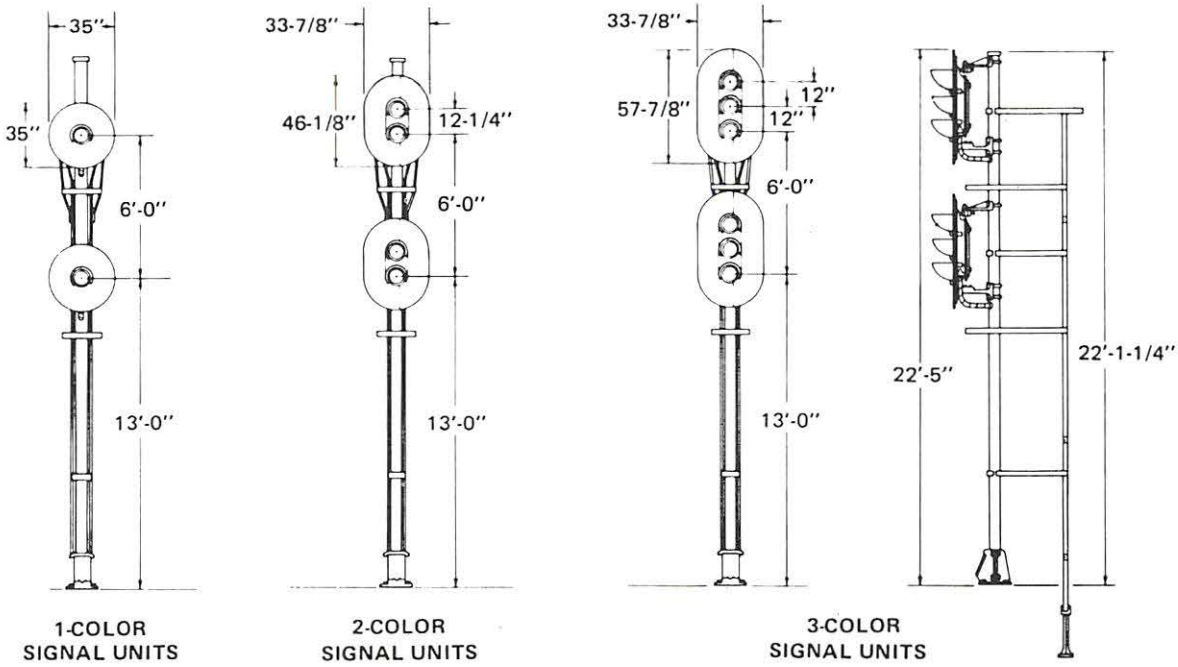

1-COLOR SIGNAL UNITS

2-COLOR SIGNAL UNITS

3-COLOR SIGNAL UNITS

THREE-UNIT ASSEMBLY

25'-1¼" STEEL MAST AND LADDER ASSEMBLY

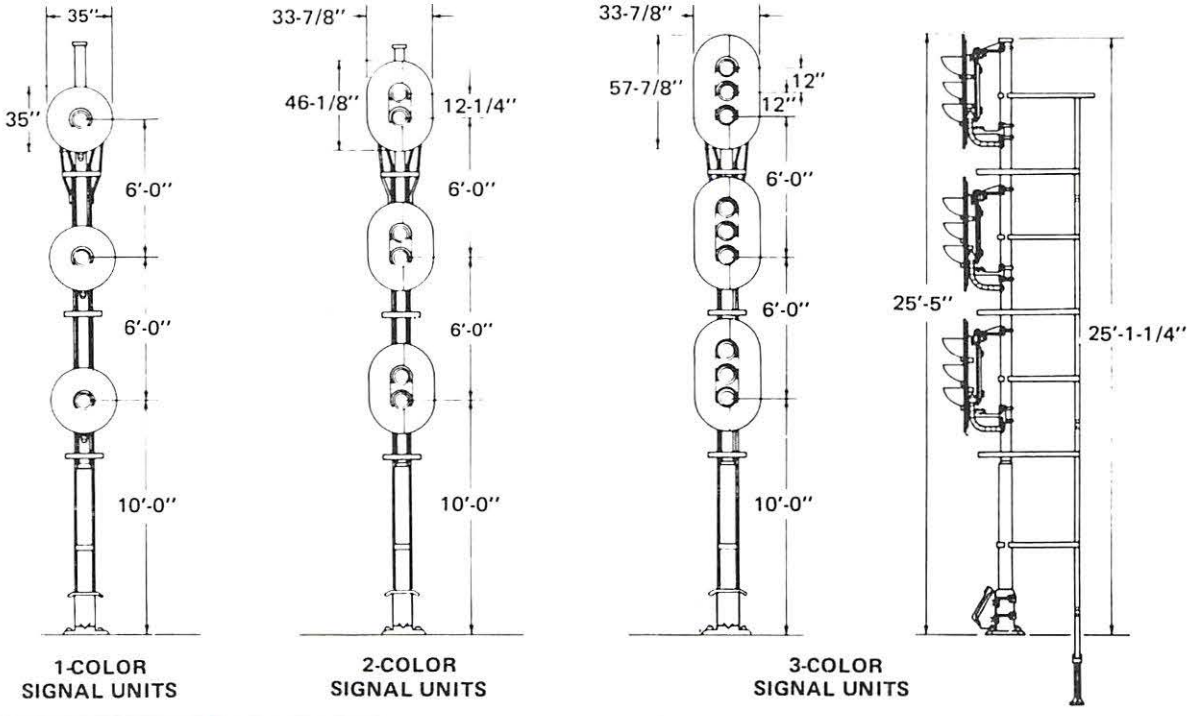

1-COLOR SIGNAL UNITS

2-COLOR SIGNAL UNITS

3-COLOR SIGNAL UNITS

TYPICAL 1-UNIT, 16'-5" SIGNAL ASSEMBLY

(ALUMINUM MAST AND LADDER)

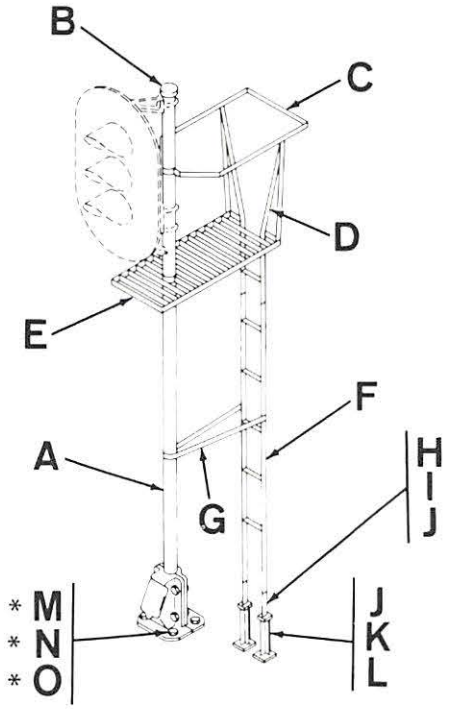

*OPTIONAL, SUPPLIED ONLY WHEN SPECIFIED.

REF.	PART NO.	DESCRIPTION	QTY.
A	N451394-1401	MAST, 6" ALUMINUM PIPE, with junction box clamp base, 24 terminal post	1
B	N437391-001	CAP, PIPE	1
C	N451438-0201	HANDRAIL, TOP	1
D	N377930-001	BRACE	2
E	N303733-001	PLATFORM	1
F	N377906-001	LADDER	1
G	N434461	STAY, LADDER	1
H	M390482-001	SIDE, BOTTOM SECTION	2
I	J046552	BOLT, SQ. HD., 1/2" X 1" (Cad. Pl.)	4
J	J480210-0105	NUT, HEX., 1/2" (galv.)	6
K	M62563	PIER, LADDER	1
L	J466076-0120	BOLT, SQ. HD., 1/2" X 1-1/4" (galv.)	2
*M	M254806	BOLT, FOUNDATION, 1" X 24" (galv.)	4
*N	J480210-0159	NUT, HEX., 1" (galv.)	4
*O	J475132-0121	WASHER, 1", steel plate (galv.)	4

*Foundation hardware is optional and is supplied only if specified on the order.

TYPICAL 3-UNIT 25'-1¼" SIGNAL ASSEMBLY

(STEEL MAST AND LADDER)

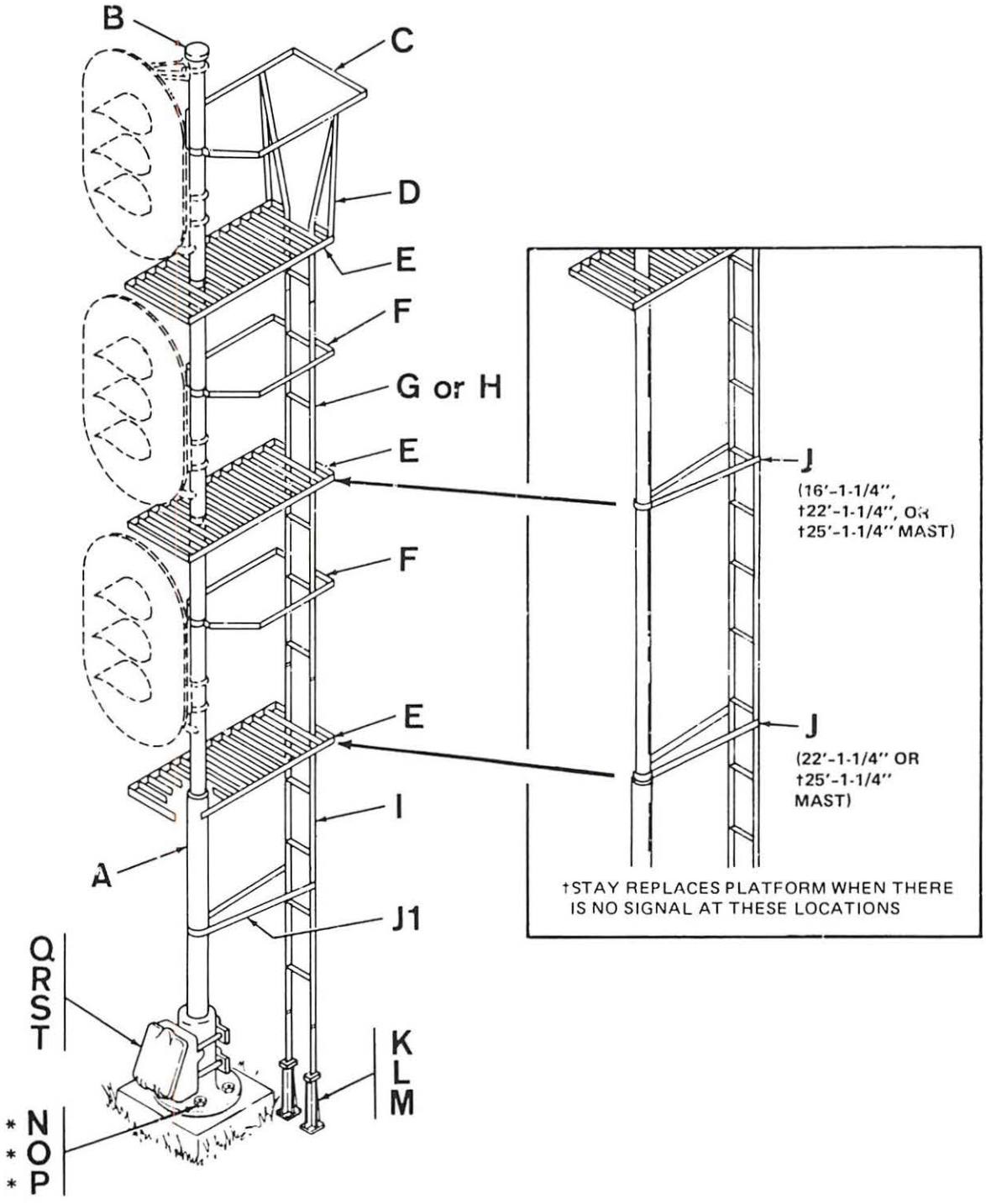

*OPTIONAL, SUPPLIED ONLY WHEN SPECIFIED.

STEEL MASTS AND LADDERS

REF.	PART NO.	DESCRIPTION	16'-1¼" ASSY	22'-1¼" ASSY	25'-1¼" ASSY
A1	N390497	MAST, 5" STEEL PIPE, with holes for 1 signal, with junction box clamp base, 24 terminal posts	1		
A2	N390502	MAST, 5" STEEL PIPE, with holes for 2 signals, with junction box clamp base, 24 terminal posts		1	
A3	N390549	MAST, 5" & 6" STEEL PIPE, with holes for 3 signals, with base arranged for junction box			1
B	N377598	CAP, PIPE	1	1	1
C	N390566	HANDRAIL, TOP	1	1	1
D	N390576	BRACE	2	2	2
E	N220676	PLATFORM	1	2	3
F	N128467	HANDRAIL, MIDDLE OR BOTTOM		1	2
G	N377906	LADDER, TOP SECTION		1	1
H	M390483	LADDER	1		
I	N390484	LADDER, BOTTOM SECTION		1	
I1	N390485	LADDER, BOTTOM SECTION			1
J	N128591	STAY, LADDER	1	1	
J1	N128592	STAY, LADDER			1
K	M062563	PIER, LADDER	1	1	1
L	J046816	BOLT, SQ. HD. 1/2" x 1-1/4" (cad. pl.)	2	2	2
M	J048013	NUT, HEX, 1/2" (cad. pl.)	2	2	2
*N	M254806	BOLT, FOUNDATION, 1" x 24"	4	4	
*N1	M169805	BOLT, FOUNDATION, 1" x 36"			4
*O	J048030	NUT, HEX, 1" (ZN pl)	4	4	4
*P	J047509	WASHER, 1" steel plate (ZN pl)	4	4	4
Q	N212958	BOX, JUNCTION, 24 term. posts (for use with A3)			1
R	N104294	CLAMP, HALF (for junction box)			2
S	N104873	BOLT, HOOK, 3/4" (for junction box)			4
T	J048026	NUT, HEX, 3/4" (cad. pl.) (for hook bolt)			4

NOTE: On installations where either middle or bottom signal unit (or both) is to be omitted, furnish cover cap N385275 (along with the same U-bolt and nuts used for cable outlet) to cover unused opening in mast.

On installations where either middle or bottom signal unit (or both) is omitted, if ladder platform is not desired at the location of the omitted signal or signals, then omit platform and handrail for that location and furnish instead a ladder stay N128591 (REF. J) to be installed at location of omitted platform.

* Foundation hardware is optional and is supplied only if specified on the order.

H-2 SEARCHLIGHT DWARF SIGNALS

For applications where a searchlight dwarf signal is required, US&S offers the H-2 Searchlight Unit fitted with a base suitable for mounting on a flat surface, such as a concrete foundation.

DESCRIPTION

This signal unit is basically the same as that used on high signals, but is provided with a prism cover glass designed to spread the beam upward. A 10° flat inclined deflecting glass is standard for this purpose. Dwarf signals are equipped with the standard 8-3/8" diameter lens.

Searchlight Dwarf Signals are available in single unit or two unit configurations, with or without phankill. The single unit configuration consists of a standard H-2 Searchlight Signal with a special mounting base that permits the unit to be mounted on any flat surface. The two unit configuration uses two searchlight units, one mounted on top of the other. This type of assembly uses special cases and mounting brackets designed for this purpose.

For detailed information on the H-2 Searchlight Signal Unit, refer to RSE-2D1.

H-2 SEARCHLIGHT DWARF SIGNAL

The following tabulation provides ordering informtion for the case configurations used for dwarf signals. The ordering number for the case required ***does not include the operating unit.*** To order a complete assembly:

1. Order single or two unit dwarf searchlight case, with or without phankill from the ordering information.
2. Order ***operating unit*** separately. (Refer to RSE-2D1)
3. Order optional items separately.

H-2 DWARF SIGNAL, 1-UNIT

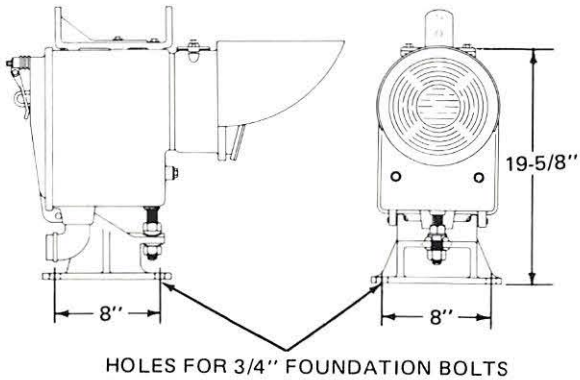

HOLES FOR 3/4" FOUNDATION BOLTS
(BOLT NOT FURNISHED)

PART NO. \ INCLUDES	CLOSE-UP PRISM	1-1/2"-90° STREET ELL	JAKE CONNECTOR	HOOD, STD.	HOOD, LONG	SIGHTING BRACKET	PHANKILL UNIT	SPEC. MTG. BRKT.	2"-90° STREET ELL
N451353-0809	X	X	X	X					
N451353-0806	X		X		X	X	X	X	X

DOES NOT INCLUDE OPERATING UNIT

H-2 DWARF SIGNAL, 2 UNITS

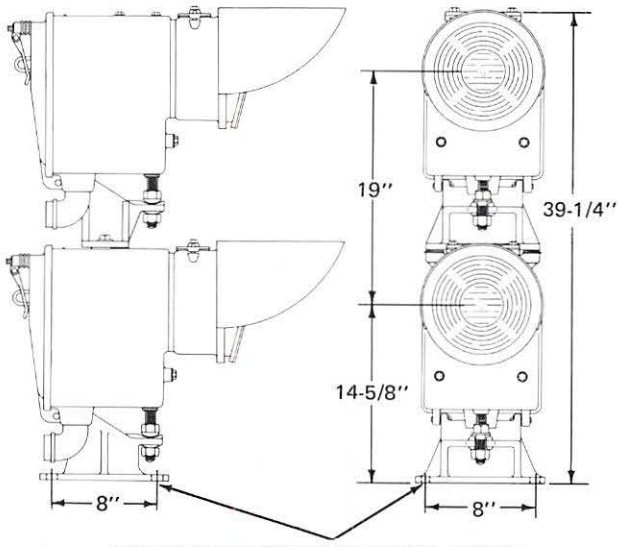

Each unit includes the following:
- Close-up prism
- 1½" 90° street ell
- Jake Connector
- Standard Hood

Operating Units are not included.

PART NO. N451353-1101
PART NO. N451353-1111 (Inc. phankill unit)

OPTIONAL EQUIPMENT

FOR 1-UNIT H-2 DWARF SIGNAL

PART NO.	DESCRIPTION
M-173396	BACKGROUND, 24"
M-244246	BACKGROUND, 20"
M-144459	BACKGROUND, 35"
J500099-0112	SCREW, 3/8" x 3/4" long, hex hd. (1 Req'd.) — attaching hardware for Backgrounds
J475132-0114	WASHER, 3/8" Plain, galv. (2 Req'd.) — attaching hardware for Backgrounds
J475138-0113	WASHER, 3/8" Lock, galv. (3 Req'd.) — attaching hardware for Backgrounds

OPTIONAL EQUIPMENT

FOR 1-UNIT or 2-UNIT H-2 DWARF SIGNAL

PART NO.	DESCRIPTION
A069059	CONDUIT, 1-1/2" Flex (specify length)
A069060	CONDUIT, 2" Flex (specify length)

N-2 COLOR LIGHT DWARF SIGNALS

The N-2 Color Light Dwarf Signal is designed primarily for use in classification yards, but may be adapted for use anywhere a dwarf signal is required. This dwarf signal is a completely weather-proof, ruggedly built aluminum signal unit that will provide many years of efficient, trouble-free service. Two-color and three-color configurations are available.

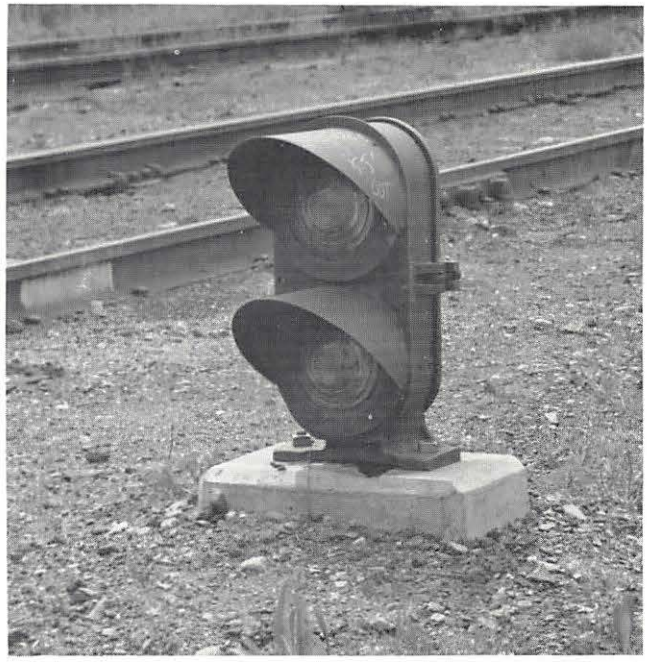

DESCRIPTION

The N-2 Dwarf Signal Unit consists of a case in which is housed accurately located lamp units with a precision optical system. The signal units are designed for dc operation.

Case

The case, consisting of an aluminum housing with cover, is ruggedly designed for hard use and maximum service life. It is weather tight, with the door hinged for easy access to the case interior and lamp. A hasp, for securing the door in a closed position, is arranged so that the door may be padlocked. Screened ventilators are built into the door to provide air circulation and to prevent condensation. For cable entrance, a 1-1/2" x 1-1/4" reducing Street Ell is installed in an opening provided in the side of the case. The case is manufactured to accommodate two or three doublet lenses with lamp receptacle assemblies.

Optical Assembly

The optical assembly consists of a lamp unit and doublet lens. (This assembly is easily removed as a unit from the front of the case.) The lamp unit, with attached terminals, is mounted on a bracket and affixed to the lens housing. The lamp receptacle is accurately located so that the lamp filament is at the focal center of the lens system. The lamps used are single contact, special bayonet base type. Refer to Catalog Section RSE-17B1 for lamp ordering information.

The doublet lens consists of a colored back lens and clear front lens. The colored back lens is 5-1/2" in diameter and the clear front lens is 6-3/8" in diameter. This lens doublet is a combination of two special stepped lenses which give a considerable angle of diversion to the light beam. The standard signal units are supplied with prisms that deflect up.

MOUNTING ARRANGEMENT

The signal units are designed for mounting directly to a concrete foundation. Refer to the diagram on the next page for foundation requirements, mounting dimensions, and specifications.

FEATURES

- All aluminum housing.
- Ruggedly constructed to provide years of service.
- Uitlizes a precision optical assembly.
- Complies with AAR and state requirements.
- Easily Maintained — quick access to case interior for maintenance or changing lamp.

N-2 COLOR LIGHT DWARF SIGNALS

ORDERING INFORMATION

The tabulations that follow contain part numbers and details of the standard 3-color and 2-color N-2 Dwarf Signals. For special signal units, consult your nearest US&S Representative.

2-COLOR ASPECT

Single Contact, bayonet lamp base, dc operation
With upward deflecting unit

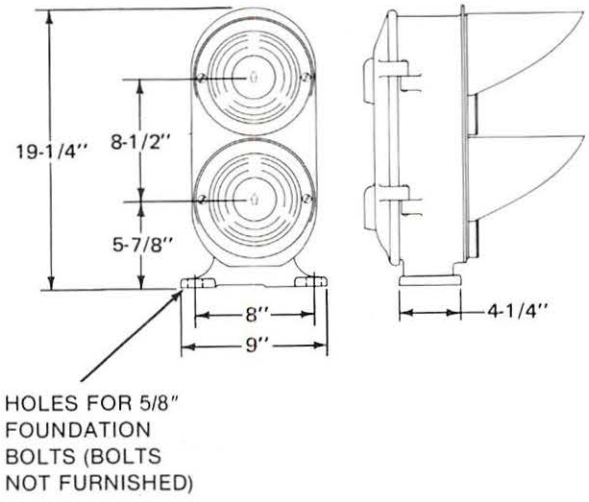

PART NO.	LENS COLOR
N120721	Yellow/Red
N126110	Red/Yellow

3-COLOR ASPECT

Single Contact, bayonet base, dc operation
With upward deflecting unit

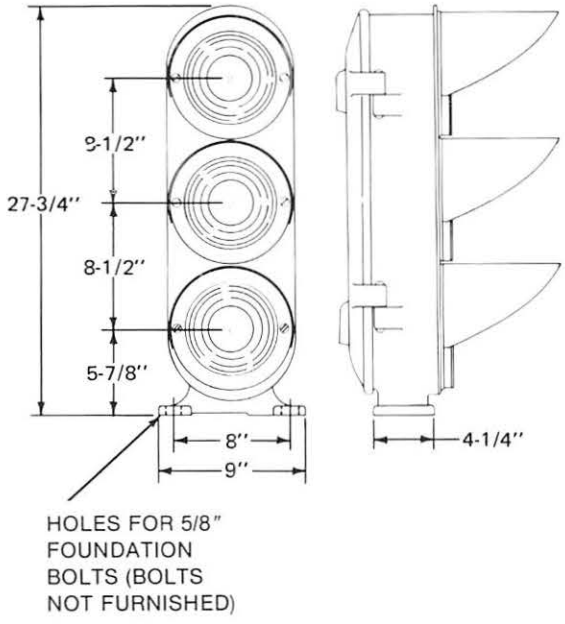

PART NO.	LENS COLOR
N120747	Gr./Yel./Red
N127982	Red/Yel./Gr.

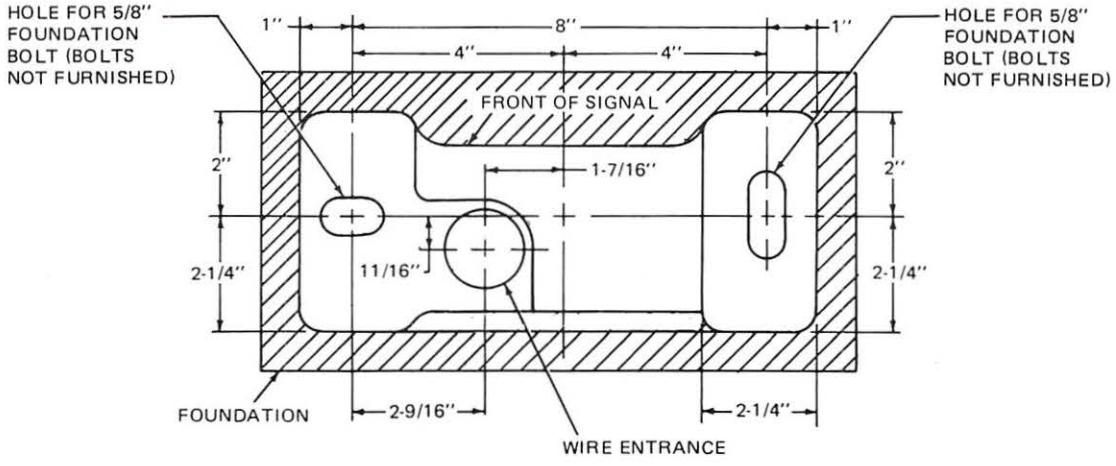

FOUNDATION REQUIREMENTS

NOTE: For detail parts and additional information, refer to service manual SM5430.

ES-20 COLOR LIGHT ELECTRIC SWITCH SIGNALS

The WABCO ES-20 versatile color light electric switch signal is commonly used for indicating position of power operated switches at classification and car storage yards. Usage, however, is not restricted to these applications as their design permits their use as a light repeater of switch position wherever electric energy is available for lighting purposes.

This rugged signal assembly, constructed of aluminum, will provide many years of maintenance free service.

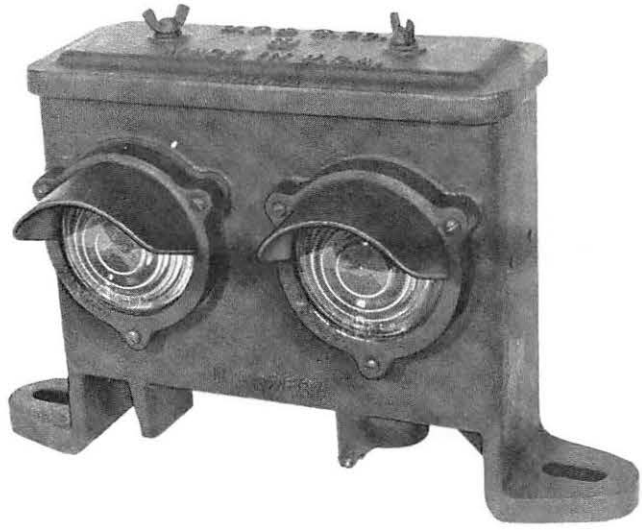

FEATURES

- One lamp used for each front and back indication.
- Built-in protection against phantom indications.
- Can be used as switch position indicator or light repeater.
- Complies with AAR and state requirements.
- Lamp and wiring easily accessible.
- Long service life, minimal maintenance required.

PRINTED IN U.S.A.

UNION SWITCH & SIGNAL DIVISION
AMERICAN STANDARD INC. / SWISSVALE, PA 15218

RSE-2C3
3/77

MCL-100 MODULAR COLOR LIGHTS

The MCL-100 Modular Color Lights are designed to provide a variety of mainline color light signals for standard applications. Our "modular design approach" allows the same basic light module to be configured in single, double, or three-unit vertical, or three-unit triangular arrangements. Special configurations (4 units, etc.) can be provided on request.

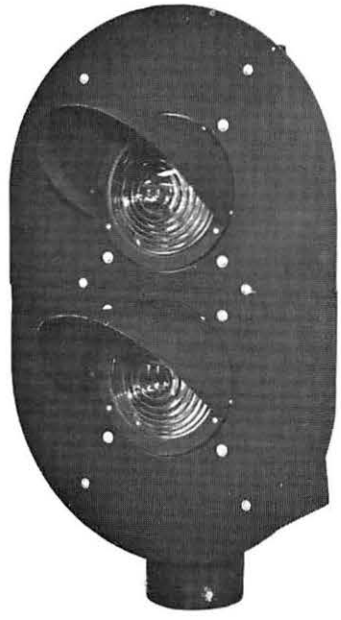

Each MCL-100 Modular Color Light Unit consists of cylindrical, weatherproof light modules mounted on a rigid aluminum frame. The light module houses our R-2/P-5 assembly and has two 2-terminal blocks as standard equipment but can accept up to four 2-terminal blocks per customer's requirements. Provisions are also made for mounting an adjustable resistor or a multi-tap 60 VA transformer when required. The assembly contains a junction box which allows for separate cabling to each light module. Each light module can be individually removed and replaced.

LIGHT MODULE

The lightweight die-cast aluminum housing has a sturdy hinged door for easy interior access. A hasp that can be padlocked prevents tampering. A back door provides access to the lamp, lamp wiring and housing interior for easy maintenance. The back lens is secured to the module housing interior by removeable clips. The front lens is secured to the outside of the housing by a lens ring. This facilitates easy replacement of either lens, should it be required.

FRAMES / BACKGROUNDS

Signal frames and backgrounds are made from 1/8" aluminum for long life and weight reduction. Backgrounds bolt directly to the frame and are easily replaced by removing the mounting bolts.

FEATURES

- Light weight die-cast aluminum modules facilitate easy installation and replacement.
- Installation can be accomplished by one person.
- Modules are individually replaceable.
- Light modules can be individually aligned with built-in sights. Replaced modules do not require re-alignment.
- Modules have lockable, hinged doors.
- Up to four 2-terminal blocks can be provided on each module, with room for adjustable resistor or 60VA transformer.
- Junction box provides for separate cabling to each module.
- Top-of-mast & side-of-mast signals are identical.
- Lenses, hoods, phankills, inclined cover glass, and bulbs are interchangeable with US&S's R-2 and P-5 signals.
- 8-3/8" diameter outer lens.

OPTICAL ASSEMBLY

The optical assembly consists of a lamp unit and doublet lens. The lamp unit, with attached terminals, is mounted on a bracket and affixed to the module. The lamp receptacle is accurately located so that the lamp filament is at the focal point of the lens system. The standard lamp type is S-11 with single contact candelabra bayonet base. Lamps can be replaced without making any readjustment or causing any change in the optical efficiency.

The standard lenses consist of a colored back lens and clear front lens. The colored back lens is 5-1/2″ in diameter and the clear front lens is 8-3/8″ in diameter.

INSTALLATION

The MCL-100 color light is designed for top-of-mast mounting on 5'' mast without any additional hardware required or with optional mounting bracket for side-of-mast mounting. Because of the modular design, field installation can be accomplished by one person without using a crane. Signal unit components, each weighing less than 20 pounds, can be assembled separately on top of the mast.

OPTIONS

Options available are a side-of-mast mounting bracket and alignment telescope.

Mounting Bracket

If side of mast mounting is required, order the mounting bracket from the back page. The bracket is secured to the mast by U-bolts, and supports the signal unit. The side-of-mast mounting bracket is designed to run the cable throught the bracket directly to the assembly. All wiring is internal.

Alignment Telescope

An optional alignment telescope is available from US&S. This device assures accurate alignment of the unit in the field. Alignment can be accomplished by one person.

MISCELLANEOUS PARTS AND EQUIPMENT

PART NO.	DESCRIPTION
N451620-0101	LIGHT MODULE, Red Aspect
N451620-0102	LIGHT MODULE, Green Aspect
N451620-0103	LIGHT MODULE, Yellow Aspect
J130694	DEFLECTING UNIT
M451621-0801	BACKGROUND, 35'' dia. for MCL-101
M451621-0802	BACKGROUND, 24'' dia. for MCL-101
M451621-0301	BACKGROUND, for MCL-102 and MCL-103 (2 required for each)
M451621-0302	BACKGROUND, CENTER SECTION, FOR MCL-103 (1 required)
M451621-0201	BACKGROUND, 36'' dia. for MCL-103T
J053131	INNER LENS, RED (Glass)
J053133	INNER LENS, GREEN (Glass)
J053124	INNER LENS, YELLOW (Glass)
J053127	OUTER LENS, CLEAR (Glass)
M065898	LENS HOOD, 10''

NOTE: For complete detail parts list and additional information, refer to service manual SM6232

MCL-100 MODULAR COLOR LIGHTS

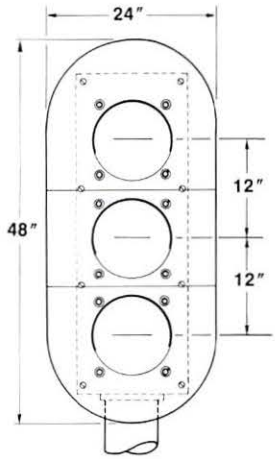

PART NO.	DESCRIPTION
X451620-0901	MCL-103 COLOR LIGHT Top,Green; Mid. Yellow; Bottom, Red

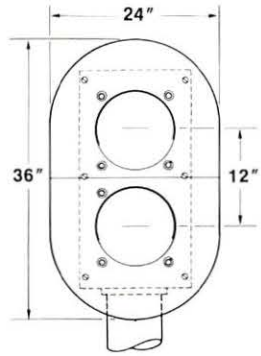

PART NO.	DESCRIPTION
X451620-0701	MCL-102 COLOR LIGHT Top, Green; Bottom, Red

PART NO.	DESCRIPTION
X451620-0801	MCL-101 COLOR LIGHT Green Aspect

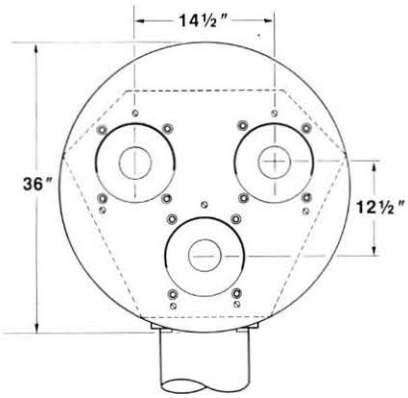

PART NO.	DESCRIPTION
X451620-0601	MCL-103T COLOR LIGHT Left, Yellow; Right, Green; Bottom, Red

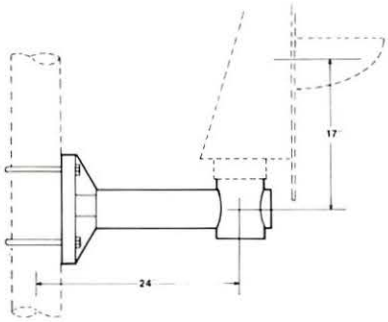

PART NO.	DESCRIPTION
X451621-0104	MOUNTING BRACKET, For side-of-mast mounting complete with hardware.

UNION SWITCH & SIGNAL DIVISION
AMERICAN STANDARD INC. / SWISSVALE, PA 15218

MCL-100 MODULAR COLOR LIGHTS

The MCL-100 Modular Color Lights are designed to provide a variety of mainline color light signals for standard applications. Our "modular design approach" allows the same basic light module to be configured in single, double, or three-unit vertical, or three-unit triangular arrangements. Special configurations (4 units, etc.) can be provided on request.

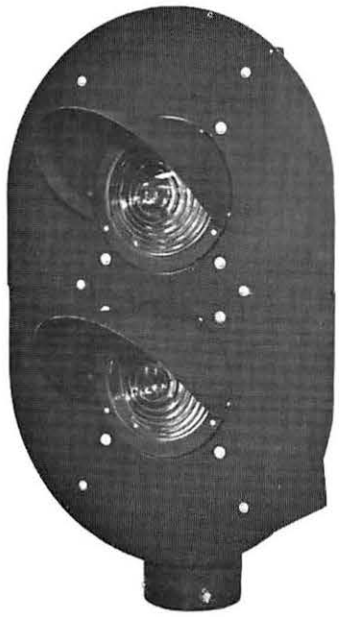

Each MCL-100 Modular Color Light Unit consists of cylindrical, weatherproof light modules mounted on a rigid aluminum frame. The light module houses our R-2/P-5 assembly and has two 2-terminal blocks as standard equipment but can accept up to four 2-terminal blocks per customer's requirements. Provisions are also made for mounting an adjustable resistor or a multi-tap 60 VA transformer when required. The assembly contains a junction box which allows for separate cabling to each light module. Each light module can be individually removed and replaced.

LIGHT MODULE

The lightweight die-cast aluminum housing has a sturdy hinged door for easy interior access. A hasp that can be padlocked prevents tampering. A back door provides access to the lamp, lamp wiring and housing interior for easy maintenance. The back lens is secured to the module housing interior by removeable clips. The front lens is secured to the outside of the housing by a lens ring. This facilitates easy replacement of either lens, should it be required.

FRAMES / BACKGROUNDS

Signal frames and backgrounds are made from 1/8" aluminum for long life and weight reduction. Backgrounds bolt directly to the frame and are easily replaced by removing the mounting bolts.

FEATURES

- Light weight die-cast aluminum modules facilitate easy installation and replacement.
- Installation can be accomplished by one person.
- Modules are individually replaceable.
- Light modules can be individually aligned with built-in sights. Replaced modules do not require re-alignment.
- Modules have lockable, hinged doors.
- Up to four 2-terminal blocks can be provided on each module, with room for adjustable resistor or 60VA transformer.
- Junction box provides for separate cabling to each module.
- Top-of-mast & side-of-mast signals are identical.
- Lenses, hoods, phankills, inclined cover glass, and bulbs are interchangeable with US&S's R-2 and P-5 signals.
- 8-3/8" diameter outer lens.

OPTICAL ASSEMBLY

The optical assembly consists of a lamp unit and doublet lens. The lamp unit, with attached terminals, is mounted on a bracket and affixed to the module. The lamp receptacle is accurately located so that the lamp filament is at the focal point of the lens system. The standard lamp type is S-11 with single contact candelabra bayonet base. Lamps can be replaced without making any readjustment or causing any change in the optical efficiency.

The standard lenses consist of a colored back lens and clear front lens. The colored back lens is 5-1/2″ in diameter and the clear front lens is 8-3/8″ in diameter.

INSTALLATION

The MCL-100 color light is designed for top-of-mast mounting on 5" mast without any additional hardware required or with optional mounting bracket for side-of-mast mounting. Because of the modular design, field installation can be accomplished by one person without using a crane. Signal unit components, each weighing less than 20 pounds, can be assembled separately on top of the mast.

OPTIONS

Options available are a side-of-mast mounting bracket and alignment telescope.

Mounting Bracket

If side of mast mounting is required, order the mounting bracket from the back page. The bracket is secured to the mast by U-bolts, and supports the signal unit. The side-of-mast mounting bracket is designed to run the cable throught the bracket directly to the assembly. All wiring is internal.

Alignment Telescope

An optional alignment telescope is available from US&S. This device assures accurate alignment of the unit in the field. Alignment can be accomplished by one person.

MISCELLANEOUS PARTS AND EQUIPMENT

PART NO.	DESCRIPTION
N451620-0101	LIGHT MODULE, Red Aspect
N451620-0102	LIGHT MODULE, Green Aspect
N451620-0103	LIGHT MODULE, Yellow Aspect
J130694	DEFLECTING UNIT
M451621-0801	BACKGROUND, 35" dia. for MCL-101
M451621-0802	BACKGROUND, 24" dia. for MCL-101
M451621-0301	BACKGROUND, for MCL-102 and MCL-103 (2 required for each)
M451621-0302	BACKGROUND, CENTER SECTION, FOR MCL-103 (1 required)
M451621-0201	BACKGROUND, 36" dia. for MCL-103T
J053131	INNER LENS, RED (Glass)
J053133	INNER LENS, GREEN (Glass)
J053124	INNER LENS, YELLOW (Glass)
J053127	OUTER LENS, CLEAR (Glass)
M065898	LENS HOOD, 10"

NOTE: For complete detail parts list and additional information, refer to service manual SM6232

MCL-100 MODULAR COLOR LIGHTS

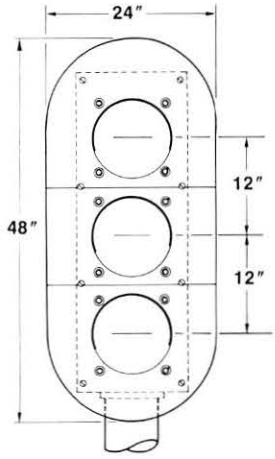

PART NO.	DESCRIPTION
X451620-0901	MCL-103 COLOR LIGHT Top,Green; Mid. Yellow; Bottom, Red

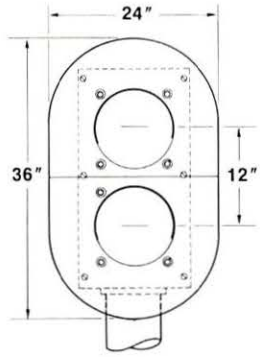

PART NO.	DESCRIPTION
X451620-0701	MCL-102 COLOR LIGHT Top, Green; Bottom, Red

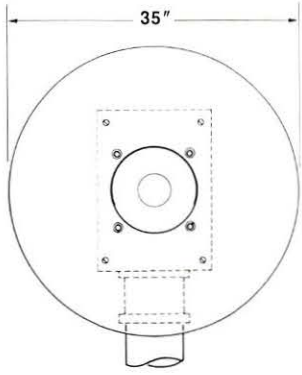

PART NO.	DESCRIPTION
X451620-0801	MCL-101 COLOR LIGHT Green Aspect

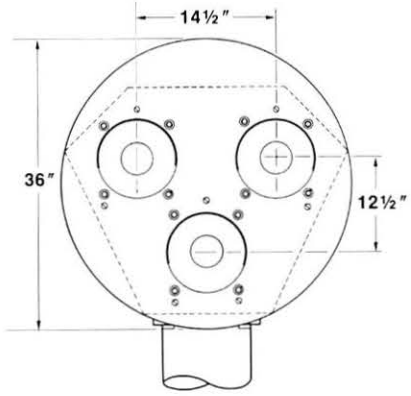

PART NO.	DESCRIPTION
X451620-0601	MCL-103T COLOR LIGHT Left, Yellow; Right, Green; Bottom, Red

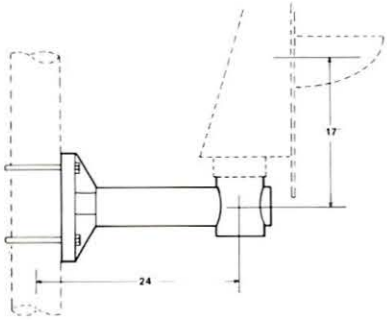

PART NO.	DESCRIPTION
X451621-0104	MOUNTING BRACKET, For side-of-mast mounting complete with hardware.

UNION SWITCH & SIGNAL DIVISION
AMERICAN STANDARD INC. / SWISSVALE, PA 15218

MCL-101 MARKER LIGHT SIGNAL UNIT

The MCL-101 Marker Light Signal Unit has been designed for fulfilling 1-color aspect requirements. It is a reliable unit used with color light signal units, to provide many signaling combinations. These standard units are available in a wide choice of color indications, with or without close-up prisms.

DESCRIPTION

The MCL-101 Marker Light consists of an optical assembly housed in a lightweight, weatherproof aluminum case with mounting collar and a 1/8" aluminum background. The modular construction facilitates field installation and provides for easy component replacement.

LIGHT MODULE

The lightweight die-cast aluminum housing has a sturdy hinged door for easy interior access to the lamp, lamp wiring and housing interior. A lockable hasp secures the rear door to the case. The back lens is fastened to the module housing interior by removeable clips. The front lens is secured to the outside of the housing by a lens ring. This facilitates easy replacement of either lens, should it be required.

FRAMES / BACKGROUNDS

Signal frames and backgrounds are made from 1/8" aluminum for long life and weight reduction. Backgrounds bolt directly to the frame and are easily replaced by removing the mounting bolts.

OPTICAL ASSEMBLY

The optical assembly consists of a lamp unit and doublet lens. The lamp unit, with attached terminals, is mounted on a bracket and affixed to the module. The lamp receptacle is accurately located so that the lamp filament is at the focal point of the lens system. The standard lamp type is S-11 with single contact candelabra bayonet base. Lamps can be replaced without making any readjustment or causing any change in the optical efficiency.

The standard lenses consist of a colored back lens and clear front lens. The colored back lens is 5-1/2" in diameter and the clear front lens is 8-3/8" in diameter.

FEATURES

- Light weight die-cast aluminum module facilitates easy installation and replacement.
- Installation can be accomplished by one person.
- Light module can be aligned with built-in sights. Replaced modules do not require realignment.
- Module has lockable, hinged door.
- Up to four 2-terminal blocks can be provided on module, with room for adjustable resistor or 60VA transformer.
- Junction box provides for cabling to module.
- Top-of-mast & side-of-mast signals are identical.
- Lenses, hoods, phankills, inclined cover glass, and bulbs are interchangeable with US&S's R-2 and P-5 signals.
- Standard 8-3/8" diameter outer lens.

INSTALLATION

The MCL-101 color light is designed for top-of-mast mounting on 5" mast without any additional hardware required or with optional mounting bracket for side-of-mast mounting. Because of the modular design, field installation can be accomplished by one person without using a crane. Signal unit components, each weighing less than 20 pounds, can be assembled separately on top of the mast.

Mounting Bracket

If side of mast mounting is required, order the mounting bracket separately. The bracket is secured to the mast by U-bolts, and supports the signal unit. The side-of-mast mounting bracket is designed to run the cable throught the bracket directly to the assembly. All wiring is internal.

Alignment Telescope

An optional alignment telescope is available from US&S. This device assures accurate alignment of the unit in the field. Alignment can be accomplished by one person.

MCL-101 MARKER LIGHT SIGNAL UNIT

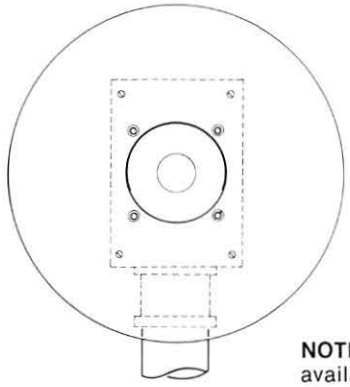

NOTE: The MCL-101 Marker Light is also available with red or yellow aspect. When ordering, please specify color desired.

PART NO.	DESCRIPTION
X451620-0802	MCL-101 MARKER LIGHT with 35" background, green aspect.

MISCELLANEOUS PARTS AND EQUIPMENT

PART NO.	DESCRIPTION
N451620-0101	LIGHT MODULE, Red Aspect
N451620-0102	LIGHT MODULE, Green Aspect
N451620-0103	LIGHT MODULE, Yellow Aspect
M451621-0801	BACKGROUND, 35" dia.
M451621-0802	BACKGROUND, 24" dia.
J053131	INNER LENS, RED (Glass)
J053133	INNER LENS, GREEN (Glass)
J053124	INNER LENS, YELLOW (Glass)
J053127	OUTER LENS, CLEAR (Glass)
M065898	LENS HOOD, 10"
X451621-0104	MOUNTING BRACKET, for side of mast mounting, with hardware.

NOTE: For complete detail parts list and additional information, refer to service manual SM6232

INCLINED COVER GLASS ASSEMBLY AND PHANKILL UNITS

The Inclined Cover Glass Assembly is an optional device for use in controlling beam patterns of color light, searchlight, and marker light signals.

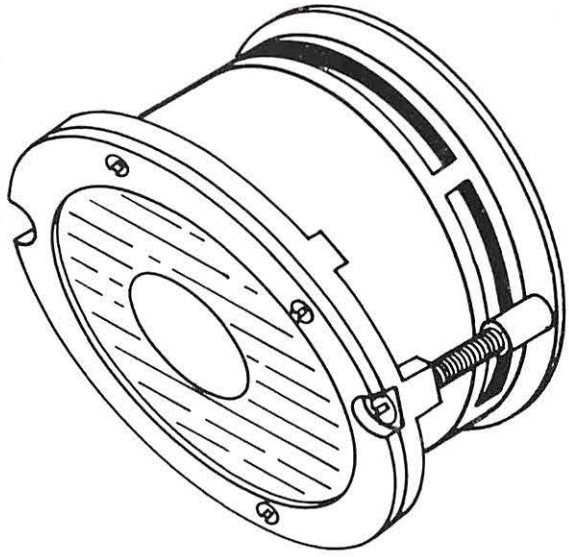

SHOWN WITH PHANKILL

A clear glass roundel provides the desired deflections and, therefore, permits application of a single assembly to signal units with a lens of any color. The basic inclined glass assembly reduces phantom effects, but a phankill unit may be incorporated for the reduction or more severe phantom effects.

DESCRIPTION

The Inclined Cover Glass Assmbly is designed for mounting on signal units containing 8-3/8" diameter lens units. It is used with MCL-100 Color Light Signals, H-2 Searchlight Signals, and MCL-101 Marker Lights.

CONSTRUCTION

The basic cover glass assembly consists of an adapter ring, clear glass roundel, and lens ring. The roundel is held in position in the adapter ring by the lens ring and three screws. A gasket between the lens ring and adapter ring provides a seal to prevent entry of water into the unit. A hole is provided in each side of the adapter ring for mounting the complete assembly to the signal unit. A gasket cemented to the rear of the adapter ring provides a water-tight seal between the inclined cover glass assembly and signal unit.

ROUNDELS

The roundels used in the Inclined Cover Glass assembly provide different deflection and diffusion patterns to accommodate the various track curvature and geographic conditions encountered. A complete assortment of roundels with different patterns are available as a separate item. Refer to Ordering Information for details.

PHANKILL UNITS

Phankill units are available for use with the inclined cover glass assembly. The phankill unit is attached with a lens ring and three mounting screws, which must be ordered separately. Refer to Ordering Information for details.

ORDERING INFORMATION

The inclined cover glass can be ordered with or without phankill. The complete assembly consists of the roundel and adapter (inclined) ring, phankill unit, when called for, lens ring (for existing installations) and mounting screws. To order, proceed as follows:

1. Select Inclined Cover Glass Assembly from Table 1. Specify if inclined cover glass is to be used with dwarf searchlight signal unit.
2. Select other items (Ref. B, C, & D in Figure 1) to complete the installation from Table 2. These items to be ordered in addition to the inclined Cover Glass.
3. Order all items by part number and description, being sure to supply separate part numbers for the phankill (when required), lens ring, and mounting screws.

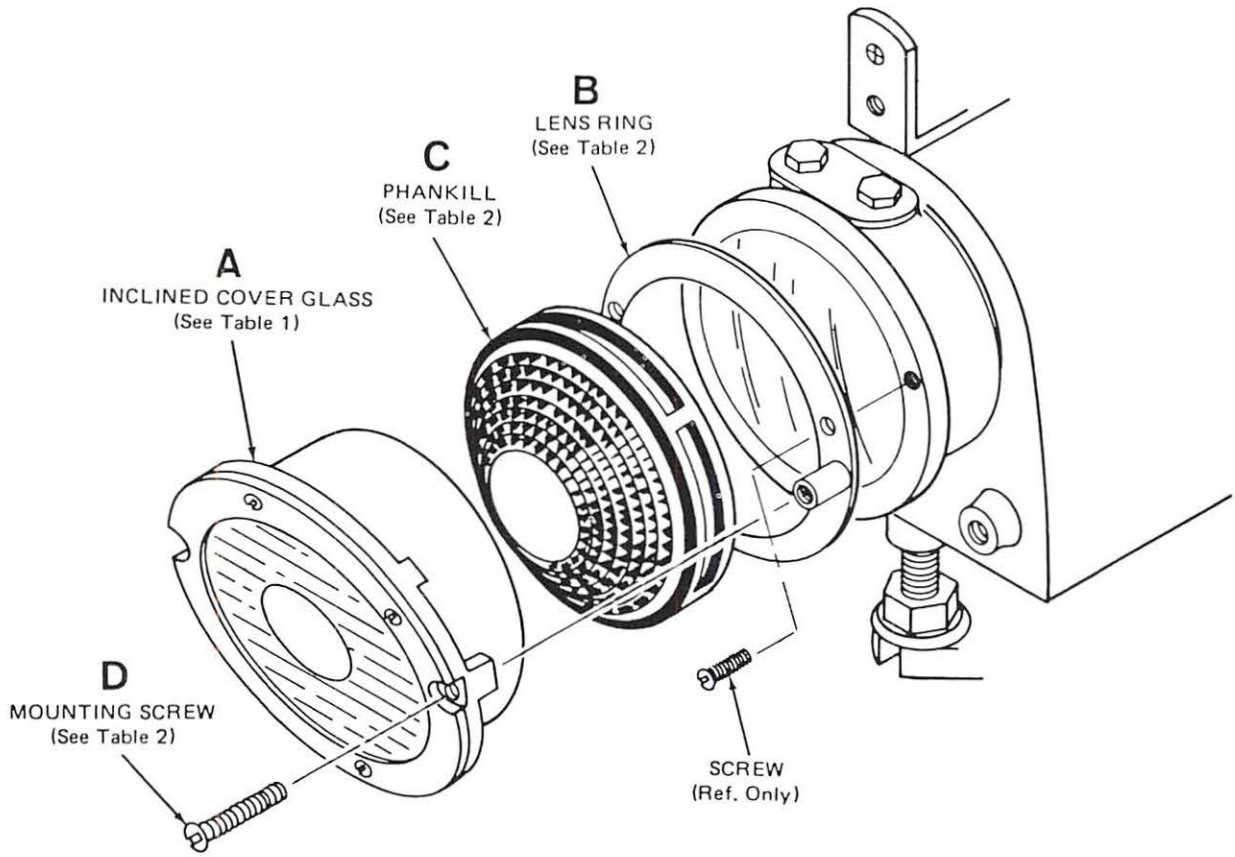

TABLE 1

INCLINED COVER GLASS COMPLETE WITH CLEAR ROUNDEL FOR H-2 SEARCHLIGHT SIGNALS, MCL-100 COLOR LIGHTS and MCL-101 MARKER LIGHTS

REF.	PART NO.	DESCRIPTION
A	N184403	With flat, clear roundel for 10° deflection to left.
A1	N184404	Same as above, with 20° deflection to left.
A2	N184405	Same as above, with 30° spreadlight (15° left, 15°right.).
A3	N220829	With flat, plain, clear roundel.
A4	N228584	With convex, clear roundel for 16° spreadlight (8°left, 8°right).
A5	N240656	With flat, clear roundel for 10° deflection up, with painted risers; assembly with prisms out for searchlight dwarf signals.
A6	N317812	With flat, clear roundel for 30° deflection to left.
A7	N437953	With Lexan roundel, clear, plain, flat.
A8	N391732	Without roundel

TABLE 2

PHANKILL, LENS RING AND MOUNTING HARDWARE FOR H-2 SEARCHLIGHT and MCL-100 COLOR LIGHT SIGNALS

	APPLICATION TO SIGNALS	LENS RING (REF. B)	PHANKILL (REF. C)	SCREW (REF. D)
INCLINED COVER GLASS	New	–	–	M451358-1928 (2 required)
	Existing	N260573	–	M451358-1928 (2 required) M451358-0606 (3 required)
INCLINED COVER GLASS WITH PHANKILL UNIT	New	–	N143504	M451358-1944 (2 required)
	Existing	N260573	N143504	M451358-1944 (2 required) M451358-0606 (3 required)
INCLINED COVER GLASS WITH PHANKILL UNIT*	Existing	N260573	N143504	M451358-1944 (2 required) M451358-0606 (3 required)
INCLINED COVER GLASS ADAPTER WITH STENCIL**	New	–	–	M451358-1928 (2 required)
	Existing	N260573	–	M451358-1928 (2 required) M451358-0606 (3 required)

FOR DWARF SEARCHLIGHT SIGNALS PHANKILL UNIT

PHANKILL UNIT	New	–	N255913	M441358-1944 (2 required)
	Existing	N260573	N255913	M441358-1944 (2 required) M441358-0606 (3 required)

*For use with lens J053738 (H-2 Searchlight Signal Only).
**Select references for proper stencil.

PHANKILL, LENS RING, AND MOUNTING HARDWARE FOR MCL-101 MARKER LIGHT SIGNALS

INCLINED COVER GLASS

	APPLICATION TO SIGNALS	LENS RING (REF. B)	PHANKILL (REF. C)	SCREW (REF. D)
INCLINED COVER GLASS	New	–	–	M451358-1928 (2 required)
	Existing	N260575	–	M451358-1928 (2 required) J051686 (3 required)
INCLINED COVER GLASS WITH PHANKILL UNIT	New	–	N143504	M451358-1944 (2 required)
	Existing	N260575	N143504	M451358-1944 (2 required) J051686 (3 required)
INCLINED COVER GLASS ADAPTER WITH STENCIL*	New	–	–	M451358-1928 (2 required)
	Existing	N260575	–	M451358-1928 (2 required) J051686 (3 required)

*Select references for proper stencil.

ROUNDELS

ORDERING INFORMATION

Roundels may be ordered separately. Standard roundels available are listed below. Determine by description the type roundel desired and order by part number and description in caps.

PART NO.	DESCRIPTION
N222600	ROUNDEL, clear, flat for 10° deflection to left.
N199883	ROUNDEL, clear, flat, for 20° deflection to left.
N216441	ROUNDEL, clear, flat, for 30° spreadlight (15° left, 15° right(.
N249111	ROUNDEL, clear, flat, plain
N182209	ROUNDEL, clear, convex, for 16° spreadlight (8° left, 8° right(.
N178328	ROUNDEL, clear, convex, diffusing Type E
N256211	ROUNDEL, clear, flat, for 10° deflection up (painted risers).
N269577	ROUNDEL, clear, flat, for 10° deflection left, 10° deflection down.
N269719	ROUNDEL, clear, flat, for 10° defelction right, 10° deflection down.
N317811	ROUNDEL, clear, flat, for 30° deflection left.
N437954	ROUNDEL, LEXAN, clear, flat, plain.

SWITCHES

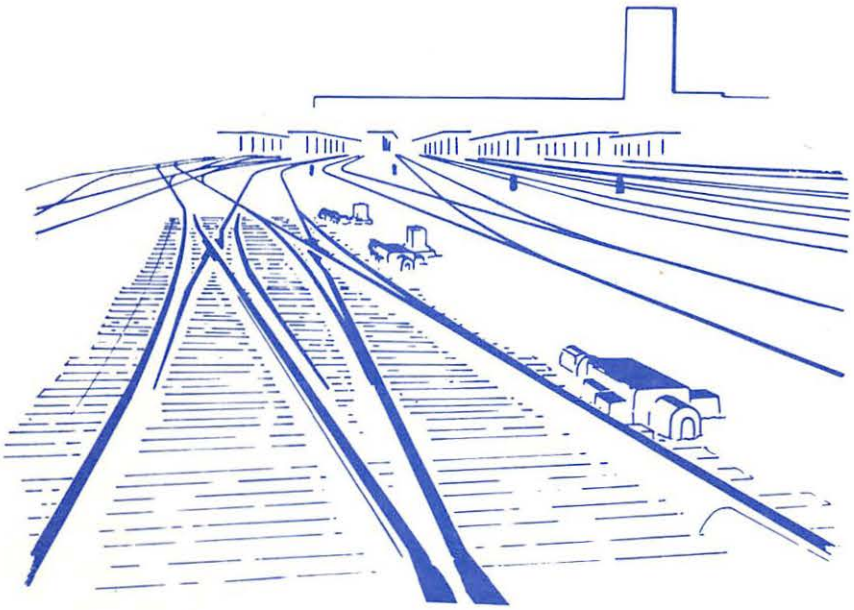

RSE-3

SWITCHES

MAINLINE SWITCH MACHINES

M-3, M-23A, and M-23B Electric Switch Machines RSE-3A1
A-5 Electro-Pneumatic Switch Machine RSE-3A2

T-20 and T-21 Hand Operated Switch Machines RSE-3A4

YARD SWITCH MACHINES

DA-10 Electro-Pneumatic Switch Machine RSE-3B1
YM-4 Electric Switch Machine RSE-3B2

NA-15 Electro-Pneumatic Switch Machine RSE-3B4

TRANSIT SWITCH MACHINES

A-10 Electro-Pneumatic Switch Machine RSE-3C1

AUXILIARY EQUIPMENT

U-5 Switch Circuit Controller RSE-3D1
CP Switch Valve RSE-3D2
SL-6A Electric Switch Lock RSE-3D3
SL-21A Electric Switch Lock RSE-3D4
SL-25 and SL-26 Electric Switch Lock RSE-3D5
Air Compressor Units RSE-3D6

ACCESSORIES

Operating Rods for Switch Circuit Controllers RSE-3E1
Rubber Mounted Operating Rods for Switch Circuit Controllers RSE-3E2
Roller Bearing Assembly for Switches RSE-3E3
Swivel Front Rods and Swivel Point Lugs for Switches RSE-3E4
Point Detector Bars and Lock Rods for M-3, M-23A, and M-23B Switch Machines RSE-3E5

A-5 ELECTRO-PNEUMATIC SWITCH MACHINE

A-5 Electro-Pneumatic Switch Machines are designed for use with single switches, single-slip switches, and/or moveable point frogs. They may be readily adapted to right- or left-hand switch layouts without additional parts. The A-5 is a time-proven, reliable switch machine which includes point detection in the circuit controller.

DESCRIPTION

The A-5 Electro-Pneumatic Switch Machine consists of an air cylinder, slide bar, and a single escapement crank for single switch, single-slip switch, and double-slip switch applications. Two escapements cranks are provided for moveable point frog applications. Three different size air cylinders are used. A 5" air cylinder is used for single, and single-slip switches; a 6"cylinder is used for double-slip switch applications. Moveable point frog machines are furnished with either a 6" or a 7" diameter cylinder. The cylinders are designed with a 12" stroke for driving the slide bar. Switch machines for all applications contain a circuit controller and a base plate, with holes, for direct mounting to the switch ties.

AIR CYLINDER

The air cylinder sizes have been proportioned so that various machines, when applied to the proper layouts, will operate satisfactorily under ordinary conditions on a minimum air pressure of 50 pounds per square inch.

SLIDE BAR

The slide bar is driven by the air cylinder through a 12" stroke. As the slide bar moves, a roller on the slide bar engages an escapement crank to transmit motion to the switch operating rod to move the points. A friction lock provides sufficient resistance against creepage of the slide bar.

ESCAPEMENT CRANK

The escapement crank is provided with an adjustable operating rod arm which may be adjusted to satisfy any switch stroke in common use. Additionally, it has ample motion in the switch basket for meeting any increased switch stroke that may develope due to wear or shifting of the stock rail.

FEATURES

- Meets applicable AAR requirements.
- Operates on a minimum air pressure of 50 lbs. per square inch.
- Adjustable operating rod arm.
- Ample motion in switch basket to adjust stroke for wear or shifting stock rail.
- Friction lock to resist slide bar creepage.
- Provision for manual operation.

CIRCUIT CONTROLLER

The A-5 switch machines employ a circuit controller which is jointly operated by the slide bar and by the point detector bar(s). The circuit controller consists of a contact point arrangement for detecting if the switch points are closed and locked in position. The circuit controller also opens the battery circuit and shunts the control wires of the WP relay during the time the switch mechanisms or switch points are in an intermediate position. In addition, it provides a means for closing the lock valve magnet (restoring) circuit to admit air to the cylinder should the machine movement be improperly out of its fully locked position.

PHYSICAL ARRANGEMENT

Overall and mounting dimensions of the switch machines are shown on the opposite page. These dimensions will be found useful for locating and/or applying a switch machine to a switch layout.

The A-5 switch machine can be used in either a right- or left-hand layout. All machines can be readily adapted from one layout to another; all parts are interchangeable. Procedures for changing a machine to fit the opposite layout are covered in the applicable service manual for that switch machine.

A-5 ELECTRO-PNEUMATIC SWITCH MACHINE LAYOUT

ORDERING INFORMATION

The switch machine layout shown is typical for the A-5 Switch Machine. This layout shows general configurations and is to be used in conjunction with the following ordering information. Orders for complete switch, movable point frog, derail layouts, and fittings such as gage plates, operating rods, front rods, lock rods, etc. should be accompanied with the following information:

1. Track plan showing;
   a. Weight and section of rail.
   b. Length of switch rail.
   c. Switch point dimensions U-V-W-X-Y-Z and size of holes T.
   d. Cross section of ties giving face and depth. Plan should show spacing of ties and dimension from end of point to edge of point tie.
   e. Distance of switch mechanism from gage, S dimension on layout.
   f. Distance P between center of switch rod and end of switch point.
2. State whether right- or left-hand layout.
3. Specify switch machine desired, accessories or options
4. Advise number of crossover, and distance between frog points for MPF layouts.
5. To order the type "CP" Switch Valve, refer to Catalog Section RSE-3D2; Specify voltage for dc valves.
6. Turnout dimensions.

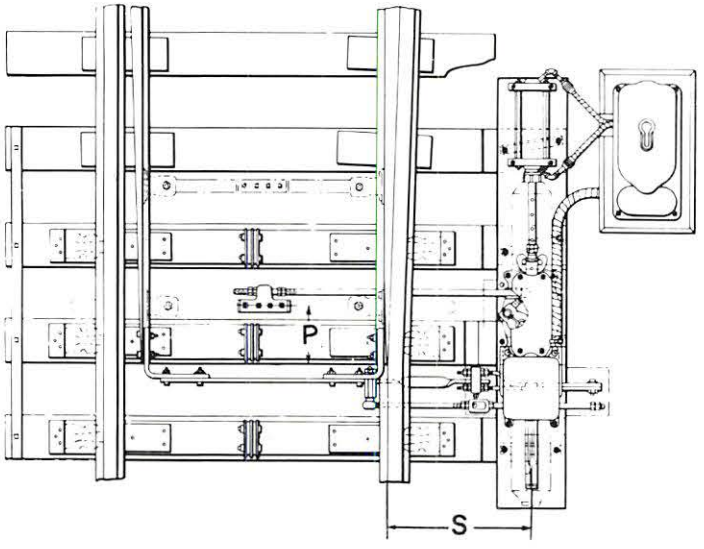

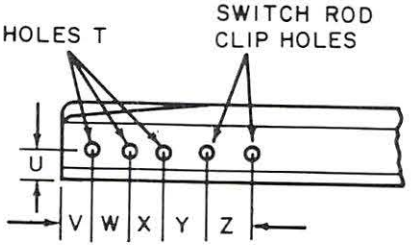

A-5 ELECTRO-PNEUMATIC SWITCH MACHINES

Illustration below shows dimensions for single switches and double switches only. Dimensions for moveable point frog machines will be furnished upon request.

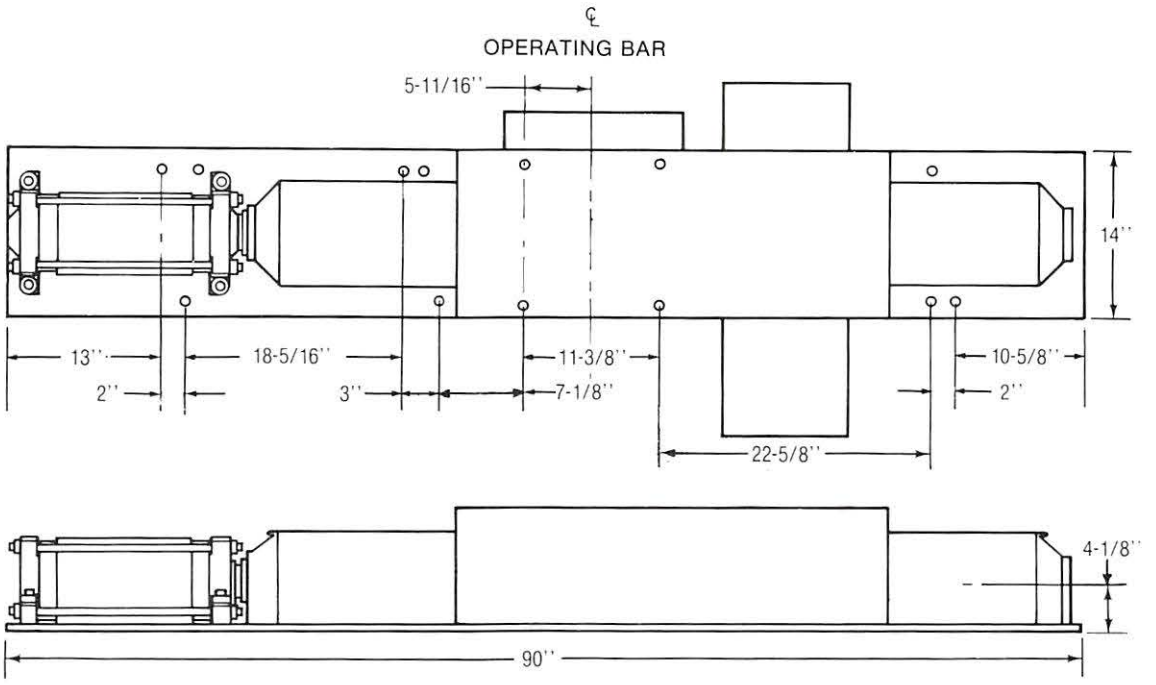

PART NO.		DESCRIPTION
W/O COVER	WITH COVER	
N181788	X185220	A-5 SWITCH MACHINE, left hand layout, 5" cylinder
N181789	X185221	A-5 SWITCH MACHINE, right hand layout, 5" cylinder
N294251	X294255	A-5 SWITCH MACHINE, left hand layout, 5" cylinder, with heater
N294252	X294256	A-5 SWITCH MACHINE, right hand layout, 5" cylinder, with heater
N294253	X294257	A-5 SWITCH MACHINE, right hand layout, 6" cylinder, with heater for double slip switch
N294254	X294258	A-5 SWITCH MACHINE, left hand layout, 6" cylinder,with heater for double slip switch
N294266	X294268	A-5 SWITCH MACHINE, left hand layout, 6" cylinder, with heater for moveable point frog
N294267	X294269	A-5 SWITCH MACHINE, right hand layout, 6" cylinder, with heater for moveable point frog
N294266-0002	X294268-0001	A-5 SWITCH MACHINE, left hand layout, 7" cylinder, with heater for moveable point frog
N294267-0002	X294269-0001	A-5 SWITCH MACHINE, right hand layout, 7" cylinder, with heater for moveable point frog

NOTE: For detail parts and additional information, refer to service manual SM5044.

T-20 AND T-21 HAND OPERATED SWITCH MACHINES

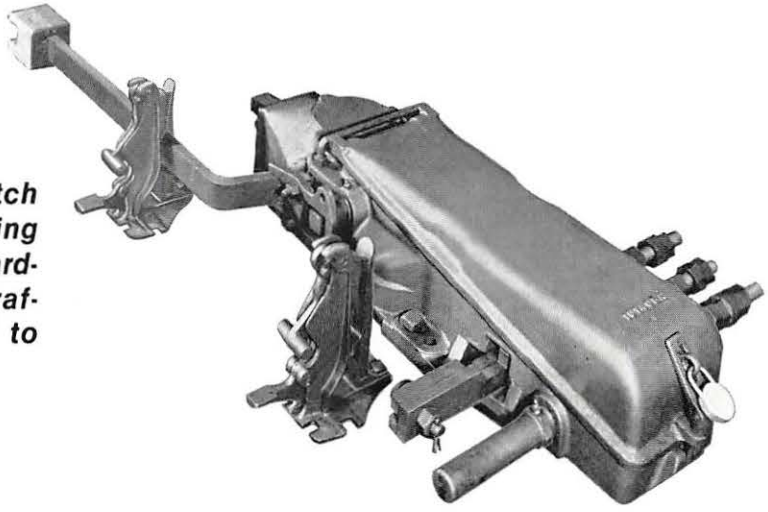

The T-20 and T-21 Hand Operated Switch Machines are used for switches where facing point lock protection is required for safeguarding the movement of high speed mainline traffic over a switch. They may be applied to single switches and crossover switches.

The T-20 and T-21 Hand Operated Switch Machines are rack and escapement crank type equipped with a circuit controller. The complete operating mechanism is enclosed in a rugged cast iron case with a lockable cover.

The T-21 Switch Machine is a T-20 equipped with a switch target drive mechanism; simple in design and positive in its operation.

LOCK ROD AND PLUNGER

This switch machine contains a lock bar which, with the switch in the normal position, enters a notch in the lock rod, thereby locking the switch points in their normal position to afford facing point lock protection. In addition, the escapement crank mechanism is such that the driving system itself locks the switch in either extreme position.

CIRCUIT CONTROLLER

The circuit controller consists of a maximum of four normally open or closed contacts, which are operated jointly by the lock rod and the point detector bar. These contacts indicate whether or not the switch is in the proper position for facing point moves. The standard circuit controller arrangement can be fitted with a reverse point detector device consisting of four additional pairs of contacts, which indicate the switch points in the reverse position.

PHYSICAL ARRANGEMENT

The T-20 and T-21 Switch Machines can be used in either a right- or left-hand layout. All machines can be readily adapted from one layout to another; all parts are interchangeable. Procedures for changing a machine to fit the opposite layout are covered in the applicable service manual for that switch machine.

Overall and mounting dimensions of the switch machines are shown on page 2. These dimensions will be found useful for locating and/or applying a switch machine to a switch layout.

FEATURES

- Meets applicable AAR requirements.
- Optional reverse point detector.
- Target drive mechanism - T-21 Switch Machine.
- Adaptable to right- or left-hand layouts.
- Built-in circuit controller and point detector.

PRINTED IN USA

UNION SWITCH & SIGNAL DIVISION
AMERICAN STANDARD INC. / SWISSVALE, PA 15218

RSE-3A4
REV. 8/82

T-20 AND T-21 SWITCH MACHINES

Order the T-20 Switch Machine from the tabulation below. Mounting lugs. hardware, and fittings must be ordered separately. To order a T-21 Switch Machine, refer to the tabulation and order the desired T-20 Switch Machine; then, order a low (15-5/8") or a high (7'-5 11/16") target staff by Part Number.

LOW TARGET STAFF
PART NO. N383606

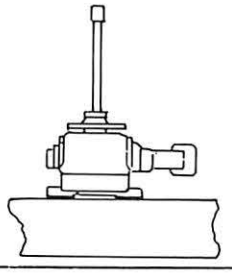

HIGH TARGET STAFF
PART NO. N383607

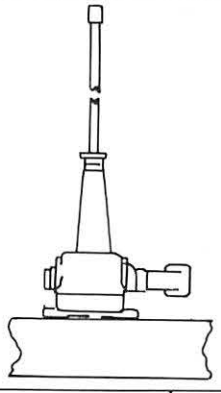

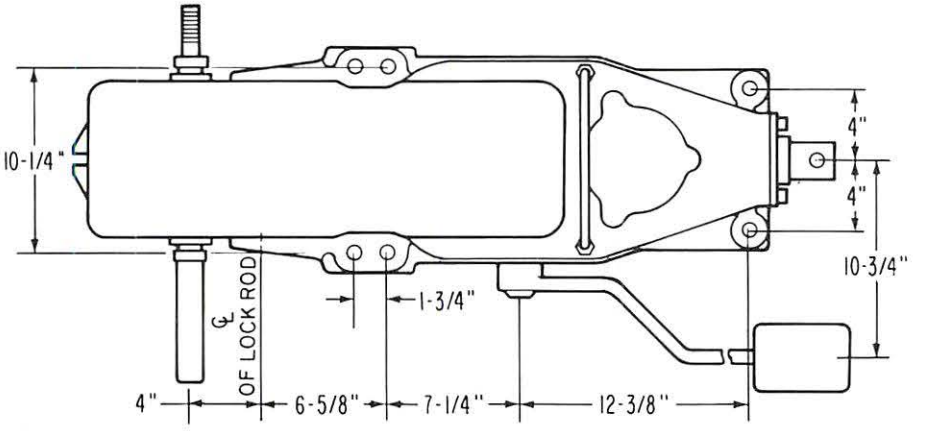

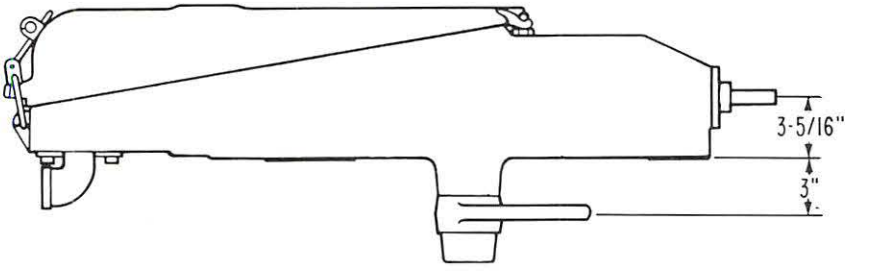

PART NO.	CONTROLLER CONTACTS	REVERSE POINT DET.	SWITCH POINT LAYOUT	CLOSED	LOCK BAR
N103552 *	4 OPEN	W/O	R.H.	R.H.	RACK DRIVEN
N103896 *	HEAVY DUTY	W/O	R.H.	R.H.	RACK DRIVEN
N212768 *	4 OPEN	W/O	L.H.	L.H.	RACK DRIVEN
N212769	4 OPEN	W/O	L.H.	L.H.	INDEPENDENT
N212788	4 OPEN	W/O	R.H.	R.H.	INDEPENDENT
N212789 *	HEAVY DUTY	W/O	L.H.	L.H.	RACK DRIVEN
N212795 *	HEAVY DUTY	W/O	L.H.	L.H.	INDEPENDENT
N214732 *	HEAVY DUTY	W/O	R.H.	R.H.	INDEPENDENT
N385635-0002	2 OPEN 2 CLOSED	W/O	L.H.	L.H.	RACK DRIVEN
N385635-0003	2 OPEN 2 CLOSED	W/O	L.H.	R.H.	RACK DRIVEN
N385636	4 OPEN	W/O	R.H.	R.H.	RACK DRIVEN
N385636-0002	4 OPEN	W/O	L.H.	L.H.	RACK DRIVEN
N385637	2 OPEN 2 CLOSED	WITH	R.H.	R.H.	RACK DRIVEN
N385637-0002	2 OPEN 2 CLOSED	WITH	L.H.	L.H.	RACK DRIVEN

*With external heavy duty terminals.

NOTE: For detail parts and additional informaton, refer to service manual SM5417.

T-20 or T-21 SWITCH MACHINE LAYOUT

ORDERING INFORMATION

The layout shown is typical for the T-20 or T-21 Switch Machine. This layout shows general configurations and is to be used in conjunction with the following ordering information.

Orders for complete switch, derail layouts, and fittings such as gage plates, operating rods, front rods, lock rods, etc., should be accompanied with the following information:

1. Track plan showing:
   a. Weight and section of rail.
   b. Length of switch rail.
   c. Switch point dimensions U-V-W-X-Y and Z, and size of holes T.
   d. Cross section of ties giving face and depth. Plan should show spacing of ties and dimension from end of point to edge of point tie.
   e. Distance of mechanism from gage, S dimension on layout.
   f. Distance P between center of switch rod and end of switch point.
2. Plan showing design and dimensions of rail braces, switch rods, and rail clips (furnished by railroad).
3. Unless otherwise specified, we will furnish weatherproof type of adjusting bracket for switch rod.
4. Plan showing design and dimensions of gage, riser, and butt plates if furnished by railroad.
5. State whether right- or left-hand layout and whether point adjacent to the machine is to be normally open or closed.

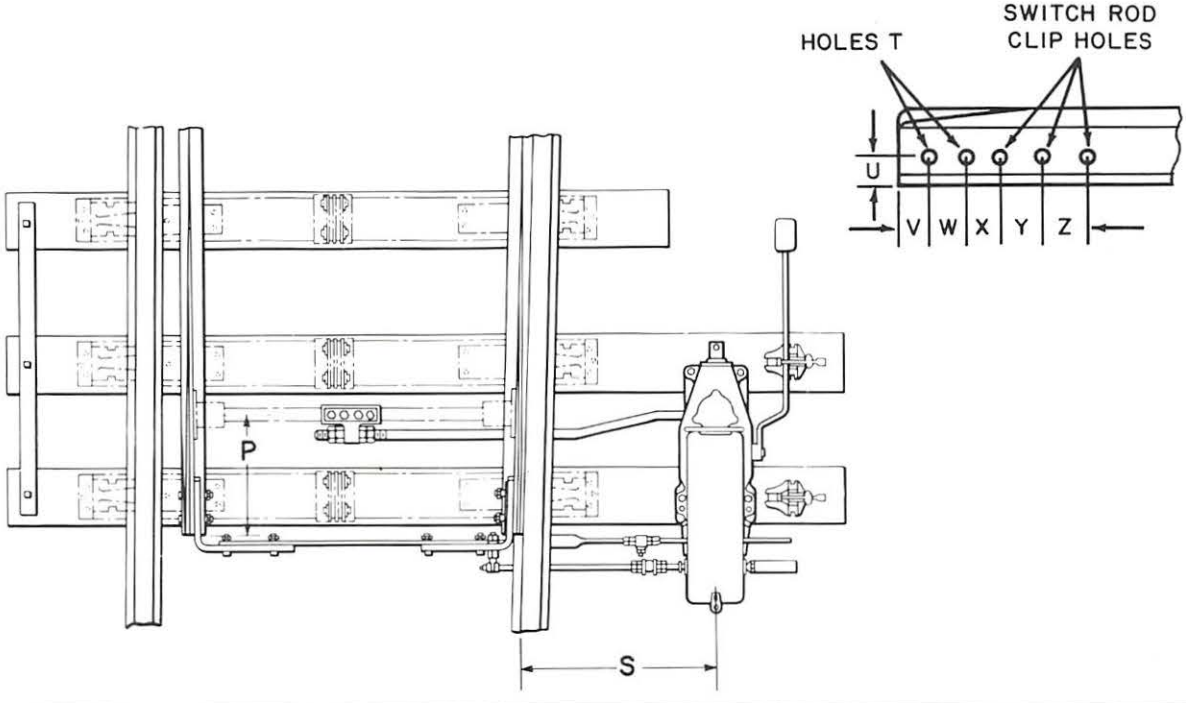

DA-10 ELECTRO-PNEUMATIC SWITCH MACHINE

The DA-10 Electro-Pneumatic Switch Machine is an extremely fast, direct acting machine suitable for a wide variety of yard applications.

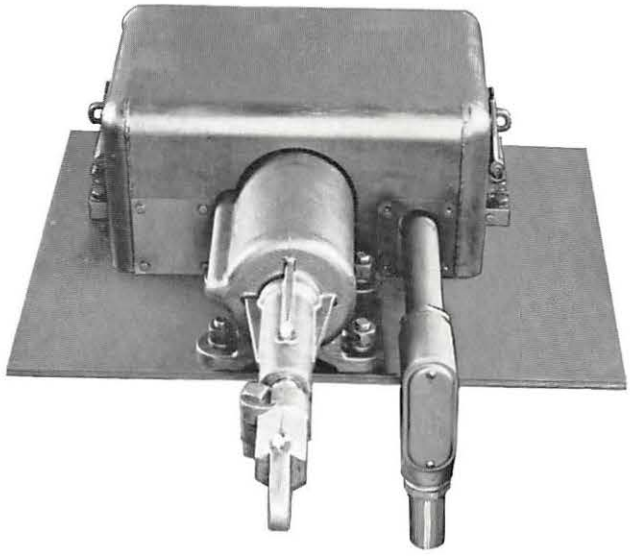

DESCRIPTION

The basic switch machine consists of a double-acting, five inch diameter cylinder with a Pilotair® valve, and two magnet valves mounted on the cylinder head. The piston operates with a six inch stroke and is designed to operate on 55 to 150 pounds of cylinder air pressure. A 12 to 24 volt supply is required to operate the magnet valves. With a 100 pound air pressure and a 22 volt supply, the DA-10 Switch Machine completes one operation (switch normal-to-reverse or reverse-to-normal) in approximately 0.4 second. Since air under pressure is always connected to one end position, the switch piston will always be either extended or retracted, holding the switch in position. Switch point slamming is prevented because air near the end of the stroke is vented through two "choked"exhaust ports.

Two magnet valves, either 130 or 400 ohms, are electrically controlled and feed air to a Pilotair valve. The Pilotair valve controls the flow of air which drives the piston and also provides exhaust ports for venting the cylinder. Suitable lubrication fittings are provided to insure a minimum of friction during piston rod travel.

PHYSICAL ARRANGEMENT

The DA-10 Switch Machine can be used in either a right- or left-hand layout. All machines can be readily adapted from one layout to another; all parts are interchangeable. Procedures for changing a machine to fit the opposite layout are covered in the applicable service manual for that switch machine.

Overall and mounting dimensions of the switch machine are shown on pages 2 and 3. These dimensions will be found useful for locating and/or applying a switch machine to a switch layout.

FEATURES

- Meets applicable AAR requirements.
- Cylinder cast in one piece insures accurate alignment.
- Fast acting switch movement.
- Trailable.
- Operates on 55 to 150 psi.
- Choked exhaust ports prevent switch point slamming.

DA-10 ELECTRO-PNEUMATIC SWITCH MACHINES

Order the DA-10 Electro-Pneumatic Switch Machine from the tabulation below. Cover, base plate, mounting lugs, hardware, and fittings should be ordered separately.

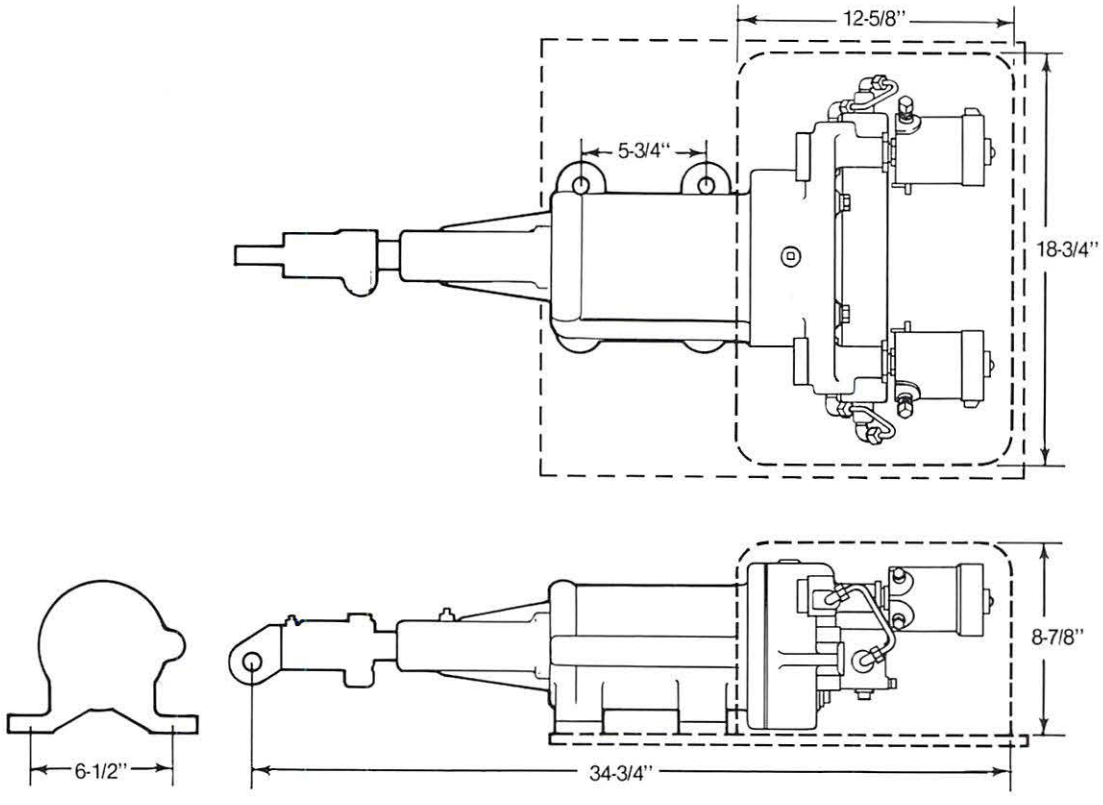

PART NO.	DESCRIPTION
N372277	DA-10 ELECTRO-PNEUMATIC SWITCH MACHINE, with 130 ohm magnetic coil. Does not include cover and base plate.
N394172	DA-10 ELECTRO-PNEUMATIC SWITCH MACHINE, with 400 ohm magnetic coil. Does not include cover and base plate.
N372039	COVER
N372070	BASE PLATE

NOTE: For detail parts and additional information, refer to service manual SM5708.

DA-10 SWITCH MACHINE LAYOUT

ORDERING INFORMATION

The layout shown is typical for the DA-10 Switch Machine. This layout shows general configurations and is to be used in conjunction with the following ordering information.

1. Track plan showing:
   a. Weight and section of rail.
   b. Length of switch point.
   c. Switch point dimensions U-V-W-X-Y and Z, and size of holes T.
   d. Cross section of ties giving face and depth. Plan should show spacing of ties and dimension from end of point to edge of point tie.
2. State whether right- or left-hand layout is required.

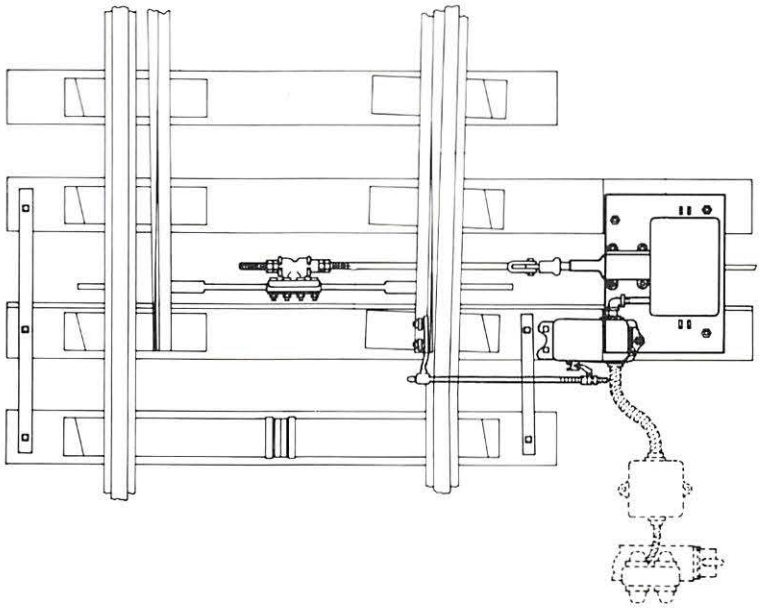

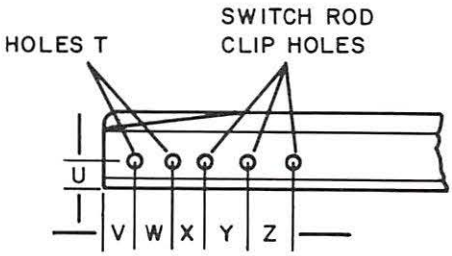

Options, shown in dotted line, include the ES-20 Signals and Junction Boxes. Refer to applicable catalog section for Ordering Information.

YM-4 ELECTRIC SWITCH MACHINE

The YM-4 is a trailable, dual control Electric Switch Machine for rail transit systems and yards where an electrically powered machine is required. It is designed for use in transit yards, receiving and departure areas of classification yards, industrial sidings and flat switching or storage yards.

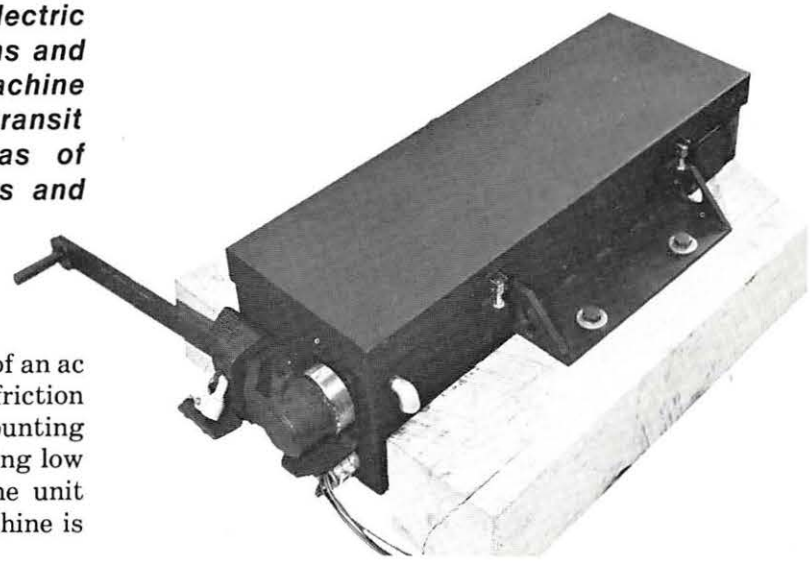

DESCRIPTION

The YM-4 Electric Switch Machine consists of an ac or dc electric motor, gear box assembly, friction clutch and operating crank. The case has mounting lugs for securing it between the ties, providing low profile for clearances to permit locating the unit close to the tracks. Total weight of the machine is approximately 450 pounds.

DUAL CONTROL OPERATION

The YM-4 is a dual control switch machine, which is powered by an electric motor or operated by hand. The motor drives the switch through a friction clutch and crank. The clutch disengages the motor during the manual and trailing operations. When the hand throw lever is unlocked for manual operation, the electrical circuits are disabled. The hand throw lever can be padlocked when not in use. The YM-4 is reversible in mid stroke without damage to the internal mechanisms.

TRAILABLE

The YM-4 is equipped with a strong toggle spring mechanism that ensures point closures with a minimum of 1000 lbs. holding force. Trailing through a YM-4 switch reverses the mechanism and allows cars to pass through without damaging the machine. Once completed, the switch mechanism remains in the trailed position. In the event of power failure, the YM-4 will still trail to the opposite direction, and maintain its holding force.

Two pair of independently adjustable switches are provided. One pair consists of SPDT switches which are used in a holding circuit, and one pair of DPDT switches which are used for motor cut-out, non-vital point indication, and local indication (lights).

FEATURES

- Trailable by toggle spring mechanism.
- Easily mounted for right- or left-hand application.
- Low profile between ties mounting.
- Easily maintained from the top.
- All hardened gear teeth for longer wear.
- Instantaneous reversing motor.
- Dual control, with lockable hand throw lever.
- Optional cover with built-in signal lights.
- Adjustable straight stroke rod allows YM-4 to be used with different track switches.
- Contains two pair of independently adjustable switches for control applications.
- Reversible in mid stroke.
- All gear drive, with clutch to disengage motor during manual and trailing operations.
- Motor provided with thermal overload protection.
- Ambient compensated bimetal thermal overload relay to sense motor current.

APPLICATIONS

The YM-4 Switch Machine can be used in either a right or left-hand layout without adjustment. All machines can be readily adapted from one layout to another and all components are interchangeable.

In order to prevent throwing a switch occupied by a car, the use of track detector circuits is recommended. When using such circuits, they should be deployed at a distance far enough in front of the switch point to enable the switch to complete its motion before the car reaches the points. Care should be exercised to ensure that the circuit is of sufficient length to prevent long wheel-based equipment from spanning the circuit.

COVER WITH POSITION LIGHTS

The YM-4 may be ordered with a cover which includes 4½" diameter switch position indicator lights. Refer to the tabulation on page 3.

YM-4 SWITCH MACHINE LAYOUT WITH CIRCUIT CONTROLLER

ORDERING INFORMATION

The switch machine layout shown is typical for the YM-4 Electric Switch Machine with optional U-5 circuit controller. This layout shows a general configuration. Orders for complete switch layouts should be accompanied with the following information.

1. Track plan showing;
   a. Weight and section of rail.
   b. Length of switch rail.
   c. Switch point dimensions U-V-W-X-Y-Z and size of holes T.
   d. Cross section of ties giving face and depth. Plan should show spacing of ties and dimension from end of point to edge of point tie.
2. Plan showing design and dimensions of rail braces, switch rods, and rail clips (furnished by the railrod).
3. Plan showing design and dimensions of gage, riser, and butt plates if furnished by the railroad.
4. State whether right- or left-hand layout.
5. Specify part number for switch machine desired.

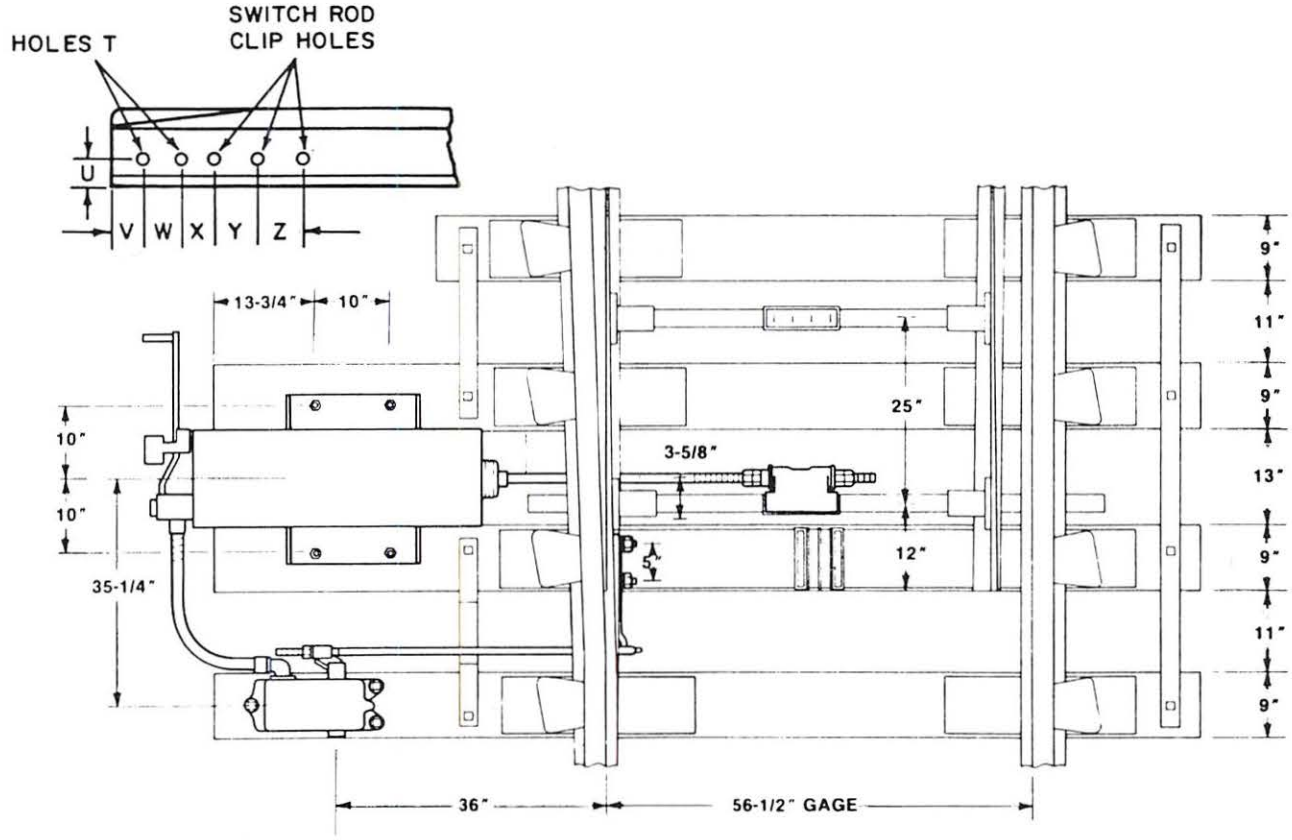

YM-4 ELECTRIC SWITCH MACHINE

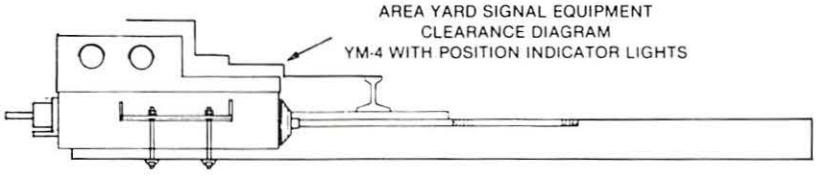

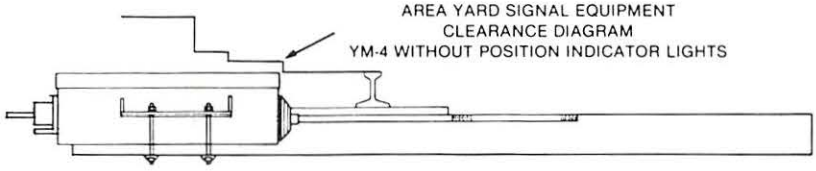

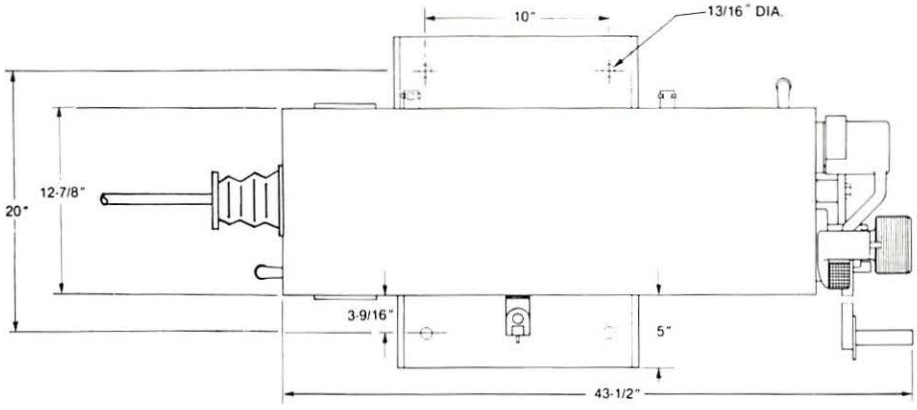

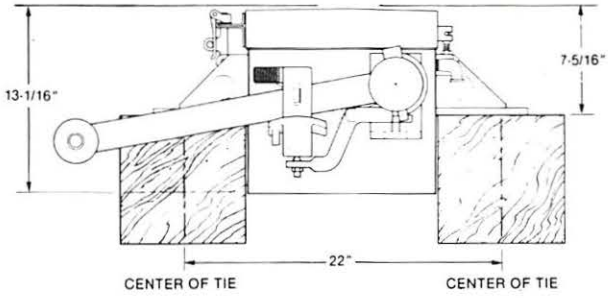

PART NO.	DESCRIPTION	MOTOR VOLTAGE	CONTROL VOLTAGE	INDICATION LIGHTS
N451613-0101	YM-4 SWITCH MACHINE	115VAC	115VAC	—
N451613-0102	YM-4 SWITCH MACHINE	115VAC	115VAC	Green/ Yellow, glass
N451613-0103	YM-4 SWITCH MACHINE	230VAC	115VAC	—
N451613-0104	YM-4 SWITCH MACHINE	115VAC	115VAC	Lunar White/Red, plastic
N451613-0105	YM-4 SWITCH MACHINE	115VAC	115VAC	Green/Yellow, plastic
* N451613-0106	YM-4 SWITCH MACHINE	115VAC	115VAC	Green/Yellow, glass
N451613-0107	YM-4 SWITCH MACHINE	230VAC	115VAC	Yellow/Green, plastic
N451613-0108	YM-4 SWITCH MACHINE	115VAC	115VAC	Red/Yellow/Green, plastic
N451613-0201	YM-4 SWITCH MACHINE	115VAC	24-28VDC	—
N451613-0301	YM-4 SWITCH MACHINE	115VDC	12VDC	—

*With frost heater and thermostat.

NOTE: For detail parts and additional information, refer to service manual SM6231.

NA-15 ELECTRO-PNEUMATIC SWITCH MACHINE

The NA-15 Electro-Pneumatic Switch Machine is a rugged, reliable, direct acting machine especially designed for yard applications. The NA-15 is a dual control, trailable switch machine, and may be adapted to either a right- or left-hand switch layout.

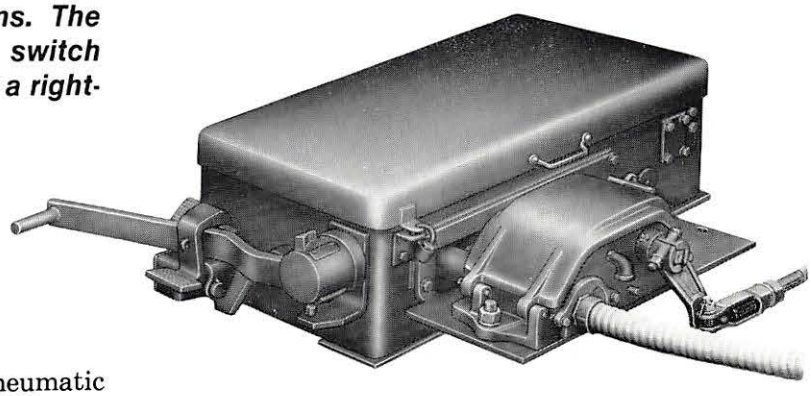

DESCRIPTION

The NA-15 Switch Machine is an electro-pneumatic direct action machine equipped with a toggle spring and dual-control facilities. Used with the U-5 switch circuit controller, the NA-15 is designed especially for installation in yards. The spring-loaded toggle action permits trailing of the switch without damage, yet holds the switch closed in either the normal or reverse position, with sufficient force to permit facing-point moves at normal yard speeds.

The NA-15 Switch Machine comes with a 6 inch diameter cylinder for use with 65 to 90 psi air pressure. The valve magnets usually furnished are 400 ohm type for operation with nominal 14 volts dc, but magnets for other voltages are available (as used in CP valves).

DUAL CONTROL OPERATION

Dual control, either hand operated or power operated, is a feature of the NA-15 Switch Machine. The control lever can be locked after hand operation to prevent tampering.

If desired, cut-out contacts are available, as an operational feature, which interrupt the magnet circuit upon opening of the shut-off valve latch. A test clip is also provided to enable the valve magnet circuit to be opened whenever it is desireable to operate the valve magnets manually.

PHYSICAL ARRANGEMENT

All machines can be readily adpated from one layout to another; all parts are interchangeable. Procedures for changing a machine to fit the opposite layout are covered in the applicable service manual for that switch machine.

Overall and mounting dimensions of the NA-15 Switch Machine are shown on the opposite page. These dimensions will be found useful for locating and/or applying a switch machine to a switch layout.

FEATURES

- Dual-Control.
- Trailable.
- Allows facing-point moves at normal yard speed.
- Economical to operate.
- Meets applicable AAR requirements.

NA-15 ELECTRO-PNEUMATIC SWITCH MACHINE

Order the NA-15 Switch Machine from the tabulation below. If cut-out contacts are desired, specify.

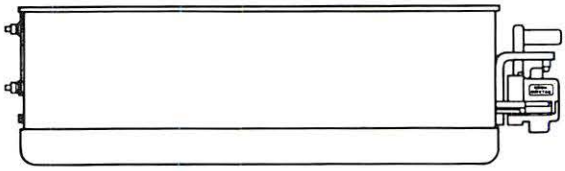

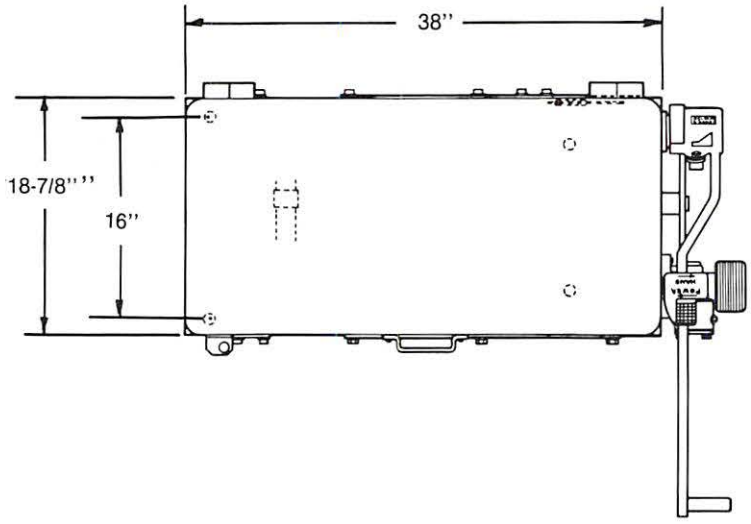

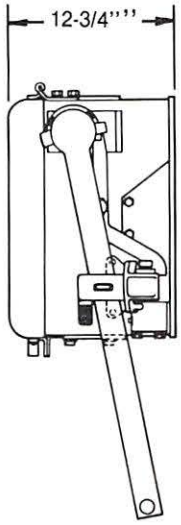

PART NUMBER	DESCRIPTION
N303707	NA-15 SWITCH MACHINE, right hand layout, with 400-ohm dc magnets, two piece caps with finger holes, 6" cylinders.
N303708	NA-15 SWITCH MACHINE, left hand layout, with 400-ohm dc magnets, two piece caps with finger holes, 6" cylinders.

NOTE: For detail parts and additional information, refer to service manual SM5495.

NA-15 ELECTRO-PNEUMATIC SWITCH MACHINE LAYOUT

ORDERING INFORMATION

The switch machine layout shown is typical for the NA-15 Switch Machine. This layout shows general configurations and is to be used in conjunction with the following ordering information.

Orders for a complete switch layout should be accompanied with the following information.

1. Track plan showing:
   a. Weight and section of rail.
   b. Length of switch rail.
   c. Switch point dimensions U-V-W-X-Y and Z, and size of holes T.
   d. Cross section of ties giving face and depth. Plan should show spacing of ties and dimension from end of point to edge of point tie.
   e. Distance P between center of switch rod and end of switch point.
2. State whether right- or left-hand layout is required.
3. Specify Switch Machine desired, stating any accessories or options.

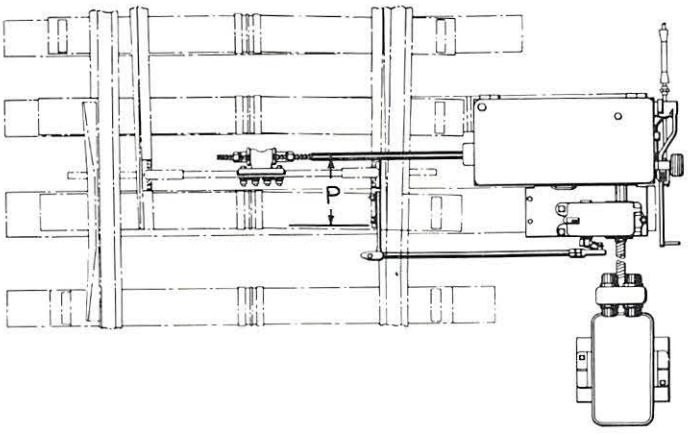

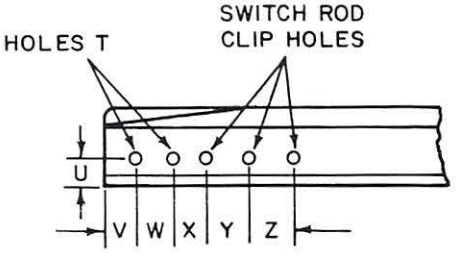

A-10 ELECTRO-PNEUMATIC SWITCH MACHINE

The A-10 Electro-Pneumatic Switch Machine is a rugged, compact unit designed for single switches. This switch machine is especially suited for use in subways and places where space is restricted.

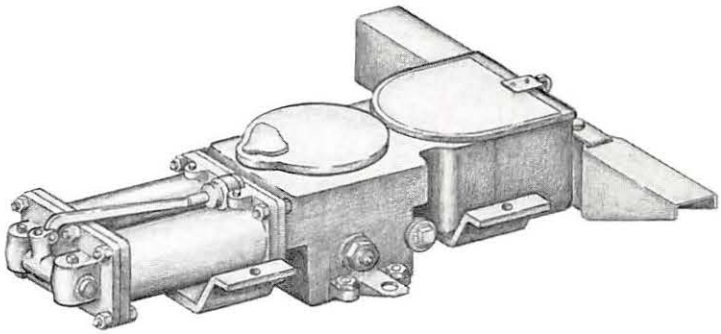

The A-10 Electro-Pneumatic Switch Machine is of the rack and pinion type. This machine has two identical single-acting air cylinders with identical piston assemblies, a vertical crank shaft, a circuit controller and a point detector mechanism. The switch assembly is encased in a rugged cast iron housing which contains mounting flanges for direct mounting to the railroad ties.

CIRCUIT CONTROLLER

The circuit controller indicates the switch points closed and locked in the normal or reverse position. Additionally, the circuit controller opens the indication power feed and shunts the control wires of the indication circuit during the time the switch machine and the switch points are in intermediate positions. It also provides a means for closing the lock valve magnet circuit, to admit air to the cylinder should the machine be out of its fully locked position.

POINT DETECTOR MECHANISM

The switch machine is provided with a radial arm point detector mechanism. Movement of the point detector arm causes a shift in the circuit controller contacts, which prevents the indication contacts from being made, unless both the machine and the switch point are in their full respective normal or reverse position. The point detector mechanism has been designed to escape wear from frequent operation of the switch, and from the severe vibration to which traffic subjects such devices. Compensation for the effects of switch stoke variation is accomplished by adjustment of external mechanical parts.

HAND OPERATION

The switch machine is provided with a hand crank for hand operation. For safety, the hand crank cannot be meshed with the hand crank gear until the valve yoke has been moved to cut off the air supply. Conversly, to return the machine to power operation, the hand crank must be removed.

PHYSICAL ARRANGEMENT

Overall and mounting dimensions are shown in the ordering information. These dimensions will be found useful for locating and/or applying a switch machine to a switch layout.

The A-10 Switch Machine can be used in either a right- or left-hand layout. All machines can be readily adapted from one layout to another; all parts are interchangeable. Procedures for changing a machine to fit the opposite layout are covered in the applicable service manual for that switch machine.

ACCESSORIES

Heaters are available for both motor and circuit controller compartments, and are recommended for extremely cold climates.

FEATURES

- Meets applicable AAR requirements.
- Rugged Construction.
- Readily adaptable to right- or left-hand installation.
- Hand operation provided with air shut-off feature for safety.
- Built-in circuit controller and point detector mechanism.

UNION SWITCH & SIGNAL DIVISION
AMERICAN STANDARD INC. / SWISSVALE, PA 15218

RSE-3C1
REV. 8/82

PRINTED IN U.S.A.

A-10 ELECTRO-PNEUMATIC SWITCH MACHINE
ORDERING INFORMATION

Order the A-10 Electro-Pneumatic Switch Machine from the tabulation below. Lock and operating rod covers, mouning lugs, hardware, and fittings must be ordered separately. Specify heater when required.

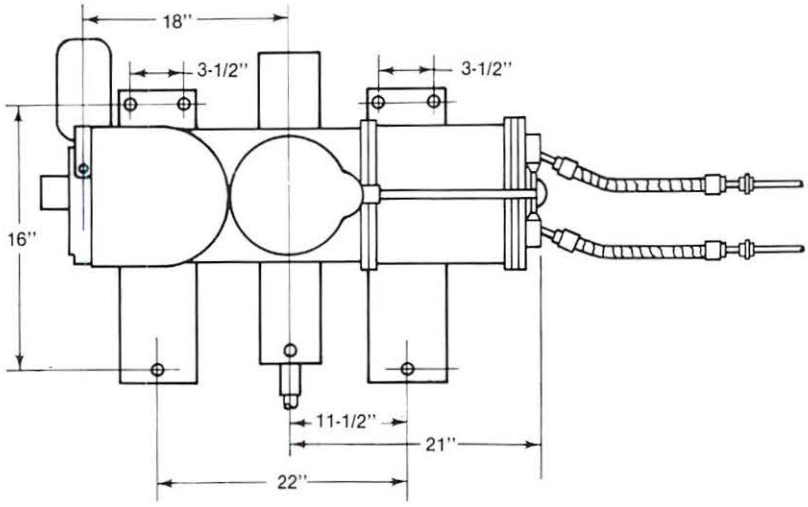

PART NO.	DESCRIPTION
N159020	A-10 ELECTRO-PNEUMATIC SWITCH MACHINE, right hand layout
N163419	A-10 ELECTRO-PNEUMATIC SWITCH MACHINE, left hand layout

A-10 ELECTRO-PNEUMATIC SWITCH MACHINE LAYOUT
ORDERING INFORMATION

The switch machine layout shown is typical for the A-10 Switch Machine. This layout show general configurations and is to be used in conjunction with the following ordering information. Orders for complete switch, movable point frog, derail layouts, and fittings such as gage plates, operating rods, front rods, lock rods, etc. should be accompanied with the following information:

1. Track plan showing;
   a. Weight and section of rail.
   b. Length of switch rail.
   c. Switch point dimensions U-V-W-X-Y-Z and size of holes T.
   d. Cross section of ties giving face and depth. Plan should show spacing of ties and dimension from end of point to edge of point tie.
   e. Dimension S - distance of switch mechanism from gage.
   f. Distance P between center of switch rod and end of switch point.
2. State whether a right- or left-hand layout.
3. Specify part number for switch machine desired, stating any accessories or options.
4. To order the type "CP" Switch Valve, refer to Catalog Section RSE-3D2 ; Specify voltage for dc valves.
5. Turnout dimensions.

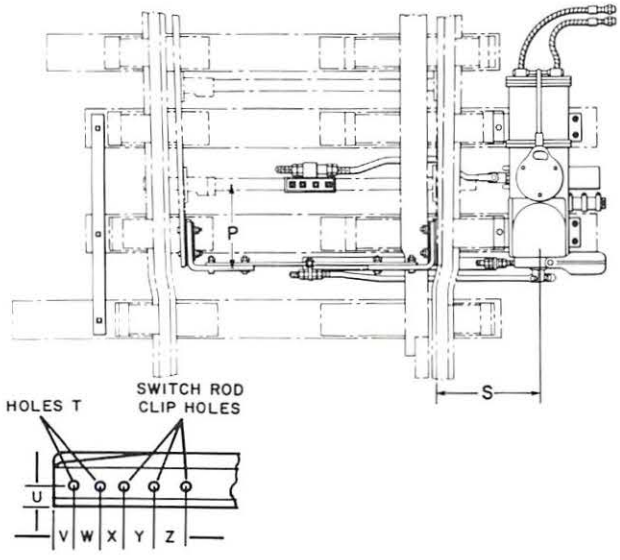

NOTE: For detail parts and additional information, refer to service manual SM5041.

U-5 SWITCH CIRCUIT CONTROLLER

The U-5 Switch Circuit Controller is a ruggedly constructed unit used for electrically detecting the position of rail switch points, available in either four or six-way sizes for two-position, three position, and polarized applications.

DESCRIPTION

A two-position controller may be used without change of parts for polarized applications by proper cam and circuit adjustments. A two-position controller may also be used as a three-position controller for two circuits by using two cam spaces for each three-position circuit and the proper cam adjustments.

A three-position controller for four circuits is obtained by substituting combined three-position cams in place of a two-position cam and the substitution of cam shaft.

CONSTRUCTION

The terminals, contacts, operating cams, and other components of the switch circuit controller are installed in a rugged steel weather-tight housing. A hinged cover provides easy access to the interior for inspection, adjustments, and maintenance of the parts.

Two elbow type ventilators provide for air circulation within this housing and minimizes condensation. The large 1-1/2 inch diameter shaft provides: A large bearing surface, reducing bushing wear; and a large surface area to engage the micrometer adjusting screw, preventing wear and the resulting loss in sensitivity. Shaft bearings are bronze with pressure grease fittings.

FEATURES

- Quick individual contact adjustment.
- Contacts positively driven (both directions).
- Rugged construction for long life and minimum maintenance.
- Parts easily accessible for inspection and replacement.
- Quick response of contacts to point movement — assures complete contact spring operation well within the limits of the applicable AAR requirements.

ORDERING INFORMATION

1. Determine application and requirements of the Switch Circuit Controller, i.e., use (standard application or classification yard), contact arrangement, cam arrangement, etc. Refer to tabulations.
2. Determine crank offset required. Two offsets are available; 3/4-inch and 2-13/32-inch. Consider tie location to determine what crank offset is to be ordered. See Application drawings.
3. Refer to the tabulations and order corresponding part number for the Switch Circuit Controller meeting your requirements.

OPERATING RODS

Refer to RSE-3E1 or RSE-3E2 for Ordering Information.

POINT DETECTOR LUGS

Refer to RSE-3E1 or RSE-3E2 for Ordering Information. Consider Z dimension when ordering lugs. See Application drawings.

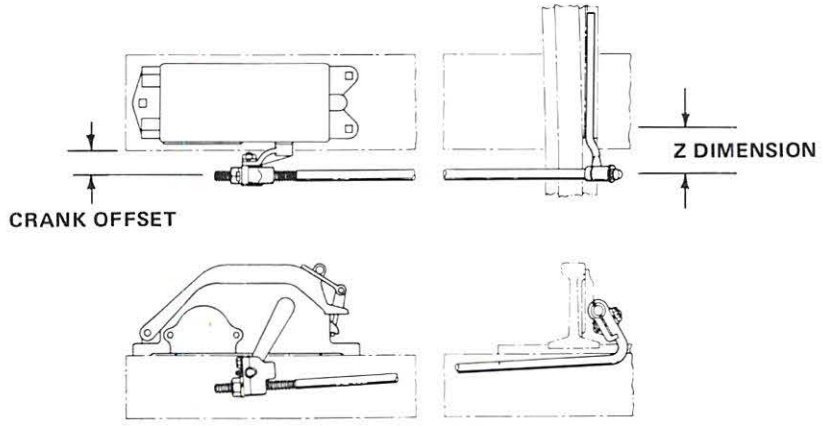

APPLICATION OF SWITCH CIRCUIT CONTROLLER TO NEAR SWITCH POINT

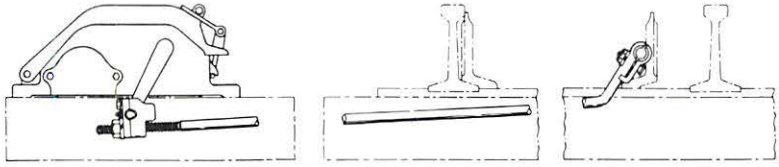

APPLICATION OF SWITCH CIRCUIT CONTROLLER TO FAR SWITCH POINT

WEIGHT INFORMATION:

Four way controller, including crank . . . . approx. 68 pounds

Six-way controller, including crank . . . . approx. 87 pounds

NOTE: For detail parts and additional information, refer to service manual SM4516.

U-5 SWITCH CIRCUIT CONTROLLER FOR STANDARD APPLICATIONS

(With Two Wire Guide Plates — One Blank and One With 1-1/2" Tapped Hole.)

FOUR-WAY (4F-4B DEPENDENT CONTACTS)

PART NO.	CAM	RETURN SPRING	CRANK OFFSET (See p. 2)			
			3/4" Offset		2-13/32" Offset	
			Insulated Ball Stud	Non-Ins. Ball Stud	Insulated Ball Stud	Non-Ins. Ball Stud
N184136	4-2 Pos.	Without	With			
N253925	4-2 Pos.	Without		With		
N190700	4-2 Pos.	Without			With	
N244167	4-2 Pos.	Without				With
N218085	4-2 Pos.	With	With			
N199187	4-2 Pos.	With		With		
N229482	4-2 Pos.	With			With	
N257184	4-2 Pos.	With				With
N209313	2-2 Pos. 2-3 Pos.	Without	With			
N207228	2-2 Pos. 2-3 Pos.	Without		With		
N253786	2-2 Pos. 2-3 Pos.	Without			With	
N262424	2-2 Pos. 2-3 Pos.	With	With			
N236956	2-2 Pos. 2-3 Pos.	With		With		
N191911	2-2 Pos. 2-3 Pos.	With			With	
N194433	2-2 Pos. 2-3 Pos.	With				With
N184035	4-3 Pos.	Without	With			
N190702	4-3 Pos.	Without			With	
N196648	4-3 Pos.	Without				With
N323769	4-3 Pos.	With	With			
N223613	4-3 Pos.	With				With

U-5 SWITCH CIRCUIT CONTROLLER FOR CLASSIFICATION YARDS

(With Two Wire Guide Plates — One With 2" Tapped Hole and One With 1-1/2" Tapped Hole.)

FOUR-WAY (4F-4B DEPENDENT CONTACTS)

PART NO.	CAM	RETURN SPRING	CRANK OFFSET (See p. 2)			
			3/4" Offset		2-13/32" Offset	
			Insulated Ball Stud	Non-Ins. Ball Stud	Insulated Ball Stud	Non-Ins. Ball Stud
N371946	3-3 Pos. 1-2 Pos.	Without	With			

U-5 SWITCH CIRCUIT CONTROLLER FOR STANDARD APPLICATION

(With Two Wire Guide Plates — One With 2" Tapped Hole and One With 1-1/2" Tapped Hole.)

SIX-WAY (6F-6B DEPENDENT CONTACTS)

PART NO.	CAM	RETURN SPRING	CRANK OFFSET (See p. 2)			
			3/4" Offset		2-13/32" Offset	
			Insulated Ball Stud	Non-Ins. Ball Stud	Insulated Ball Stud	Non-Ins. Ball Stud
N196130 N223614	6-2 Pos. 6-2 Pos.	Without With		With		With

U-5 SWITCH CIRCUIT CONTROLLER FOR CLASSIFICATION YARDS

(With Two Wire Guide Plates — One With 2" Tapped Hole and One With 1-1/2" Tapped Hole.)

SIX-WAY (6F-6B DEPENDENT CONTACTS)

PART NO.	CAM	RETURN SPRING	CRANK OFFSET (See p. 2)			
			3/4" Offset		2-13/32" Offset	
			Insulated Ball Stud	Non-Ins. Ball Stud	Insulated Ball Stud	Non-Ins. Ball Stud
N338576	3-3 Pos. 3-2 Pos.	Without	With			

CP SWITCH VALVE

The reliable, time-proven US&S CP Switch Valve is used in conjunction with mainline and transit electro-pneumatic switch machines. The switch valve, ruggedly constructed to provide years of maintenance-free service, is designed to control the compressed air to the operating cylinders of a switch machine.

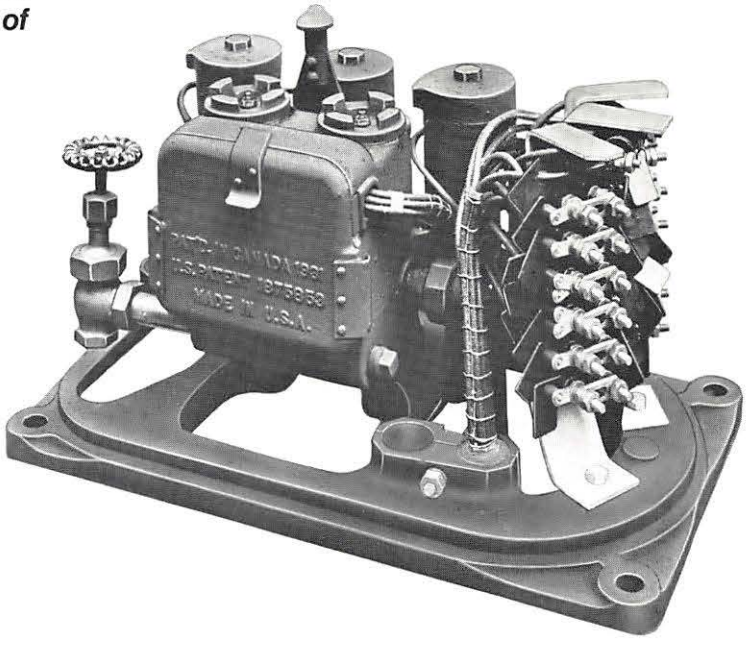

DESCRIPTION

The CP Switch Valve is an assembly consisting of: three electro-magnets, three pin valves, two pistons, two poppet valves, terminal board, and a circuit controller. These basic components as well as the piping, hoses, and fittings are mounted on a rectangular cast iron base equipped with a cover. The switch valve controls compressed air which operates the cylinders of an electro-pneumatic switch machine. One switch valve has the capability of operating two switch movements, if desired.

A standard switch valve contains dc type magnets which have two-piece caps with finger holes. DC magnets are available with 130 or 400 ohm coils.

MOUNTING

The switch valve can be easily installed on a concrete base or a cast iron foundation. Cast iron foundations are designed with accurately placed knockouts for trunking or parkway cables, and are molded to perfectly fit the switch valve base.

FEATURES

- Rugged construction for long life.
- Adaptable to various installations.
- Choice of magnets
- Meets applicable AAR requirements.

CP SWITCH VALVES

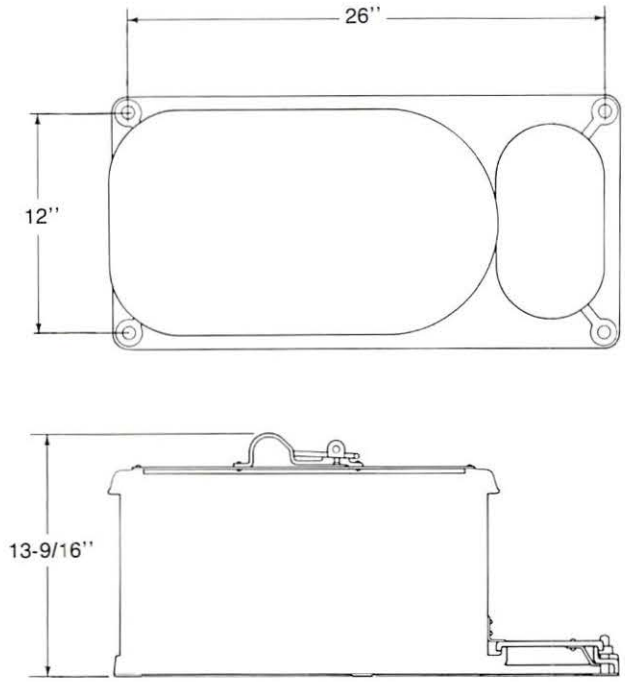

PART NO	DESCRIPTION
N109898	CP SWITCH VALVE, DC magnets, 130 ohms.
N109902	CP SWITCH VALVE, DC magnets, 400 ohms.

CAST IRON FOUNDATIONS

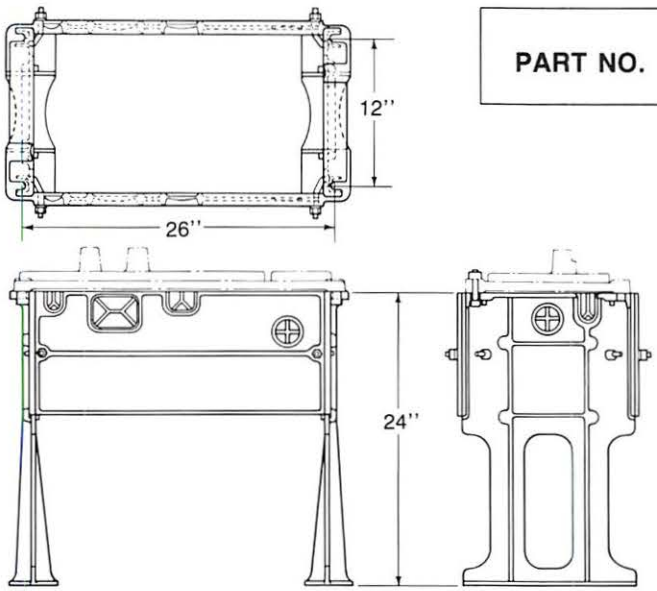

PART NO.	X161412-001

NOTE: For detail parts and additional information, refer to service manual SM5410.

SL-25 AND SL-26 ELECTRIC SWITCH LOCKS

The SL-25 and SL-26 Electric Switch Locks are low type electric locks for application to locking levers located between the rails at the middle of hand operated crossovers, where clearance requirements limit the height of the lock to 7 inches.

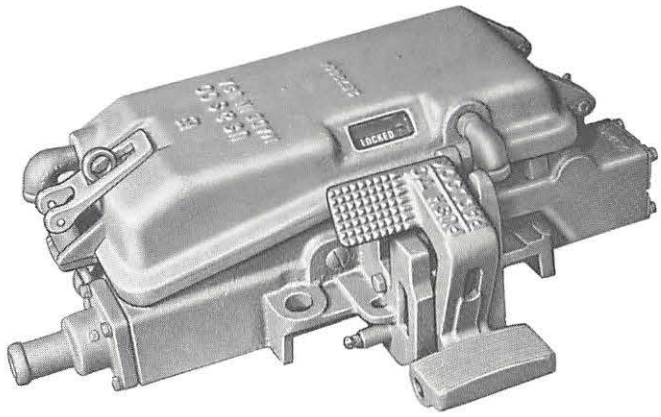

DESCRIPTION

The SL-25 and SL-26 Electric Switch Locks are lever locking devices which employ a foot-operated latch with padlock. Other components include; a magnet assembly, armature contacts, cam-operated controls, plunger rod and indicator.

OPERATION

The locking device is a magnetically operated arm, which interposes a lock dog in the path of a plunger, attached to the foot latch. The mechanical indicator displays "Padlocked" in the aperture of the shield when the foot-latch is fully depressed and the padlock is in place. When the padlock is removed it displays "Locked" for this intermediate position, and after the magnet coils are energized, the locking device is released and the indicator displays "Unlocked". The switch can then be thrown.

CAM OPERATED CONTACTS

The SL-25 has three cam-operated contacts (2 normally closed, 1 open) for line control. The SL-26 has 6 heavier duty contacts, open in the padlocked position, for direct track shunting in nonelectrified areas. Both locks indicate the position of the magnet armature.

PHYSICAL ARRANGEMENT

Overall dimensions of the switch lock are shown on the back page. These dimensions will be found useful for locating and/or applying a switch lock to a switch layout.

OPTIONAL EQUIPMENT

As an optional feature, the SL-25 and SL-26 Switch Locks may be ordered with an emergency key release unit, either the Yale Key or Switchman's Key types. When ordering, specify type desired. A latch-out feature is also available which places contacts in their most restrictive indication if an emergency key is used.

If a lock suitable for tandem application (locks in both normal and reverse position) is desired the order should so state.

FEATURES

- Mechanical indicator.
- Low profile — can be installed between rails.
- Single and tandem applications.
- Meets applicable AAR requirements.

UNION SWITCH & SIGNAL DIVISION
AMERICAN STANDARD INC. / SWISSVALE, PA 15218

PRINTED IN U.S.A.

RSE-3D5
2/83

SL-25 and SL-26 ELECTRIC SWITCH LOCKS

ORDERING INFORMATION

Order the SL-25 or SL-26 Electric Lock from the tabulation below. Order should specify the type of switch stand to which the lock is to be applied, and any options desired.

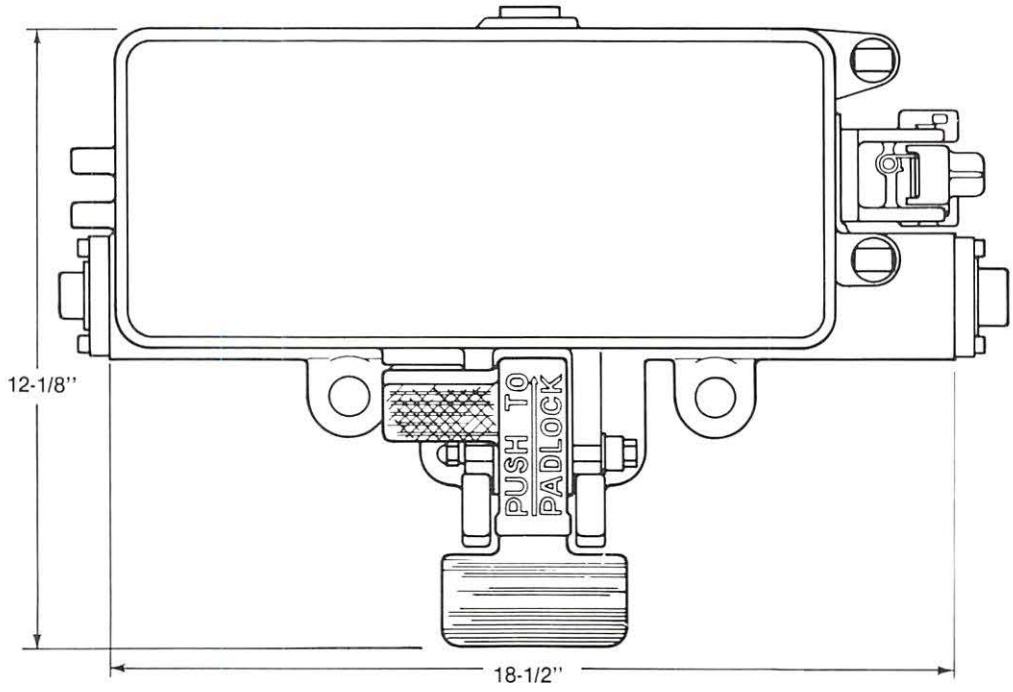

PART NO.	DESCRIPTION
N269804	SL-25 ELECTRIC SWITCH LOCK, for single or tandem application, 280 ohm magnet coil, normal contact arrangement and without key release.
N260400	SL-26 ELECTRIC SWITCH LOCK, for single or tandem application, 440 ohm magnet coil, normal contact arrangement, 1-1/2" box adapter for waterproof cable outlet, and without key release.

NOTE: For detail parts and additional information, refer to service manual SM5466.

AIR COMPRESSOR UNITS

US&S Air Compressor Units are designed to provide pneumatic power for switch machines, car retarders, and other pneumatic railway equipment. The air compressors are housed in a protective enclosure, complete for installation, with or without external air receiver tank. Each air compressor unit provides either 3.8 or 7.6 CFM air supply, adjustable to 85 PSI.

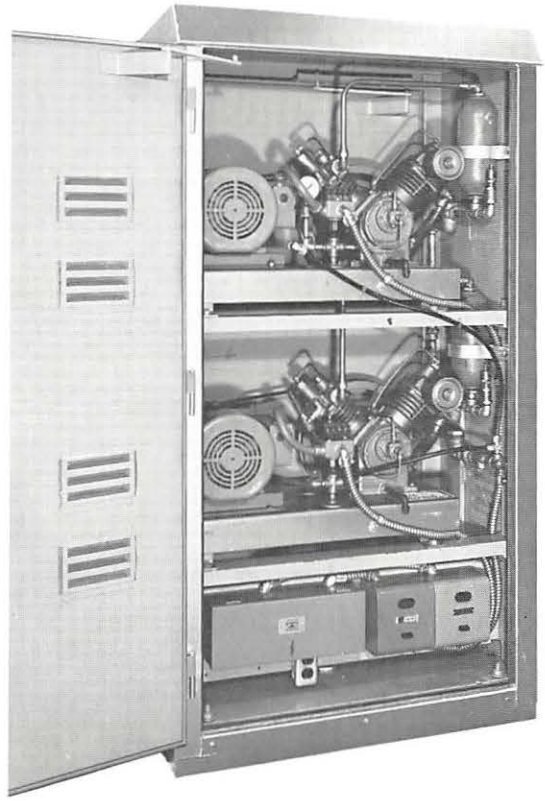

DESCRIPTION

The standard unit consists of two belt-driven reciprocating air compressors housed in a weather resistant steel equipment case, complete with all piping, pressure switches, wiring, controls, and safety valves.

The electric drive motor and compressor are mounted on a common bed plate. The drive motor is rated at 1 or 2 hp, depending on compressor output, and operates on 220vac 60Hz power.

The air compressor is an air-cooled, piston type, belt-driven unit. A counterbalanced crankshaft and matched automotive type pistons provide smooth running. Simple, precision finished disc type values are provided for airtight sealing. Pressure lubrication is provided by a positive displacement rotary oil pump.

Separate cylinders and valve housing are individually detachable for ease of maintenance. Each unit features a safety relief valve to prevent overpressure conditions.

OPERATION

The dual compressors are arranged so that the compressors operate simultaneously. A time delay is provided to delay starting the motor of compressor 2 until the motor of compressor 1 has achieved normal speed. A magnetic starter is provided for the control of each motor. Each starter is equipped with thermal overload protection for the motor it controls. When the overload relay has operated, it will automatically reset after cooling.

The magnetic starter is equipped with a manually operated selector switch which will give individual manual control of each compressor. This switch has three positions: HAND, OFF, AUTOMATIC. It should normally be in the AUTOMATIC position. Either may be in the OFF position to allow only one

(Continued on page 2)

FEATURES/BENEFITS

- Rugged construction.
- Minimum maintenance.
- Versatile — designed for easy installation of second unit in parallel, if desired.
- Automatic or manual operation.
- Completely self-contained — safety valve and pressure switch provided.
- Long life — pressure lubrication.
- Complete with case designed for foundation mounting.

compressor to run at a time. If the magnetic starter for unit 1 is in the OFF position, there will still be a short time delay each time the motor for unit 2 cuts in. With the selector switch in the HAND position, the pressure switches are not effective to de-energize the motors.

Two pressure switches P1 and P2 are provided (see schematic piping diagram following). In operation, with selector switches in the AUTOMATIC mode, pressure switch P1 is normally set to cut-in at 65 pounds and cut-out at 80 pounds. This pressure switch controls both compressors. Pressure switch P2 is normally set to cut-in at 55 pounds and cut-out at 70 pounds. It is used primarily to indicate low pressure; but is so connected as to apply power to the control circuit of compressor 2 motor if, for any reason, the contact of pressure switch P1 should fail to close.

The safety valve is set to operate between 90 and 95 pounds per square inch.

MOUNTING

A typical foundation for the case is shown below. This plan shows bolting dimensions for the case, and also includes requirements for the air receiver.

AIR RECEIVER

An air receiver is available for use with the air compressor unit. The air receiver comes complete with all piping for direct connection to the compressor unit. (See Ordering Information.)

An alcohol injector system, when used, provides a metered amount of alcohol to each cubic foot of air delivered, thus preventing freezing of lines. It also permits removal of condensed water vapor from the system.

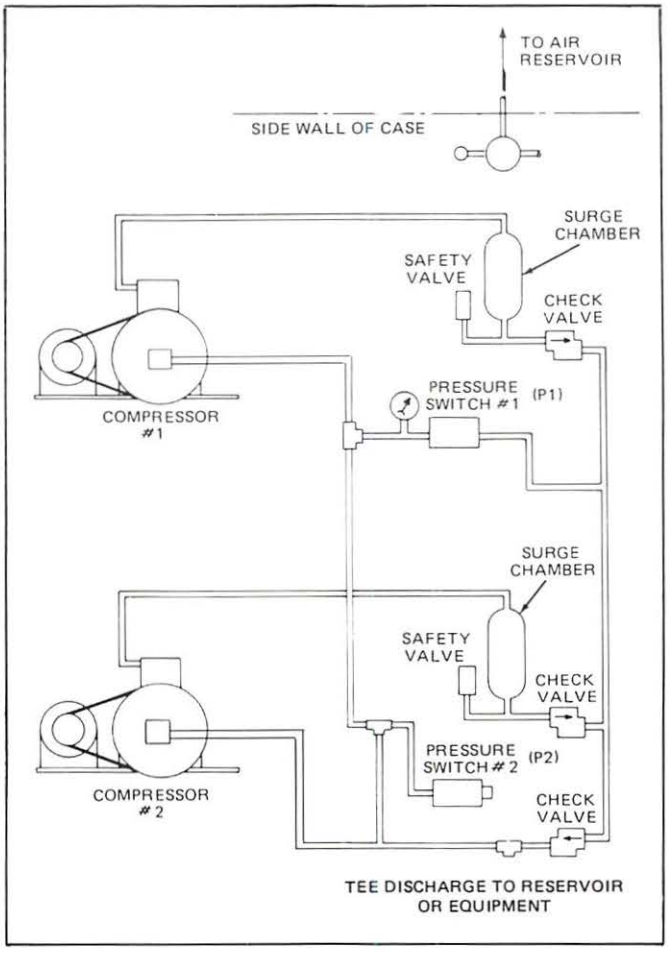

AIR COMPRESSOR SCHEMATIC PIPING DIAGRAM

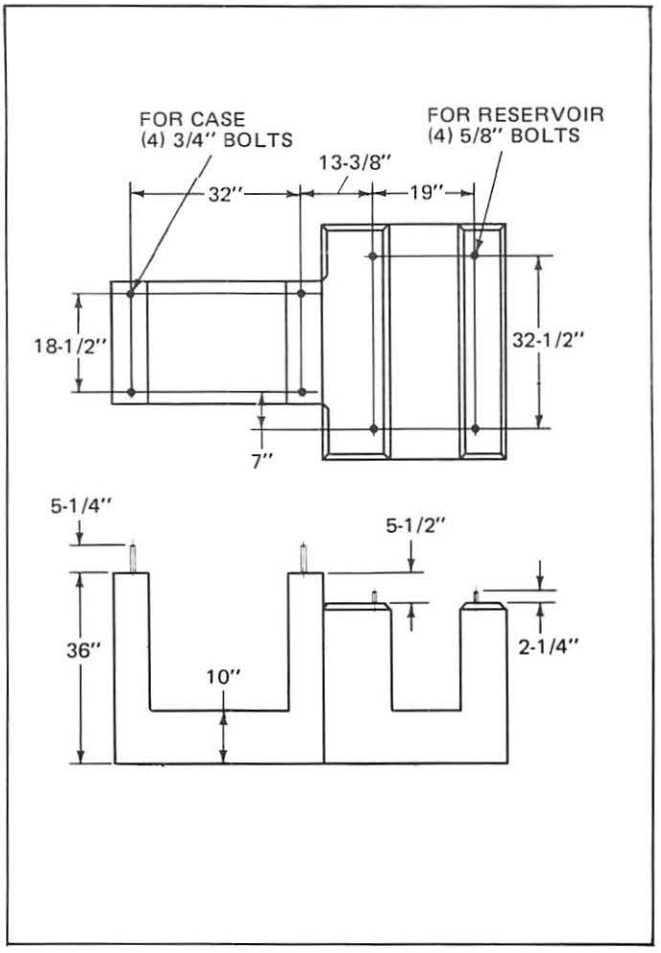

FOUNDATION MOUNTING DIMENSIONS

AIR COMPRESSOR UNITS

ORDERING INFORMATION

Determine your air requirement, 3.8 cfm or 7.6 cfm and order Air Compressor Unit by part number, description, and compressor rating from below.

If an air receiver is required, this must be ordered in addition to the compressor unit. Order by part number and description.

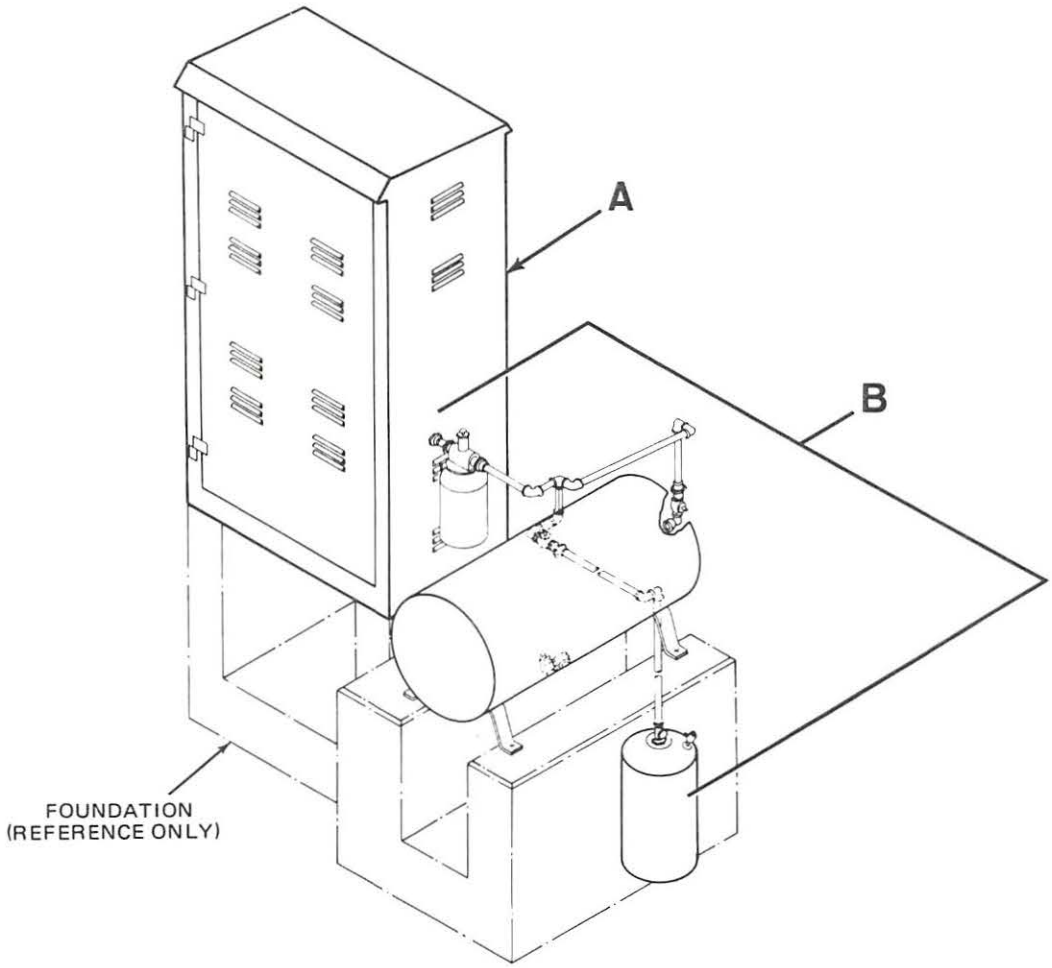

REF.	PART NO.	DESCRIPTION
A	**J703358**	AIR COMPRESSOR UNIT, with two 3.8 cfm compressors in case, complete, 80 PSI max. (220 V, 60 Hz, 1 HP)
	J703359	AIR COMPRESSOR UNIT, with two 7.6 cfm compressors in case, complete, 80 PSI max. (220 V, 60 Hz, 2 HP)
B	**X327455**	AIR RECEIVER and ALCOHOL INJECTOR for two 7.6 cfm compressors complete with all piping for case.

NOTE: For higher psi outputs consults your US&S representative.

For detail parts and additional information, refer to service manual SM5431.

OPERATING RODS FOR SWITCH CIRCUIT CONTROLLERS

Operating Rods with Spring Type Ball Socket Connections are used with switch circuit controllers. A variety of rod and socket assemblies are available for use in new installations, or for replacement purposes. The fittings are of rugged construction to assure long, trouble-free use with a minimum of maintenance.

These switch controller operating rods are used to connect a switch controller directly to a switch point. Connections can be made to a near switch point, or a far switch point as illustrated below.

DESCRIPTION

Operating Rods are available in two types: (1) equipped with spring-type ball socket for the circuit controller connection and a ball clamp for the switch point connection, (2) equipped with spring-type ball socket for both connections.

The ball sockets are self adjusting. Lost motion in the connections is automatically taken up by the spring which is of ample tension and strength to adequately operate the circuit controller. The design is such that the ball connection is captive and cannot escape from the socket even if the rugged spring should break. A grease fitting on the Spring-Type Ball Socket Connection provides for force lubrication.

The rods use a thread with rounded roots to provide an assembly which will give long trouble-free life under severe vibration conditions encountered in service.

ORDERING INFORMATION

Determine application of rod, i.e., connections to near switch point or far switch point. Also determine if spring-type ball socket is required on both ends of the rod, or on one end only. Consult the tabulation for Operating Rods.

Ball type point detector lugs are recommended for use with these rods. If required, consult specific ordering information for Point Detector Lugs on page 3.

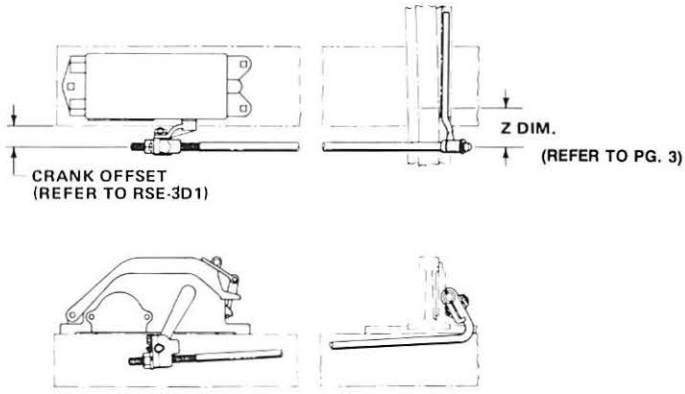

APPLICATION OF SWITCH CIRCUIT CONTROLLER TO NEAR SWITCH POINT.

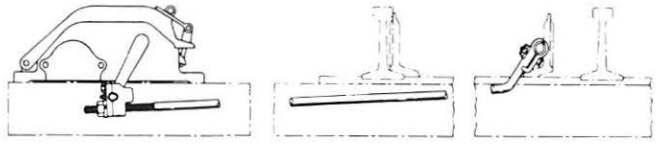

APPLICATION OF SWITCH CIRCUIT CONTROLLER TO FAR SWITCH POINT.

OPERATING RODS

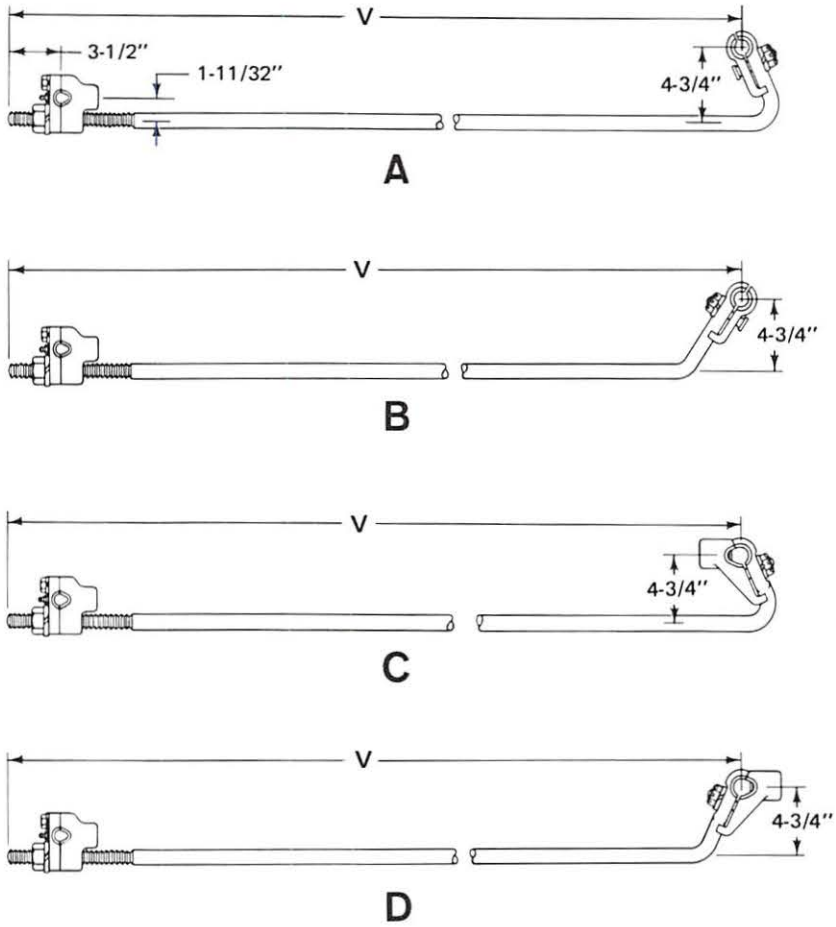

REF.	V DIM.
A	2' 3-1/4"
A1	2' 9-1/2"
A2	3' 10-1/2"
B	7' 11-1/2"
C	3' 10-1/2"
D	7' 11-1/2"

Order by Part Number & Description Shown in Caps

REF.	PART NO.	DESCRIPTION
A	N237118	SWITCH CIRCUIT CONTROLLER OPERATING ROD, With spring type ball socket at one end and ball clamp at other end
A1	N221255	SWITCH CIRCUIT CONTROLLER OPERATING ROD, With spring type ball socket at one end and ball clamp at other end
A2	N224218	SWITCH CIRCUIT CONTROLLER OPERATING ROD, With spring type ball socket at one end and ball clamp at other end
B	N225193	SWITCH CIRCUIT CONTROLLER OPERATING ROD, With spring type ball socket at one end and ball clamp at other end
C	N224456	SWITCH CIRCUIT CONTROLLER OPERATING ROD, With spring type ball socket connections at each end.
D	N238537	SWITCH CIRCUIT CONTROLLER OPERATING ROD, With spring type ball socket connections at each end.

POINT DETECTOR LUGS

ORDERING INFORMATION

When ordering point detector lugs, refer to the application drawings on page 2 and determine the Z dimension. Refer to the dimension chart below and find the REF. item that corresponds to that dimension. (The bolt holes are slotted, so there is some allowance for play.) Order by part number for the specific REF. item, providing description, including bolt size.

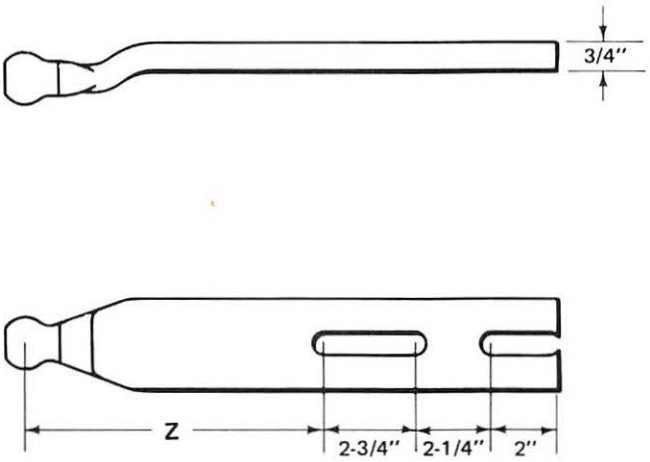

REF.	Z DIM.
A	5"
A1	7"
A2	9"
A3	5"
A4	7"
A5	9"

REF.	PART NO.	DESCRIPTION
A	M346588	POINT DETECTOR LUG, 3/4" BOLTS
A1	M346589	POINT DETECTOR LUG, 3/4" BOLTS
A2	M346590	POINT DETECTOR LUG, 3/4" BOLTS
A3	M346591	POINT DETECTOR LUG, 1" BOLTS
A4	M346592	POINT DETECTOR LUG, 1" BOLTS
A5	M346593	POINT DETECTOR LUG, 1" BOLTS

UNION SWITCH & SIGNAL DIVISION
AMERICAN STANDARD INC. / SWISSVALE, PA 15218

RUBBER MOUNTED OPERATING RODS FOR SWITCH CIRCUIT CONTROLLERS

US&S's rubber mounted operating rods are designed to provide long trouble-free service. The life expectancy of this type of rod is much longer than comparable rods without the rubber mounts. Much of the wear from friction, caused by vibration of passing trains, is eliminated when rubber mounted operating rods are used.

DESCRIPTION

Operating rods are available in two types: for near switch point application, and far switch point application. An offset type rod is also available for use in special applications. This rod is for installing on the near switch point.

The rod end connected to the circuit controller is equipped with either a spring type ball socket or ball clamp. The spring type ball socket is designed so that the ball connection is captive and cannot escape from the socket, even if the rugged spring should break. A grease fitting on the spring type ball socket connection provides for forced lubrication. The threaded end uses a thread with rounded roots to provide an assembly which will give long trouble-free service under the severe vibration conditions encountered.

A rubber insert is provided at the point detector end for mounting the point detector lug. This rubber-to-rubber installation provides the long service feature of these rods.

The Point Detector Lugs have an open slotted end. They're made from forged steel and are attached to the rod by the hardware shown and listed under "Ordering References".

APPLICATION

These switch circuit controller operating rods are used to connect a switch circuit controller directly to a switch point.

APPLICATION DIAGRAM

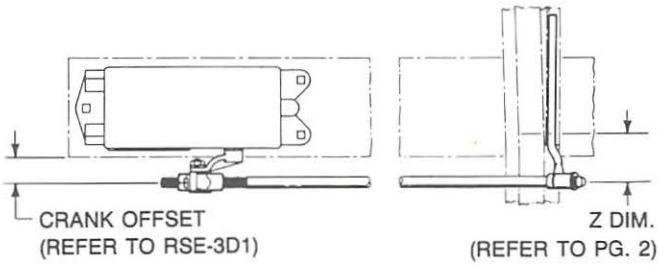

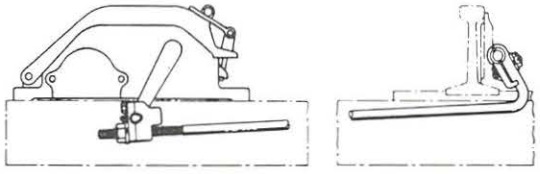

Application of switch circuit controller to near switch point

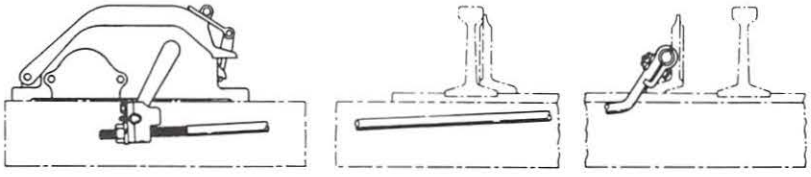

Application of switch circuit controller to far switch point

PRINTED IN U.S.A.

RUBBER MOUNTED OPERATING RODS FOR SWITCH CIRCUIT CONTROLLER

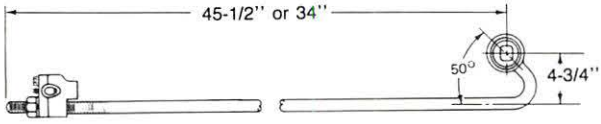

PART NO.	DESCRIPTION
N321508	Near Switch Point Operating Rod
N435244	Near Switch Point Operating Rod

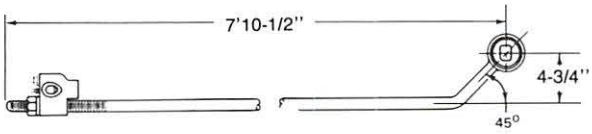

PART NO.	DESCRIPTION
N376403	Far Switch Point Operting Rod

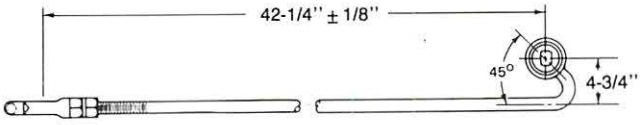

PART NO.	DESCRIPTION
N375670	Near Switch Point Operating Rod

POINT DETECTOR LUGS

When ordering point detector lugs, refer to the application drawings on page 1 and determine the Z dimension. Refer to the dimension chart below and find the REF. item that corresponds to that dimension. The bolt hole is slotted and it has an open slotted end, so there is some allowance for play. Order by part number for the specific REF. item, providing description, including bolt size.

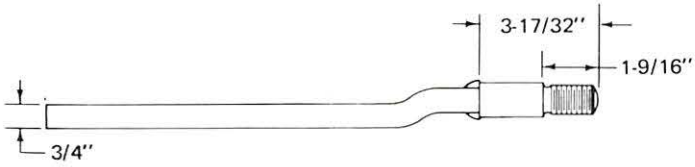

REF	DIMENSIONS (INCHES) X	Y	Z
A	1-15/32	27/32	7-7/8
A1	1-15/32	63/64	7-7/8
A2	1-15/32	27/32	6-3/4

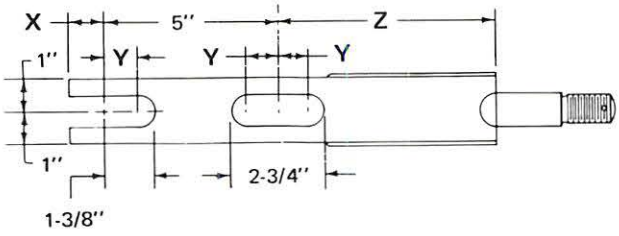

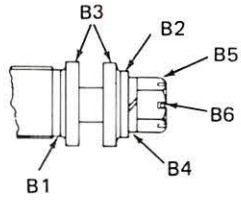

PART NO.	DESCRIPTION	REF.
N434215	Point Detector Lug, 1" bolts	A
N434217	Point Detector Lug, 3/4"bolts	A1
N435246	Point Detector Lug, 1" bolts	A2
		See Table above for dimensions

PART NO.	DESCRIPTION	REF.
M296971	Flat Washer	B1
M296977	Flat Washer	B2
J047927	Rubber Bushing	B3
J047547	Spring Washer	B4
J048136	Sl. Hx. Nut, 7/8-9	B5
J486000	Cotter Pin, 5/32"x1-3/4"	B6

ROLLER BEARING ASSEMBLY FOR SWITCHES

US&S's Roller Bearing Assembly for switches is a simple, inexpensive anti-friction device designed to reduce friction in switches.

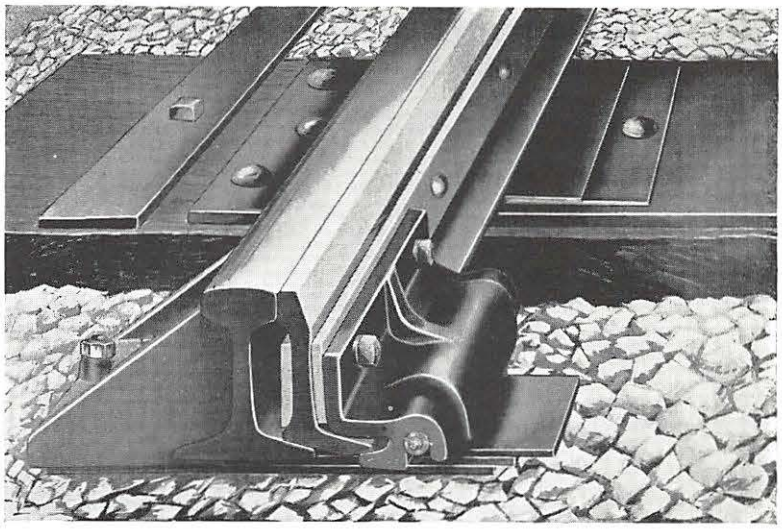

These roller bearings, when used, will reduce the switch load by providing for support of approximately 80% of the switch weight of the switch on the roller bearings, while in transit. However, when a train travels over a switch equipped with these bearings, the switch is supported by tie plates in the usual manner.

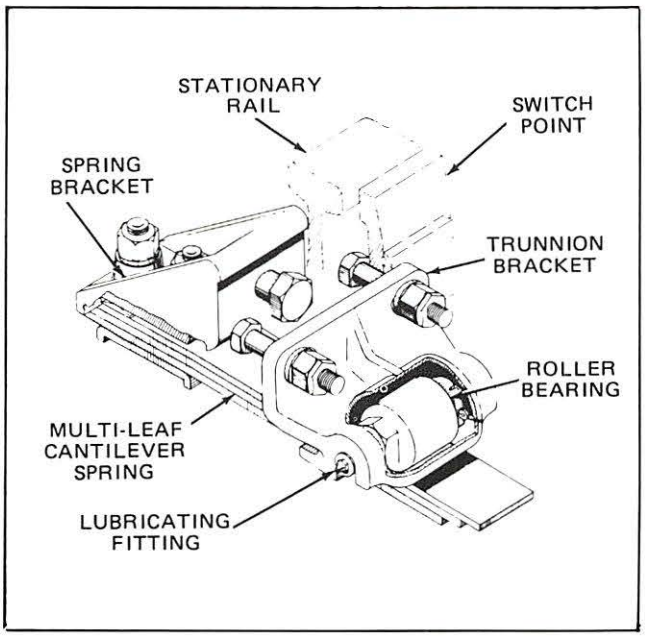

By using Roller Bearing Assemblies with switches, power required for switch operation is reduced. In addition, uniform rather than varied power requirements are made possible by reducing the sliding weight on grit covered tie plates.

FEATURES

- Rugged construction assures long service life.
- Lubricating fitting provides for fast and easy lubrication of bearing.
- Available for several rail sizes.
- Reduced power for switch operation extends switch machine life.

UNION SWITCH & SIGNAL DIVISION
AMERICAN STANDARD INC. / SWISSVALE, PA 15218

RSE-3E3
4/76

PRINTED IN U.S.A.

These roller bearings can be used on mechanically operated switches, switch springs with mechanical facing point lock, and outlying power operated switches. Roller Bearing Assemblies are available for use with a number of different rail sizes.

DESCRIPTION

Roller Bearing Assemblies are available for different rail sizes and are designed for a minimum of maintenance and requires little care except for occasional lubrication.

The Roller Bearing Assembly consists basically of a pre-drilled trunnion mounting bracket with roller and pre-drilled spring bracket with multi-leaf cantilever spring. The spring bracket is bolted to the stationary rail and engages with the roller bearing which is mounted in the trunnion bracket bolted to the switch point rail.

The brackets are made of malleable iron for rugged use and long life. Lubrication is accomplished through a fitting located on the roller shaft.

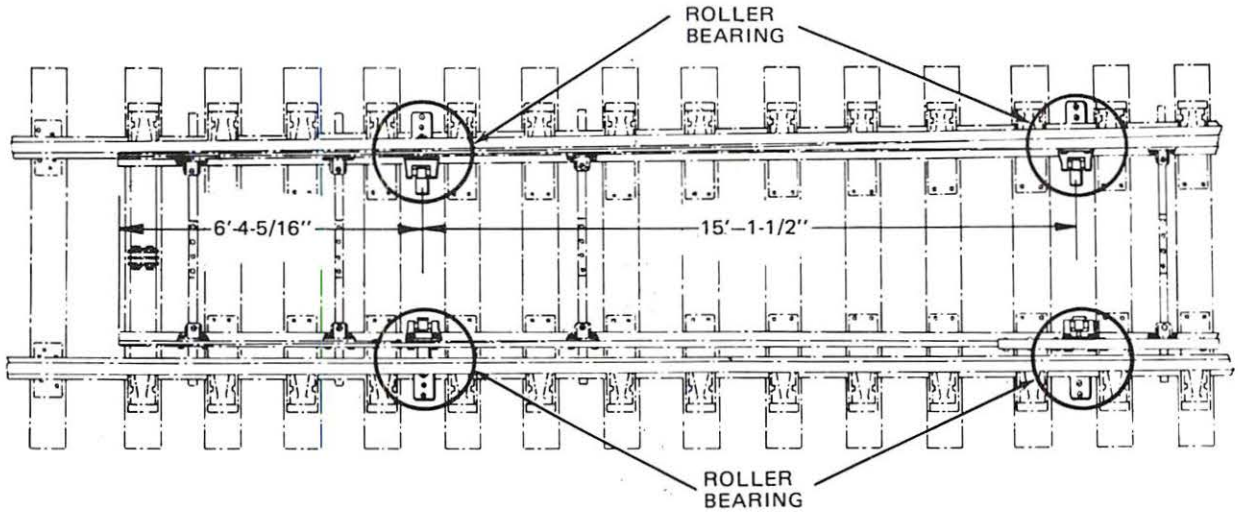

NOTE: For installation and maintenance, see Service Manual 5407.

ROLLER BEARING ASSEMBLY ORDERING INFORMATION Order by Part Number and Rail Size. Specify quantity required.	
PART NO.	**RAIL SIZE**
X243375	100# R.E., 100# R.A., 105# Dudley, and 110# R.E. RAILS, suitable for 3/8" or 1-1/4" reinforcing bar on gage side.
X231923-001	112# R.E., 112# H.F., 115# R.E., 119# C.F. & I., 127# Dudley, 129# T.R., 130# R.E., 130# H.F., 131# R.E., 132# R.E., 132# H.F., 133# R.E., 136# C.F. & I., and 140# P.S. RAILS, suitable for 1/2" to 1-1/4" reinforcing bar on gage side.

SWIVEL FRONT RODS AND SWIVEL POINT LUGS FOR SWITCHES

The Swivel Front Rod comprises a front bar and two switch point lugs. The front bar is turned up at each end for attachment to the point lugs by tee bolts. The point lugs are curved to fit the tee bolt head serving as a vertical pivot pin, and the engaging faces of the front bar ends are, likewise, curved to fit the point lugs. The hole for the tee bolt in each end of the front bar is a relatively close fit, while the corresponding point lug hole is slotted, thus allowing a swivel action in the horizontal plane at each end while, at the same time, providing the rigidity in the vertical plane desired for support of the switch point.

The front bar is insulated at the lock rod connection lug. Its length is adjustable in 1/8 inch steps in a wide range to accommodate the various thicknesses of reinforcing bars and the various switch point openings ordinarily encountered.

The Swivel Front Rods, of high strength steel construction, are available with swivel point lugs and are adjustable to suit various lengths. They may be utilized in switch layouts having a distance between inside faces of point reinforcing bars of from 4 feet 3-1/2 inches maximum to 3 feet 11-1/8 inches minimum.

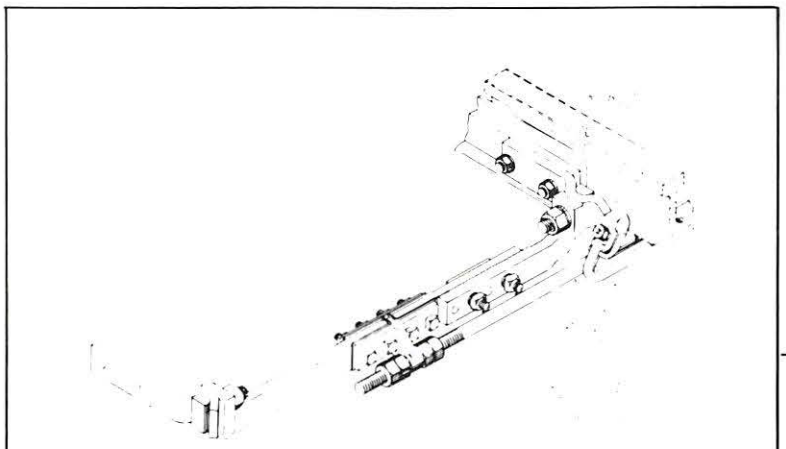

DETAIL OF SWIVEL ROD AND LUGS

FEATURES:

- Rugged steel contruction — long life.
- Unique swivel design — eliminates breakage-causing strain.
- Versatile — adjustable length.
- May be used in right- or left-hand configurations.

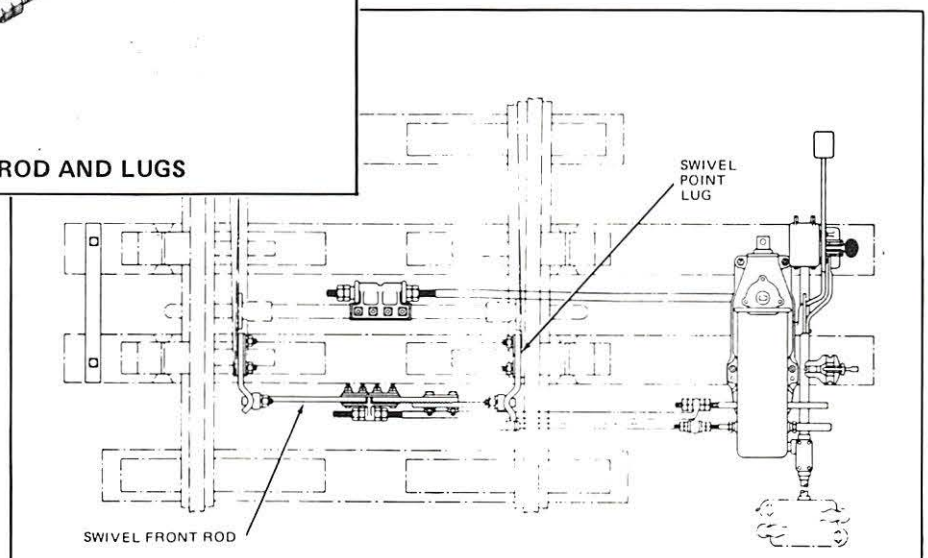

TYPICAL APPLICATION OF SWIVEL FRONT RODS AND SWIVEL POINT LUGS

SWIVEL FRONT RODS

U S & S Swivel Front Rods are designed as rugged, long life alternatives to conventional rigid connection front rods. While providing a connection of great strength between switch points, the unique swivel design permits the horizontal movement necessary to limit strain or prevent breakage of the connection resulting from stagger in switch point position.

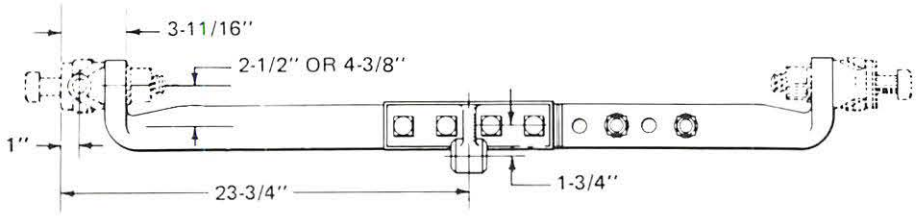

PART NO.	DESCRIPTION
229002	Swivel Front Rod with 2-1/2" Downset
303520	Swivel Front Rod with 4-3/8" Downset

SWIVEL POINT LUGS

Swivel Point Lugs link the Swivel Front Rod to the switch track and are actuated by a connecting rod. Two types are available. One is supplied with a ball tip for mating with a point detector connecting rod. The other is furnished with a plain end.

The lugs are symmetrical about the switch point bolt holes and therefore may be interchanged. As the lock rod connection may be run to either side from the bracket lug, the same front rod parts are used at right-hand and left-hand layouts.

SWIVEL POINT LUG WITH BALL END

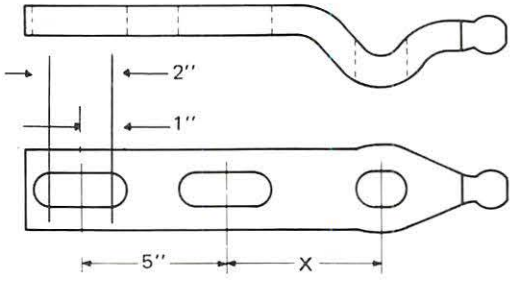

SWIVEL POINT LUG WITHOUT BALL END

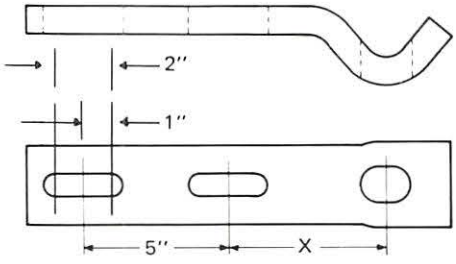

FOR USE WITH 1" BOLTS		FOR USE WITH 3/4" BOLTS		FOR USE WITH 3/4" BOLTS		FOR USE WITH 1" BOLTS	
PART NO.	DIMENSION X	PART NO.	DIMENSION X	PART NO.	DIMENSION X	PART NO.	DIMENSION X
286016	4-1/2"	309848	4-3/4"	257125	5-1/2"	286840	4-1/2"
297146	5-1/2"	257124	5-1/2"	280484	4-3/4"	283081	5-1/2"
293573	6-3/8"	373959	6-3/4"	284293	6-3/4"	284294	6-3/8"

STEEL POINT BOLTS

Steel Point Bolts Are Machined From Heat Treated Steel For Long Life And Reliability.

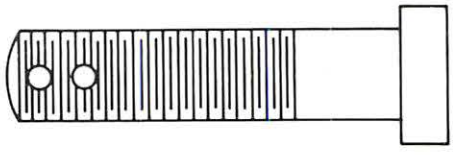

PART NO.	DESCRIPTION
M304192	3/4" x 5-1/4" Steel Point Bolt
M304193	3/4" x 4-1/4" Steel Point Bolt
M312567	1" x 4-3/4" Steel Point Bolt
M393550	1" x 5-1/2" Steel Point Bolt

POINT DETECTOR BARS AND LOCK RODS
FOR M-3, M-23A, AND M-23B SWITCH MACHINES

US&S offers a full line of rugged point detector bars and lock rods with connecting rods for use with M-3/M-23A/M-23B Switch Machines.

POINT DETECTOR BARS

Point Detector Bars are constructed of rugged, high-strength steel, available in two configurations, each designed to suit a particular companion point detector connecting rod. Each point detector connecting rod is equipped with a standard clamp designed for mating with a ball end type point detector lug or stud.

POINT DETECTOR BARS

A

PART NO.	DESCRIPTION
N284475	POINT DETECTOR BAR for M-3, M-23A and M-23B switch machines.

B

PART NO.	DESCRIPTION
N285907	POINT DETECTOR BAR for M-3, M-23A, and M-23B switch machines.

CONNECTING RODS

References below are typical for use with machines 45" from gage. Rods to other lengths and sets are available.

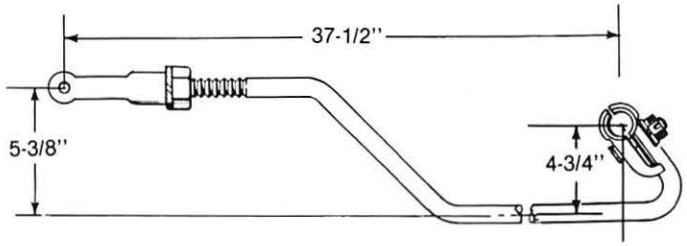

PART NO.	DESCRIPTION
N298719	POINT DETECTOR CONNECTING ROD for use with Point Detector Bar, Ref. A.

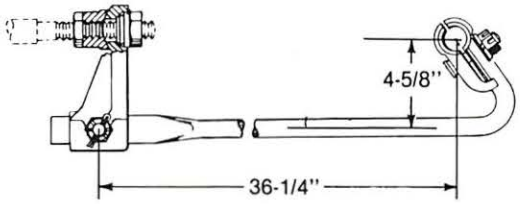

PART NO.	DESCRIPTION
N296653	POINT DETECTOR CONNECTING ROD for use with Point Detector Bar, Ref. B.

LOCK RODS

Lock Rods are available in two configurations, each constructed of sturdy steel, and designed to provide long, trouble-free service. Each lock rod is equipped with adjustable notch spacing to insure compatibility with virtually any switch machine installation.

Lock rod connecting rod lengths are for a nominal dimension of 45" from gage to center of machine. Lock rod connecting rods for distances from gage other than 45" are available. For information, consult your nearest US&S representative.

C

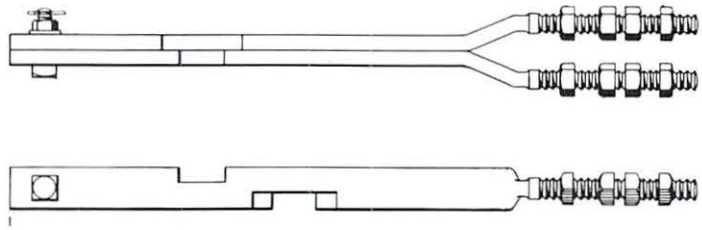

PART NO.	DESCRIPTION
N149866	LOCK ROD for use with M-3, M-23A and M-23B switch machines.

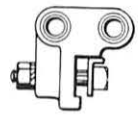

PART NO.	DESCRIPTION
N123471	LUG, for use with Part No. N149866, Ref. C.

D

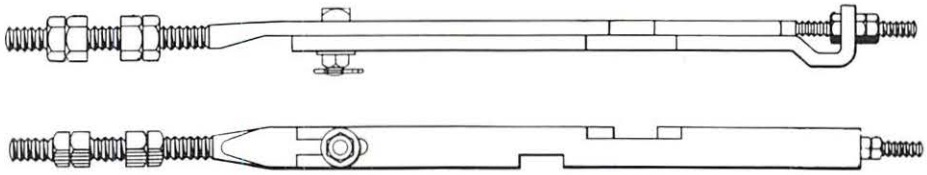

PART NO.	DESCRIPTION
N258643	LOCK ROD, for use with M-3, and M-23B switch machines.

LOCK ROD CONNECTING RODS

References below are typical for use with machines 45" from gage. Rods to other lengths and sets are available.

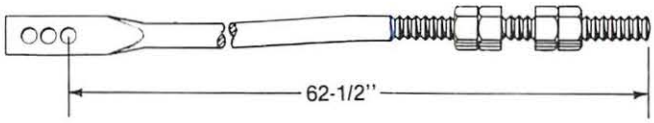

PART NO.	DESCRIPTION
N332195	LOCK ROD CONNECTING ROD for use with Part No. N1498666, Ref. C.

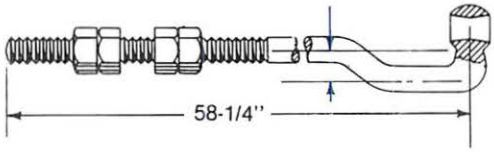

PART NO.	DESCRIPTION
N258686	LOCK ROD CONNECTING ROD for use with Part No. N258643, Ref. D.

RELAYS, PLUG-IN

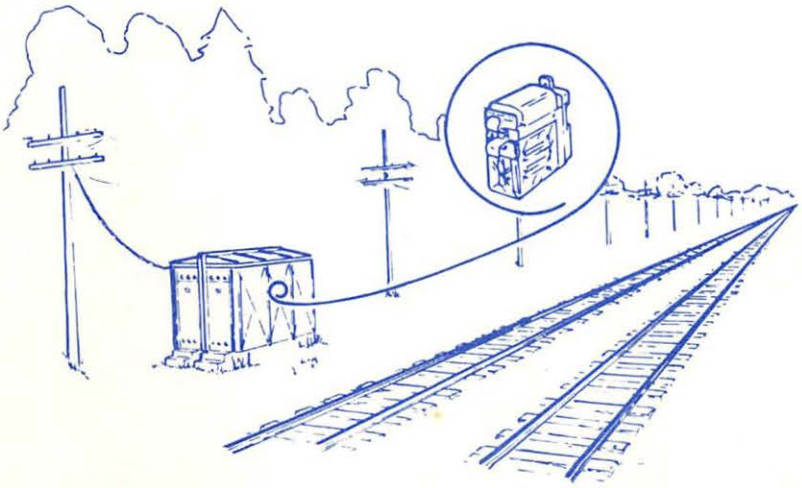

RSE-4

RELAYS, PLUG-IN

GENERAL

General Information for Plug-In Relays RSE-4

VITAL PLUG-IN DC LINE RELAYS

Biased RSE-4A1
Neutral RSE-4A2
Slow Dropaway and/or Pickup RSE-4A3
Magnetic Stick RSE-4A4
Magnetic Blowout RSE-4A5

VITAL PLUG-IN DC TRACK RELAYS

Biased-Ordinary-High Dropaway RSE-4B1

VITAL PLUG-IN TRACK, LINE AND POWER RELAYS

Two Element AC Vane RSE-4C1

VITAL PLUG-IN SWITCH CONTROL RELAYS

DC Type RSE-4D1
AC Type RSE-4D2

VITAL PLUG-IN CODE RELAYS

Code Generating RSE-4E1
Decoding RSE-4E2
Code Following RSE-4E3

PLUG-IN CONTROL RELAYS

Flasher RSE-4F1
Time Element (Thermal) RSE-4F2
Light Out RSE-4F3
Power Off RSE-4F4
Time Element (Mechanical) RSE-4F5
Time Element (Electronic) RSE-4F6

RELAY MOUNTING BASES RSE-4G1

CAB SIGNAL RELAYS (See Catalog Section RSE-15)

C88 -2398

UNION SWITCH & SIGNAL

645 Russell Street
Batesburg, SC 29006

SERVICE MANUAL 6498

PN-150EVT VITAL TIMER RELAY

-N40101001
-N40102501

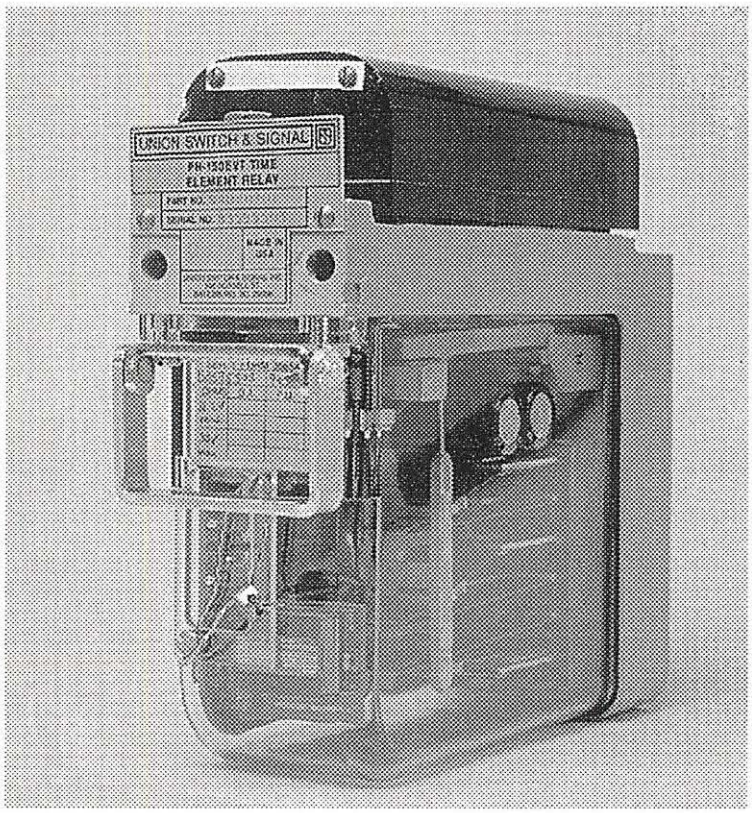

Installation ■

Operation ■

January 1996 Version 1.1

An ANSALDO Affiliated Company

COPYRIGHT 1995, UNION SWITCH & SIGNAL INC.
PRINTED IN USA

I.	**INTRODUCTION**	**1-1**
1.1	INTRODUCTION	1-3
1.2	BACKGROUND	1-3
1.3	SPECIFICATIONS	1-4
1.4	FEATURES OF OPERATION	1-5
1.4.1	Time Base (Clock)	1-5
1.4.2	Display and Toggle Switches	1-5
1.4.3	Power Sources	1-5
1.5	CONTACT ARRANGEMENTS	1-6
1.5.1	Contact Arrangement for PT-55 Replacement Version	1-6
1.5.2	Contact Arrangement for PN-150EVT Version	1-7
II.	**SHOP TESTING & ADJUSTMENTS**	**2-1**
2.1	TESTING SETUP	2-1
2.2	TESTING PROCEDURES	2-2
2.3	ADJUSTMENT OF CONTACT SPRINGS	2-2
2.3.1	Adjustment Procedure	2-2
2.3.2	Calibration	2-5
2.3.3	Check of Contact Openings	2-5
2.3.4	Permanent Magnet Hold-Down Force	2-6
III.	**INSTALLATION**	**3-1**
3.1	GENERAL INSTALLATION INFORMATION	3-1
3.2	PT-55 REPLACEMENT INSTALLATION	3-1
3.3	PN-150EVT INSTALLATION	3-1
3.4	PN-150T REPLACEMENT	3-2
3.5	RELAY INDEXING	3-2
3.6	RECEPTACLE CONTACT SPRINGS	3-3
3.7	INSTALLING WIRES IN RECEPTACLE SPRINGS	3-4
IV.	**PROGRAMMING THE PICK-UP DELAY TIME**	**4-1**
4.1	PROGRAMMING THE PICK-UP DELAY TIME	4-1
4.2	TESTING THE PICK-UP DELAY TIME	4-4
4.3	TROUBLESHOOTING	4-4

Appendix A Parts Lists

A.1 PARTS LIST (PN-150EVT PT-55 REPLACEMENT VERSION).....A-1
A.2 PARTS LIST (PN-150EVT TIME ELEMENT RELAY).....A-3
A.3 PARTS LIST (PN-150EVT MOUNTING KIT).....A-6

LIST OF ILLUSTRATIONS

Figure 1-1 PN-150EVT Relay and Mounting Kit (Photograph).....1-1
Figure 1-2 PT-55 Replacement Package (Photograph).....1-2
Figure 1-3 Timer Block Diagram.....1-5
Figure 1-4 Contact Arrangement for PT-55 Replacement.....1-6
Figure 1-5 Contact Arrangement for PN-150EVT Version.....1-7
Figure 2-1 Time Delay Test Set-Ups.....2-1
Figure A-1 PN150EVT (PT-55 Replacement Version).....A-2
Figure A-2 PN150EVT Time Element Relay.....A-4/5
Figure A-3 PN-150EVT Mounting Kit.....A-7

Primary Parts for PN-150EVT New Installation (N40102501)

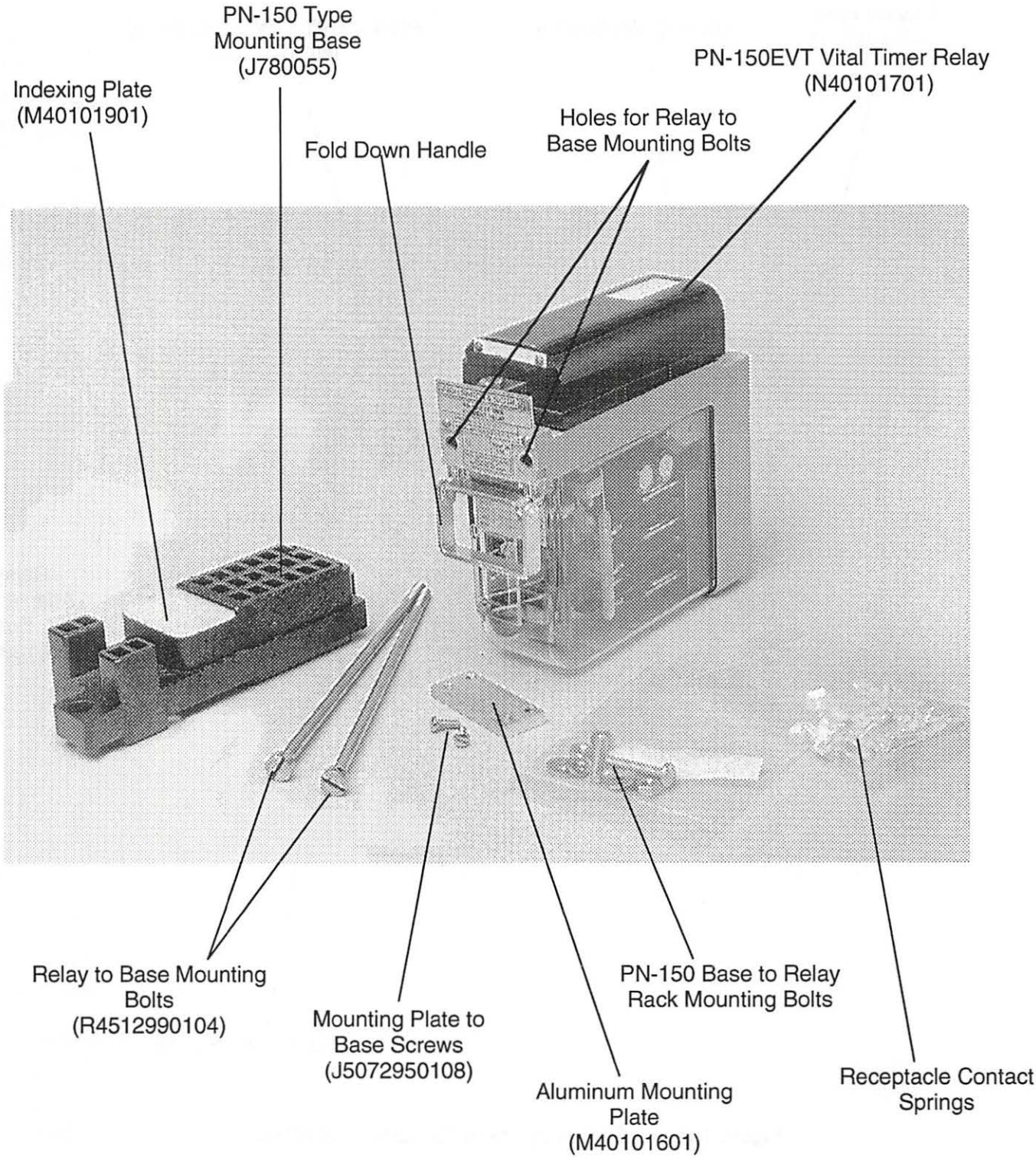

Figure 1-1. PN-150EVT Vital Timer Relay and Mounting Kit (N40102501)

Primary Parts for PT-55 Replacement (N40101001)

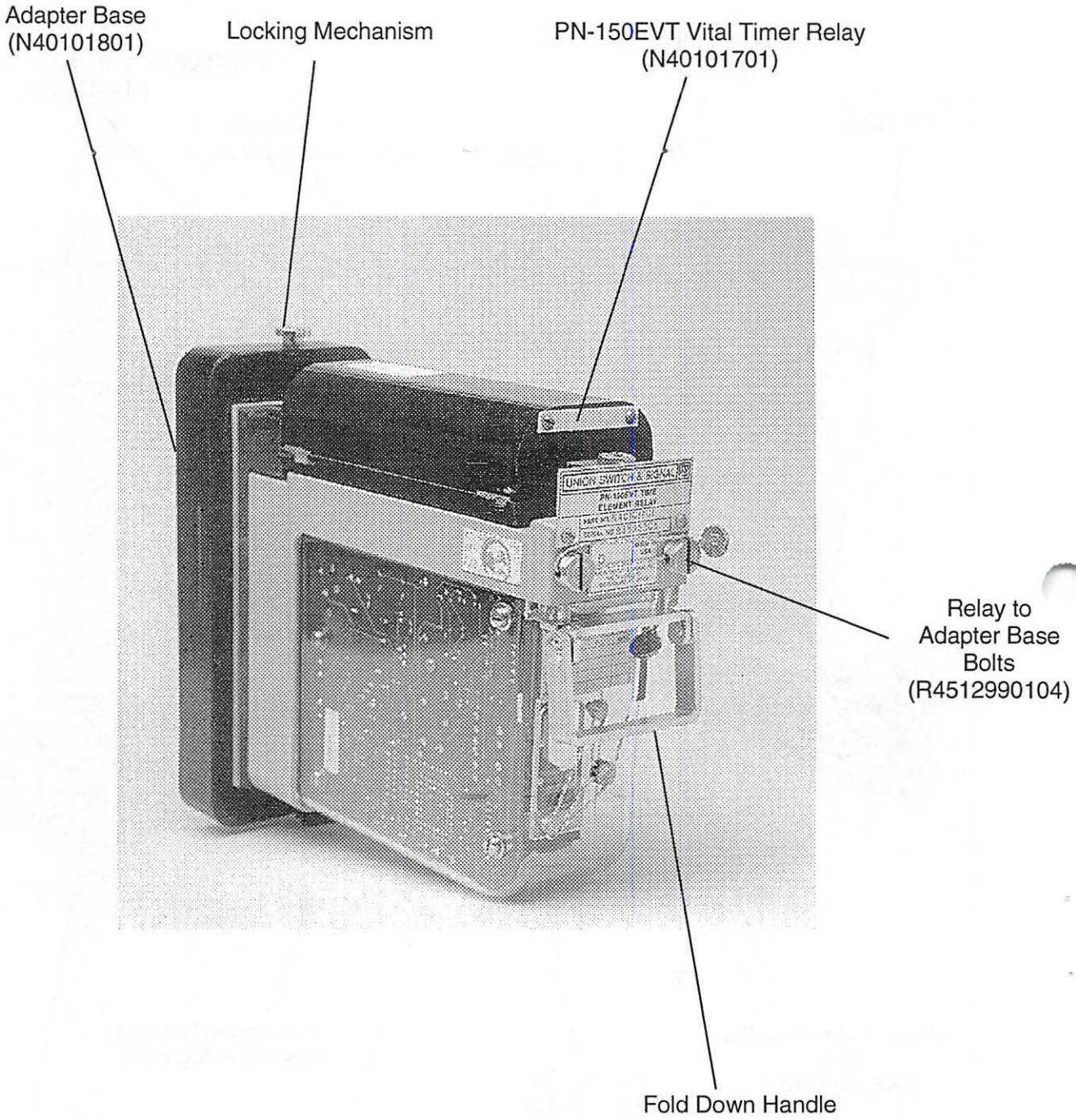

Figure 1-2. PT-55 Replacement Package (N40101001)

1.1 INTRODUCTION

The PN-150EVT is a vital time element (slow pick-up) relay. The relay's time delay is controlled by microprocessor based circuitry on a printed circuit board mounted within the relay enclosure. The design is based on the common PN-150 relay structure and is nearly identical in outward appearance. It differs from the more usual PN-150 structure because it mounts with two long mounting bolts to the base and the handle is in a fold down configuration. In an alternate version (the PT-55 Replacement Version), the PN-150EVT is fitted with an adapter base which makes it mechanically and electrically interchangeable with the PT-55 mechanical time element relay. Ordering references are as follows:

1) PN-150EVT Time Element Relay and Mounting Kit [PN-150 Style] -N40102501 (Fig. 1-1)
2) PN-150EVT [PT-55 Replacement Version] -N40101001 (Fig. 1-2)
3) PN-150EVT only -N40101701
4) Adapter Base Only -N40101801, Relay to Adapter Mounting Bolts -R4512990104

1.2 BACKGROUND

The PN-150EVT (N40101701) Programmable Timer relay was designed primarily to be a direct plug-in replacement for the PT-55 mechanical timer relay. When used without the adapter base, the unit can be used as a PN-150 style timer relay, but it does not have the same contact configuration as the PN-150T.

The PT-55 timer relay has been in service for many decades. Based on a pair of type "L" relays, which operate a clutch and ratcheting gear train, the PT-55 "counts" pulses from a 75 to 240 CPM vital coder relay. The purpose of the relay is to vitally delay an action, such as the picking of a track relay due to a poor shunt. (Momentary loss of shunt)

The PT-55 relay has two inputs. The first is a continuous, coded battery. The second is battery, switched via a contact from the relay which is to be delayed. When battery is applied to the second input, a clutch wheel in the relay is locked and the ratchet mechanism starts turning the gear train at a rate controlled by the external coder relay. As the gear train turns, it lifts a lever which slowly pulls the relay contact set up from its dropped position (backs closed). When the upper, (fronts), contacts close, an auxiliary contact opens disconnecting the coded battery from the ratchet relay. The relay will remain in the picked state until battery is removed from the second input. With the battery removed, the clutch is released and the contact set falls to the dropped position. In the dropped position, a back contact is closed so that external relay logic can check that the PT-55 has fully reset so that it will run its full-time delay on the next cycle.

The PN-150EVT (N40101701) Programmable Timer Relay provides the same function as the PT-55, with quartz timing accuracy. It also has fewer mechanical parts to require maintenance. An LED display is provided for easy setting of the delay time and for visual indication of the state of the relay, dropped, count-down, or picked.

When used with the N40101001 Adapter Base, the PN-150EVT has the same pin out as the PT-55. However, it does not use the coded battery input for timing control. Instead the coded battery is used as a power source for the micro and the other circuits with the exception of the Conditional Power Supply (CPS). The clutch input terminals are used to start the count down and to provide primary power to the CPS. When the CPS is activated by the microprocessor, the relay contacts are pulled to the picked position, (fronts closed/ back open).

Another slight difference is found in the operation of the BACK contacts. On some PT-55 timers, up to three back contacts are provided. These back contacts are labeled as 4CH/4CB, 5CH/5CB, and 6CH/6CB. The "C" in the label indicates that this is a "checking" contact. On the PT-55, the checking contacts would be open whenever power was applied to the clutch (Start/Run) input, or if the timing mechanism was not in the fully dropped position. These checking contacts were used to make sure that the relay would delay for its full-time setting. Since the PN-150EVT has no mechanical timing elements, the checking contacts are not needed. The microprocessor will always run the full programmed time. However, to provide compatibility with existing signaling systems, a single "live" back contact is provided on 6CH/6CB. This contact is really a 6TH/6TB, since the contact does not open until the delay time has expired. The 5CH/5CB contact is permanently shorted, and the 4CH/4CB contact is permanently open. This contact arrangement should cover almost all applications.

The end user has the ability to program the time delay within two ranges: 0.3 to 59.9 seconds, and 0 min., 1 second to 59 min. and 59 seconds, via the display and programming switches. The setting is vitally stored in an Electrically Erasable Programmable Read Only Memory, EEPROM, located within the 68HC11 MCU.

1.3 SPECIFICATIONS

Dimensions:	H= 8 1/4", W= 3 1/4", D= 9 7/64"
Operating Voltage:	9.0 to 30 volts filtered DC
	9.0 to 24 +/- 0.2 Vdc unfiltered full wave rectified with power supply being unfiltered full wave rectified AC voltage between 25 - 60Hz.
	72 to 240 CPM @ 35% duty cycle
	Unit has reverse polarity protection on "coder" input. Both inputs are fused at 3A and clamped at 33V peak
Current Drain:	Max. current draw 100 mA. with a possible 300 mA. surge current on initial start up
Relay Contacts:	3 independent S.I.C. timed front
	1 independent S.I.C. timed back
	All contacts: 4A @ 30 VDC filtered
	4A @ 24VDC unfiltered
	4A @ 175 VAC 60 or 25 HZ
Operating Environment:	-40°C to +70°C (-40°F to +158°F)
Timing Range:	0.3 to 59.9 seconds in 0.1 second increments
	1 second to 59 minutes and 59 seconds in 1 second increments
Accuracy:	+/- 0.2 second with Vin > 10 VDC Below 10V time may run long by an additional 0.1 second

1.4 FEATURES AND PRINCIPLE OF OPERATION

1.4.1. Time Base

The time base for the unit is a crystal oscillator. Upon activation a counting sequence is started. When the number of counts matches the time to which the unit is set, an output voltage is delivered to energize the relay.

1.4.2 Display and Toggle Switches

Two toggle switches are used to set the time delay. A four character LED display is used to indicate the time delay. Both the display and toggle switches are located on the face of the relay under the transparent cover. Tampering is prevented by lead seals wired to access screws.

1.4.3. Power Sources and Considerations

Two power sources are required. A main power source, either steady or coded DC is used to power the CPU and the display. The second DC source, when switched ON provides power to the CPS and activates the counting sequence. Compatibility with an ON/ OFF coded input is essential to facilitate interchange with the PT-55 as a replacement. (With the PT-55, the coded input operates a ratcheting mechanism to close relay contacts after a number of cycles have accumulated. The PN-150EVT relay does not depend on the code rate. It uses an independent time base and the accuracy of the time delay is thus independent of the code rate The coder input is used only as a power source. Figure 1-3 shows a block diagram of the timer.

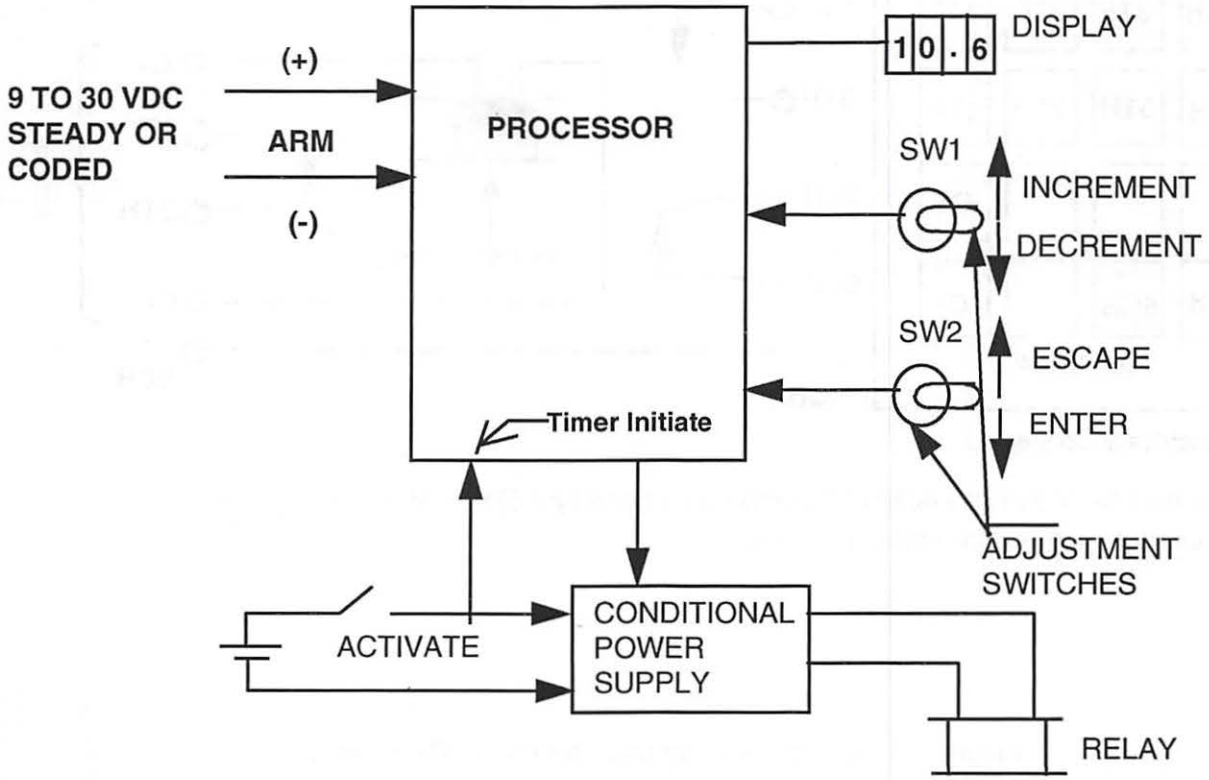

Figure 1-3. Timer Block Diagram

1.5 CONTACT ARRANGEMENTS

1.5.1 Contact Arrangement for PT-55 Replacement Version

For the PT-55 replacement, the adapter base markings and corresponding schematic are shown in Figure 1-4. The terminals marked D+ and D- are the coded battery input. This coded (or steady) battery is used as a power source to run the PN-150EVT's CPU and display. Delayed relay pick up occurs when a battery in the range of 9.0 to 24 VDC is applied to C+ and C-.

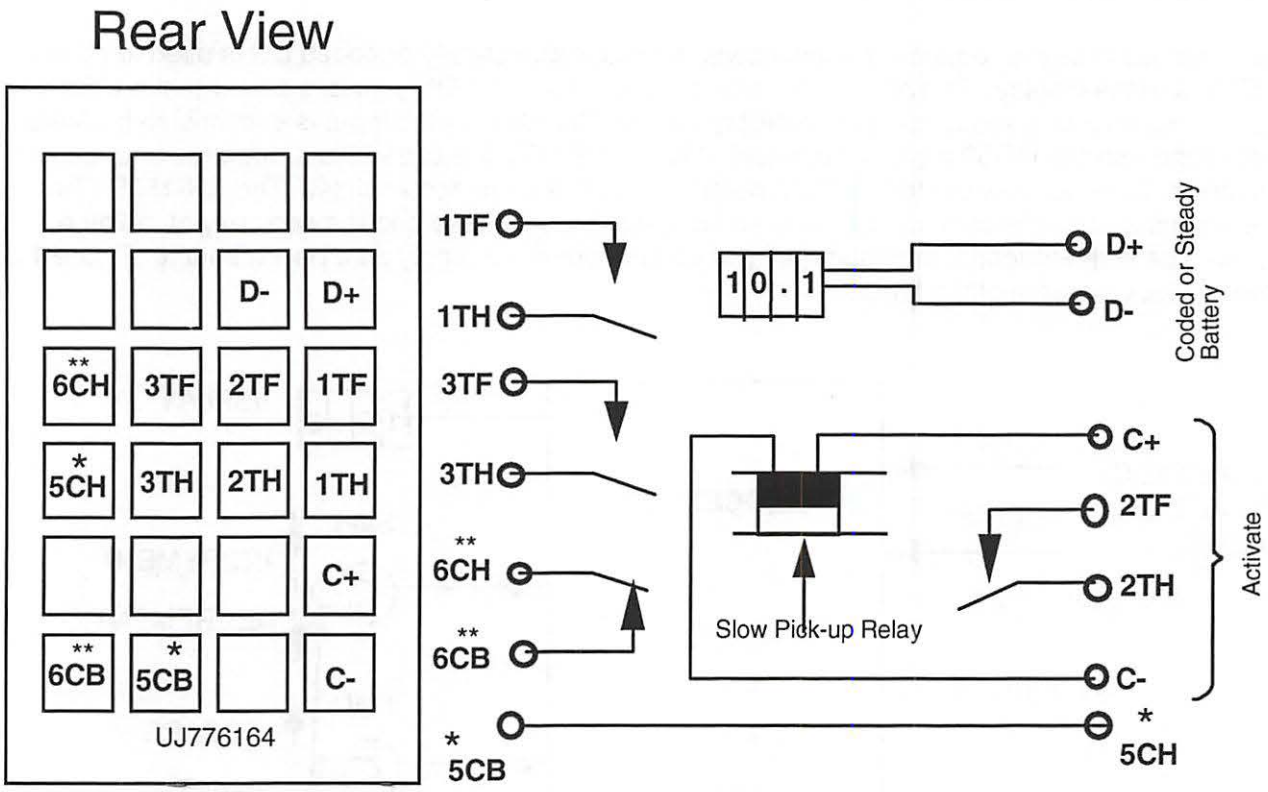

* Electrically Connected

** On the PN-150EVT, the 6CH/ 6CB contact is replaced by a 6TH/ 6TB since contact 6 does not open until the time delay has expired

Figure 1-4. Contact Arrangement for PT-55 Replacement

1.5.2 Contact Arrangement for PN-150EVT Version

Three silver impregnated carbon (SIC) normally open contacts and a single independent normally closed contact are provided. A rear view of the plug in base for the PN-150EVT version is shown in Figure 1-5. This figure identifies each terminal by row (number) and column (letter) designation and function. It is also shown in schematic form.

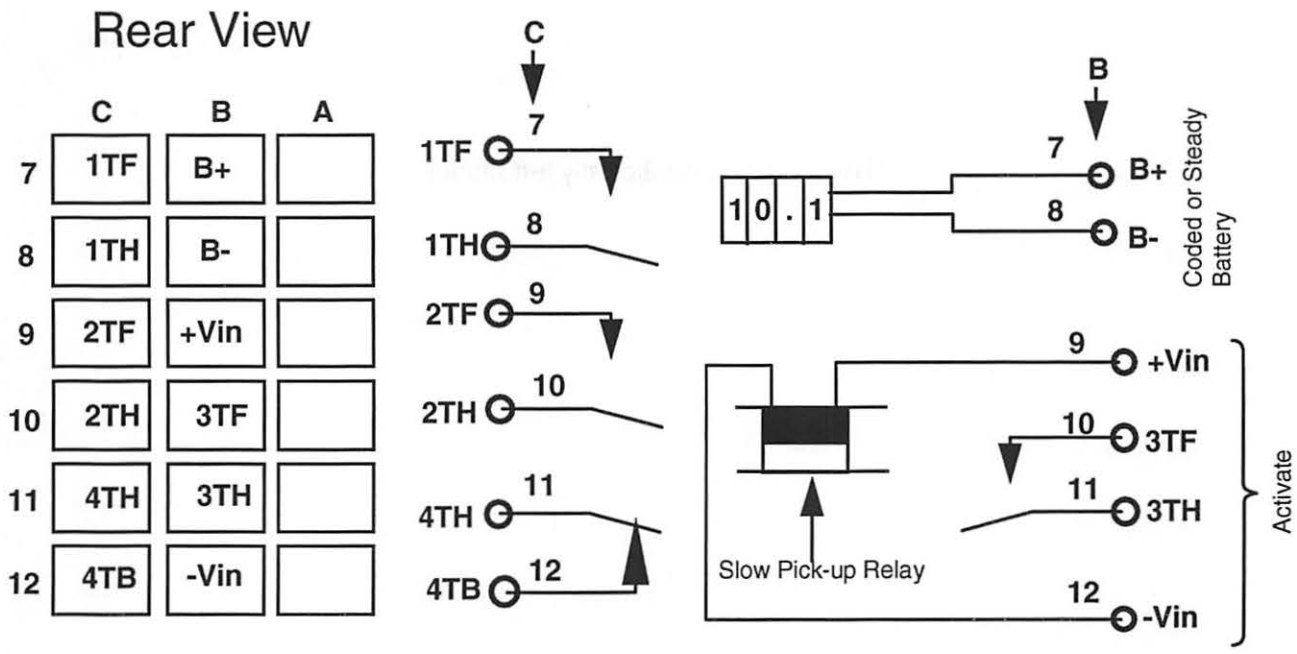

Figure 1-5. Contact Arrangement for PN-150EVT Version

(This page is intentionally left blank)

2.1 TESTING SETUP

Testing the time delay before installation is not necessary. However, if desired, an operational check may be performed in a shop environment before the unit is installed. This may be done using the simple set-ups shown in Figure 2-1 and by completing the Testing Procedure in Section 2.2.

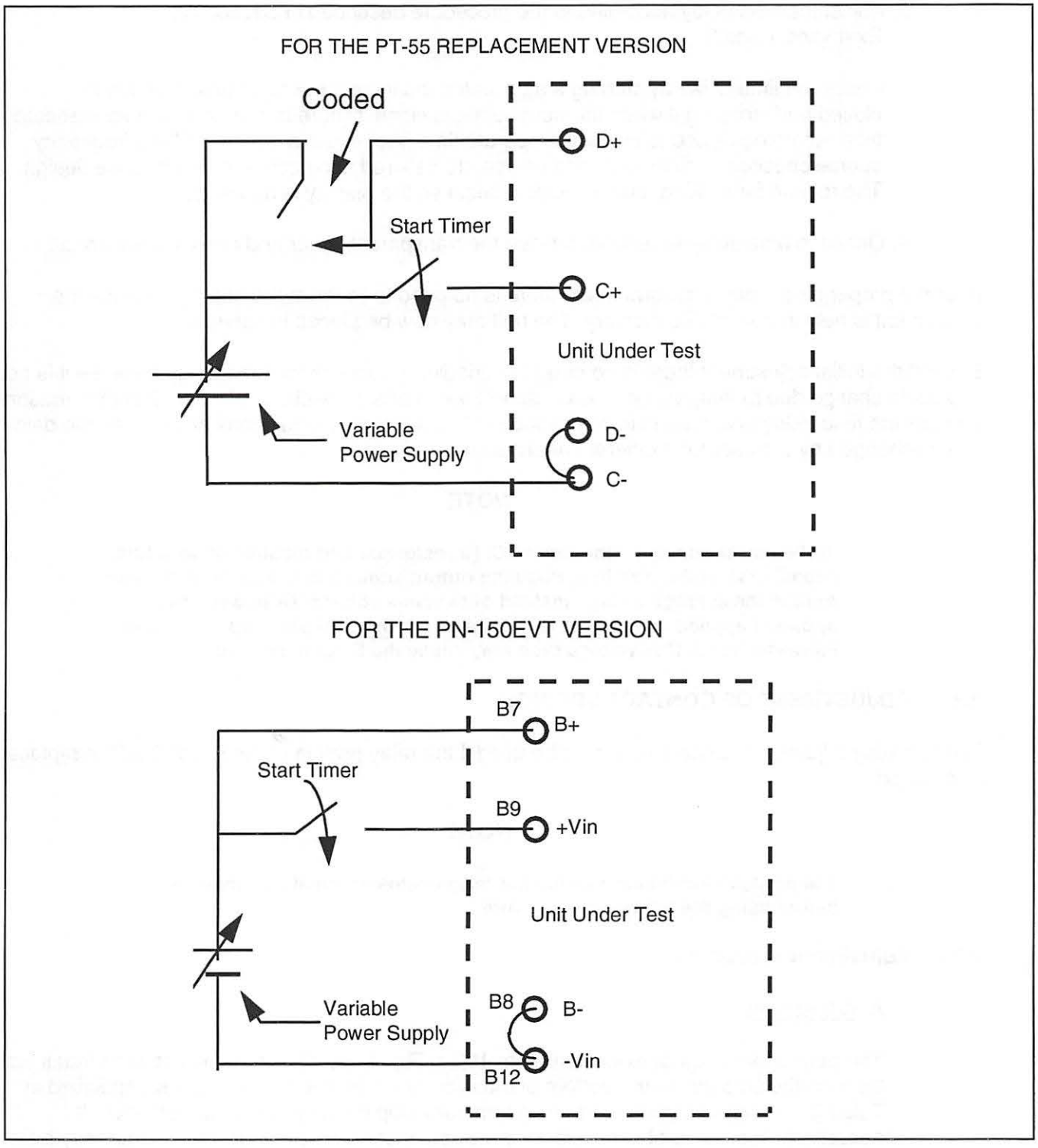

Figure 2-1. Time Delay Test Set-Ups

2.2 SHOP TESTING PROCEDURES

The following procedure should be performed to test the time delay properly.

1. Set the power supply to the minimum voltage expected in service.

2. Adjust the time delay according to the procedure described in Section IV, Examples 1 and 2.

3. Check the time delay by starting a stop watch the instant the "start timer" switch is closed and stopping it when the front contacts close. (There is no need for a sophisticated time recording device to check the operate time because it is controlled by a frequency source checked against a second source. Its assured accuracy is inherent to the design. The reason for making a time check is because the display is non-vital).

4. Once the time delay is verified, replace the transparent cover and apply the wire seal.

After the proper time delay is programmed, there is no need to readjust the setting because the adjustment is held in nonvolatile memory. The unit may now be placed in service.

Beyond the initial adjustment there is no need to periodically recheck the time delay because it is not subject to change due to temperature, power supply variations or mechanical wear. The only reason to recheck the time delay is to remain in compliance with government regulations or because the delay time is changed by the user for a different application.

NOTE

If the power supply is unfiltered DC, (transformer and rectifier without filter capacitors), make sure to preload the output enough to cause the volt meter to read the average voltage instead of the peak voltage. Otherwise, the apparent applied voltage will drop as soon as the CPS picks up due to the increased load. This voltage drop may cause the timer to recycle.

2.3 ADJUSTMENT OF CONTACT SPRINGS

The following adjustment procedure should be used if the relay portion of the PN-150EVT is replaced or repaired.

NOTE

The printed circuit board within the relay enclosure must be removed before using the following procedure.

2.3.1 Adjustment Procedure

A. Adjustment

The permanent magnet extension (Item 190 in Fig. A-2A) should be adjusted so that it just touches the stop pin on the bottom of the armature with the nominal spacer, specified in Table 2-1, inserted between the main armature stop pin and the upper pole face. If necessary, in order to obtain calibration values or contact openings, this spacer may be varied within the limits given inTable 2-1.

Table 2-1. Adjusting and Test Tabulation for PN-150EVT Vital Timer.

Test #	Description	Relays with Original Design Heels Nominal	Minimum	Maximum	Remarks
1	Permanent Magnet Extension Adjustment	0.117"	0.110	0.130"	Main stop-pin space for adjustment. Back stop pin touching.
2	Front Contact Adjustment	0.043"	0.037"	----	Main stop-pin space. Contact just open.
2A	Front Contact Adjustment	0.038"	0.032"	----	Main stop-pin space. Contact just closed.
3	Back Contact Adjustment	0.076"	----	0.081"	Main stop-pin face. Contact just open.
4	Back Contact Compression Test	0.082"	----	0.087"	Main stop-pin space. Contacts must close.
5	A.-Front Contact Openings	----	0.020"	----	With back contacts closed.
	B.-Front Contact Openings	----	0.050"	----	Armature released against permanent magnet extension.
	C.-Front & Back Contact Openings	----	0.005"	----	With operating arms removed.
6	Polarity Test	Charge Value			Positive lead on red+ for pick-up. With leads reversed, armature must stay down. Reverse several times.
7	Drop-away	----	Table 2-2	----	After Charge. To close back contacts.
10	Pick-up without cover	----	----	Table 2-2	To close front contacts.
11	Working (to stop-pin)	----	----	Table 2-2	

12	Hold-down torque	---- 120 grams. ----	Force on bottom contact engaging pin of operating arm to pull armature from permanent magnet after charge.
13	Final Electrical Inspection		Recheck Tests Nos. 6 -11

Table 2-1. Adjusting and Test Tabulation for PN-150EVT Vital Timer

B. Adjusting the Front and Heel Contact Springs

1. Using the Test #2 values from Table 2-1, hold a gauge of the proper value firmly at the main stop pin by energizing the relay, adjust the front contact springs so that light is just barely visible between the contact tips. A 0.005" thinner spacer should allow the contacts to close. De-energize the relay and remove the gauge.

2. Remove the operating arm by slightly compressing the extreme front end of the heel spring and hold it clear from all heel springs. Adjust the heel spring members so that there is 0.005" to 0.010" clearance between the front contacts and the heel contact tips.

3. Replace the operating arm and work the armature by hand a few times to get the operating arm into its normal operating position. When replacing the operating arm, make certain that the same side is to the front, as reversing the arm may change adjustments because of slight warpages and molding tolerances. On later production arms the word "Front" is molded on one side.

4. Reinsert the Test #2 gage used above, energize the relay and readjust the front contact springs as before.

5. Check that the Test #2A value allows the contacts to close.

C. Adjusting the Back Contact Springs

1. Using the Test #3 values from Table 2-1, hold a gauge of the proper value firmly at the stop pin by energizing the relay, adjust the back contact springs so that light is just barely visible between the contact tips.

2. Check that Test #4 allows the contacts to close. Again remove the operating arm and determine that the heel contacts have at least 0.005" opening at the front and back contacts as per Test 5c.

   If the operating arm is bumped while adjusting either the front or back contacts, de-energize the relay and position the operating arm by working the armature by a hand a few times before proceeding.

3. A check must be made that when the front contacts are just touching, the back contacts have at least 0.020" opening as per Test #5A.

4. When the armature is in the fully released position, the front contacts must have at least 0.050" opening as per Test #5C.

2.3.2 Calibration

After the relay has been inspected and adjusted, it should be calibrated to meet the values given in Table 2-2. Before calibrating, the relay should be energized at the "charge" value and no higher, the energization being pole changed several times allowing the current to build up to full value in each direction.

A. Polarity Test (Test #6 - Table 2-1)

The polarity should be checked as follows: Connect the the negative power lead to the "+" or "+A" coil terminal, connect the positive power lead to the "-" or "-B" coil terminal. Energize the relay to "charge" value. The armature should not pick up. With the polarity of energization reversed so that the positive power lead is connected to the "+" or "+A" coil terminal, the relay should pick up. The "+" or "+A" coil terminal is the left-hand coil terminal on the relay as viewed from the front of the relay.

B. Drop-Away

The relay should be given a charge of four times the pick-up value and the current then gradually reduced until the armature drops away, opening all front contacts. This value should not be less than the value specified for Minimum Drop-Away in Table 2-2.

The current should be further reduced gradually and a check made that the back contacts are fully compressed (armature resting on the permanent magnet extension) at not less than the value specified for Drop-Away with Full Back Contact Compression in Table 2-2.

C. Pick-Up

Immediately after the drop-away value has been measured, the current should be reduced to zero, the circuit opened for one second, then the current again applied in the same direction, gradually increasing it until the armature moves away from the permanent extension until the armature picks up to close the front contacts. This value should not be more than that specified for Maximum Pick-Up in Table 2-2.

D. Working

This value should be obtained immediately after pick-up by further increasing the current until the armature completes its motion and closes against the pole piece. The working value should **not** be greater than the maximum value specified in Table 2-2.

Relay Resistance Ohms	Charge		Minimum Drop-Away		Drop-Away with Full Back Contact Compression		Maximum Pick-Up and Working (Full Stroke)	
	Amps.	Volts	Amps.	Volts	Amps.	Volts	Amps.	Volts
240	.07	16.9	.0063	1.5	.0042	1.0	.0133	3.2

Table 2-2. Calibration Values for PN-150EVT Vital Timer

2.3.3 Check of Contact Openings

1. With the armature against the permanent magnet, there must be a front contact opening of at least that specified in Table 2-1 for Test #5b.

2. With the back contacts just closed, there should be a front contact opening of at least that given in Table 2-1 for Test #5a.

2.3.4 Permanent Magnet Hold-Down Force

With the relay in the normal upright position and de-energized, a force of at least 120 grams applied on the end of the bottom horizontal contact engaging pin of the operating arm should be required to cause the armature to move away from the permanent magnet (See figure A-2A). This check should be made before and after the relay has been calibrated and after energizing with the charge value using normal polarity of energization.

Because of the allowable variation in the stiffness of the material from which the contact springs are made, the hold down force may vary between relays that have the same strength magnets. For this reason, on relays that have 275 grams or more hold-down force (using nominal spacers) replace one of the phosphor bronze screws (shiny nickel plating) that holds the magnet assembly to the pole piece with a tin plated steel screw (dull) J463078 which will shunt some of the magnetic flux. Bending the adjustable shunt away from the magnet slightly will raise the hold-down force slightly if necessary.

2.3.5 Contact Resistance

Resistance of front contacts should be measured with the relay energized and the armature against the stop pin, that of back contacts with the armature in the de-energized position. Cleaned contact resistances must not exceed the values given in Table 2-3.

Type of Contacts	Ohms (Max) Front Contact	Ohms (Max) Back Contact
Silver to Silver Impregnated Carbon	0.09	0.18

Table 2-3. Contact Resistance

3.1 GENERAL INSTALLATION

Installation procedures for the PN-150EVT relay depend upon whether the relay will be installed as a replacement for the PT-55, as a new installation, or as a replacement for the PN-150T. For proper installation procedures refer to the following sections:

PT-55 Replacement	Refer to Section 3.2
New Installation	Refer to Section 3.3
PN-150T Replacement	Refer to Section 3.4

3.2 PT-55 REPLACEMENT INSTALLATION

The PT-55 replacement package (N40101001) has the relay mounted onto an adapter base (N40101801). The adapter base transitions the terminals and mounting assembly to functionally match those of the PT-55 mechanical time element relay. To install, use the following procedure.

1. Raise the locking mechanism on the PT-55 relay.
2. Remove the PT-55 relay from its mounting base.
3. Raise the locking mechanism on the new relay's adapter base.
4. Insert the new relay with its adapter base into the PT-55's mounting base.
5. Release the locking mechanism and check relay for mechanical security.
6. The relay is ready for programming.

3.3 NEW INSTALLATION

The PN-150EVT includes a mounting kit (X40102001) which contains all the necessary hardware for proper installation. To install the PN-150EVT use the following procedure.

1. Check the mounting kit to be sure it contains the mounting base (J780055), the indexing plate (M40101901) and its accompanying screws (J052246), the aluminum mounting plate (M40101601) and its accompanying screws (J5072950108), and 2 long mounting bolts (R4512990104). See Page A-6 for a list of parts.
2. Mount the indexing plate (M40101901) to the mounting base with the screws (J052246) provided.
3. Screw the aluminum mounting plate (M40101601) to the back of the mounting base with the screws (J5072950108) provided. The screws should pass through the smaller holes in the mounting plate.
4. Secure the mounting base to the relay rack.
5. Wire timer to specific application circuits. (Refer to Sections 3.6 and 3.7 for contact receptacle spring, wiring and crimping information).

6. Insert the new relay (N40101701) into the mounting base, continuing to hold the relay in place.

7. Secure the relay by inserting the mounting bolts (R4512990104) through the holes on the front of the relay into the mounting base, and then screwing the bolts through the threaded holes on the aluminum mounting plate. The bolts should be tightened to 25 inch pounds of torque.

8. The relay is now ready for programming.

3.4 PN-150T REPLACEMENT

The PN-150EVT is the functional equivalent and will fit into the same rack space as the PN-150T electronic timer relay. However, several changes must be made to an existing location if the new relay is to be used. The wiring to the PN-150T will have to be revised to conform with Figure 1-5 which includes the addition of power wiring required to activate the timing source.

To replace a PN-150T relay after making the necessary wiring changes, use the following procedure.

1. Remove the PN-150T, its mounting base and its accompanying wiring.

NOTE

If the PN-150T being replaced uses mounting base US&S part# J780055, it, may be used as the mounting base for the PN-150EVT. If the PN-150T's base is to be reused, the PN-150T's index plate must be removed and replaced with the PN-150EVT's indexing plate.

2. Locate the PN-150EVT mounting kit (X40102001) and the PN-150EVT Relay (N40101701).

3. Follow steps 1-8 in section 3.3.

3.5 Relay Indexing

Relays are factory equipped with indexing pins to prevent insertion of an incorrect relay into a mounting base. Each relay is accompanied by an indexing plate which is applied to the mounting base at the time of initial installation.

The following data defines the indexing that has been established for relays covered by this manual.

a. The index code always consists of four figures (such as 0001, 0002, or 0101) and is used for both the relay and the indexing plate on the mounting base.

b. The index code for each mounting base is determined by the placement of the holes in the numbered vertical rows of the large white nylon indexing plate which is affixed to the front of the mounting base. Do not remove the indexing plate from the mounting base unless it is damaged or the indexing is to be purposely changed to accommodate a relay of a different part number. Discard the indexing plate which comes in a bag tied to the handle of all new relays unless it is needed for replacement of damaged indexing plate or for application to a new mounting base.

WARNING

NEVER DRILL NEW HOLES IN A BASE INDEXING PLATE WHICH WILL PERMIT APPLICATION OF RELAYS WITH DIFFERENT PART NUMBER OR CHANGE INDEXING PINS ON THE BACK OF A RELAY UNLESS IT IS BEING CONVERTED TO A NEW PART NUMBER. OTHERWISE, SAFE FUNCTIONING OF THE CIRCUIT IN WHICH THE RELAY IS USED MAY BE COMPROMISED.

3.6 RECEPTACLE CONTACT SPRINGS

The one piece mounting base with hardware (X401020001) includes a full complement of receptacle contact springs (M451142-2702) to accommodate one or two #14 - #16 wires, mounting fasteners, and tags. It can also be equipped with receptacle contact springs for one or two #10 - #12 wires (M451142-2703), or for one or two #18 - #20 wires (M451142-2701). Make certain which type of solderless receptacle contact springs accompany the mounting base before proceeding with their installation.

Inspect each solderless receptacle contact spring before proceeding with installation.

The following is recommended when installing solderless receptacle contact springs:

a. Receptacle contact springs must be inserted into the base with the lanced tab up.

b. Make certain that the lanced tab is slightly compressed as the receptacle contact spring is inserted along the top of the cavity. The lanced tab could have been bent during handling, and therefore might not provide the required contact pressure after the relay is inserted. If the lanced tab does not touch, slightly compress using fingers or suitable tool.

c. After insertion, pull firmly on the wire to make certain the receptacle contact spring is locked in the mounting base.

3.7 CRIMPING WIRES INTO RECEPTACLE CONTACT SPRINGS

Use the following procedure to ensure a good electrical and mechanical connection between the conductor wire and the receptacle contact spring. The following table identifies the correct crimping tool to be used when installing wires in receptacle contact springs.

Crimping Tool	Wire Size	Receptacle Contact Spring
J397138	#10/#12 AWG	M451142-2703
J397139	#14/#16 AWG	M451142-2702
J397188	#18/#20 AWG	M451142-2701

1. Strip 3/16 in. (0.187 in. or 0.47 cm.) of insulation from the end of the wire.

2. Place the receptacle contact spring into the jaws of the proper crimping tool. When using only one wire, use the shortest barrel.

3. Partially close the crimping tool jaws against the receptacle contact spring to hold it in place. (Do not crush the receptacle contact spring barrel at this time.)

4. Insert the stripped end of the wire completely into the receptacle contact spring barrel. Squeeze the tool handles until crimping is completed and the jaws release. When using both barrels, it is more convenient to attach the first wire to the longest barrel.

5. Remove the crimped receptacle contact spring from the tool and inspect the connection. Make certain that the wire is flush with the crimped barrel and that there are no loose strands of wire.

4.1 PROGRAMMING THE PICK-UP DELAY TIME

The relay's pick-up delay time is adjusted by using the two toggle switches located under the transparent cover on the front of the relay. Remove the two fillister head screws holding the transparent cover in place to access the switches. The screw heads are drilled so that they can be wired together and sealed to secure the settings after the adjustment is made.

Adjustment Ranges

There are two adjustment ranges:

1st Range 0.3 seconds - 59.9 seconds.
Adjustable in 0.1 second increments.

2nd Range 1 second - 59 minutes, 59 seconds
Adjustable in 1 second increments.

The upper toggle switch (SW1) is used to manipulate the menu and digits on the display.

The lower toggle switch (SW2) serves the **"ENTER"** and **"ESCAPE"** functions. When (SW2) is pushed down, it activates the ENTER function. When (SW2) is pushed upwards, it activates the ESCAPE function.

The adjustment procedure is explained in the two examples that follow.

Example 1

The following example shows how the toggle switches are manipulated to reach a desired setting in the seconds range (Range 1).

The arrows in columns **SW1** and **SW2** indicate the direction the switch is to be pushed. The numbers in the **Display** columns indicate what should appear on the LED. The contents of the last column explain the results of executing the switch commands and an explanation of the display.

Assume the current setting is 8.7 seconds and it is desired to change the time to 10.1 seconds.

	SW1 upper switch	**SW2** lower switch	**Display**				**Comment**
1			0	8	.	7	08. 7 flasing with SLO*
2		ESCAPE ↑		>	6	0	Offers selection of greater than 60 secs
3	↓ OR ↑			<	6	0	Offers selection of less than 60 secs
4		ENTER ↓	**0****	8	.	7	Selects <60 and displays flashing 0
5	Increase by 1 ↑		**1**	8	.	7	Flashing 1 indicates ready for entry or change
6		ENTER ↓	1	**8**	.	7	Pressing Enter locks a 1 in as the first digit and moves the flash to the next digit. The 8 may now be changed or entered.
7	Increase by 2 ↑↑		1	**0**	.	7	Pressing the SW1 up twice changes 8 to 0. Flash indicates it is ready for entry or change
8		ENTER ↓	1	0	.	**7**	Pressing Enter locks a 0 in as the second digit and moves the flash to the next digit. The 7 may now be changed or entered.
9	HOLD Up or Down		1	0	.	**1**	By holding SW1 up or down the display scrolls. At "1", SW1 is released.
10		ENTER ↓	1	0	.	1	Pressing Enter lock in the last digit. The adjustment is now complete. The display will now toggle alternately between 10.1 and SLO

Table 4-1. Adjustment Procedure for Seconds Range

*Alternately flashing *08.7* and *SLO* indicates the current setting and that time is not running time.
**Entries enclosed in black indicate a flashing display of that character..

Example 2

Example 2 shows how the toggle switches are manipulated to reach a desired setting in the minutes and seconds range (Range 2).

The arrows in columns **SW1** and **SW2** indicate the direction the switch is to be pushed. The numbers in the **Display** columns indicate what should appear on the LED. The contents of the last column explain the results of executing the switch commands and an explanation of the display.

Assume the current setting is 10.1 seconds and it is desired to change the time to 10 minutes and 10 seconds.

	SW1 upper switch	**SW2** lower switch	**Display**				**Comments**
1			1	0	.	1	10.1 flasing with SLO*
2		ESCAPE ↑		>	6	0	Offers selection of greater than 60 secs.
3		ENTER ↓	**0****	0		M	Accepts >60 and indicates 0 minutes
4	Increase by 1 ↑		**1**	0		M	Flashing 1 indicates ready for entry or change
5		ENTER ↓	1	**0**		M	Enter accepts 1 as first digit and flashing 0 indicates ready for entry change
6		ENTER	**1**	0		S	Flashing 1, tens of sec. ready for entry or change
The appearance of "S" as the fourth character on the display indicates minutes adjustment is complete and that adjustment of seconds is now to proceed. A "1" in the first segment is a carry over of 10.1 seconds which was the previous setting.							
7		ENTER ↓	1	**0**		S	Flashing 0 indicates ready for sec. entry or change
8		ENTER ↓	1	0	1	0	1010 flashing with SLO (Adjustment Complete

Table 4-2. Adjustment for Minutes and Seconds Range

*Alternately flashing *10.1* and *SLO* indicates the current setting and that time is not running time.
**Entries enclosed in black indicate a flashing display of that character.

4.2 TESTING THE PICK-UP DELAY TIME

1. Check the time delay by starting a stop watch at the instant the "start timer" switch is closed and stopping it when the front contacts close. (There is no need for a sophisticated time recording device to check the operate time because it is controlled by a frequency source checked against a second source. Its assured accuracy is inherent to the design. The reason for making a time check is because the display is non-vital).

2. Once the time delay is verified, replace the transparent cover. Then wire tag and seal the screws.

The unit may now be placed in service. There is no need to readjust the setting because the adjustment is held in non-volatile memory.

Beyond the initial adjustment there is no need to periodically recheck the time delay because it is not subject to change due to temperature, power supply variations or mechanical wear. The only reason to recheck the time delay is to remain in compliance with government regulations or because the delay time is changed by the user for a different application

4.3 Troubleshooting

Below is a troubleshooting table for installation of the PN-150EVT vital timer..

CONDITION	CAUSE	SOLUTION
Display not illuminated.	a. Relay not attached to mounting base properly. b. Wiring connections not attached properly. c. Incorrect input voltage	a. Firmly reattach relay to mounting base. b. Check and reattach wire connections. c. Adjust operating voltage to between 9.0 and 30 volts.
Relay not executing correct time delay.	a. Time delay not programmed correctly.	a. Reprogram delay to correct timing.

Table 4-3. Troubleshooting Table

A.1 PN-150EVT PT-55 Replacement Version (N40101001)

Refer to Figure A-1 for referencing parts.

ITEM	DESCRIPTION	US&S PART NO.
5	PN-150EVT Time Element Relay	N40101701
10	Bolt	R4512990104
15	Vital Timer Adapter Base	N40101801

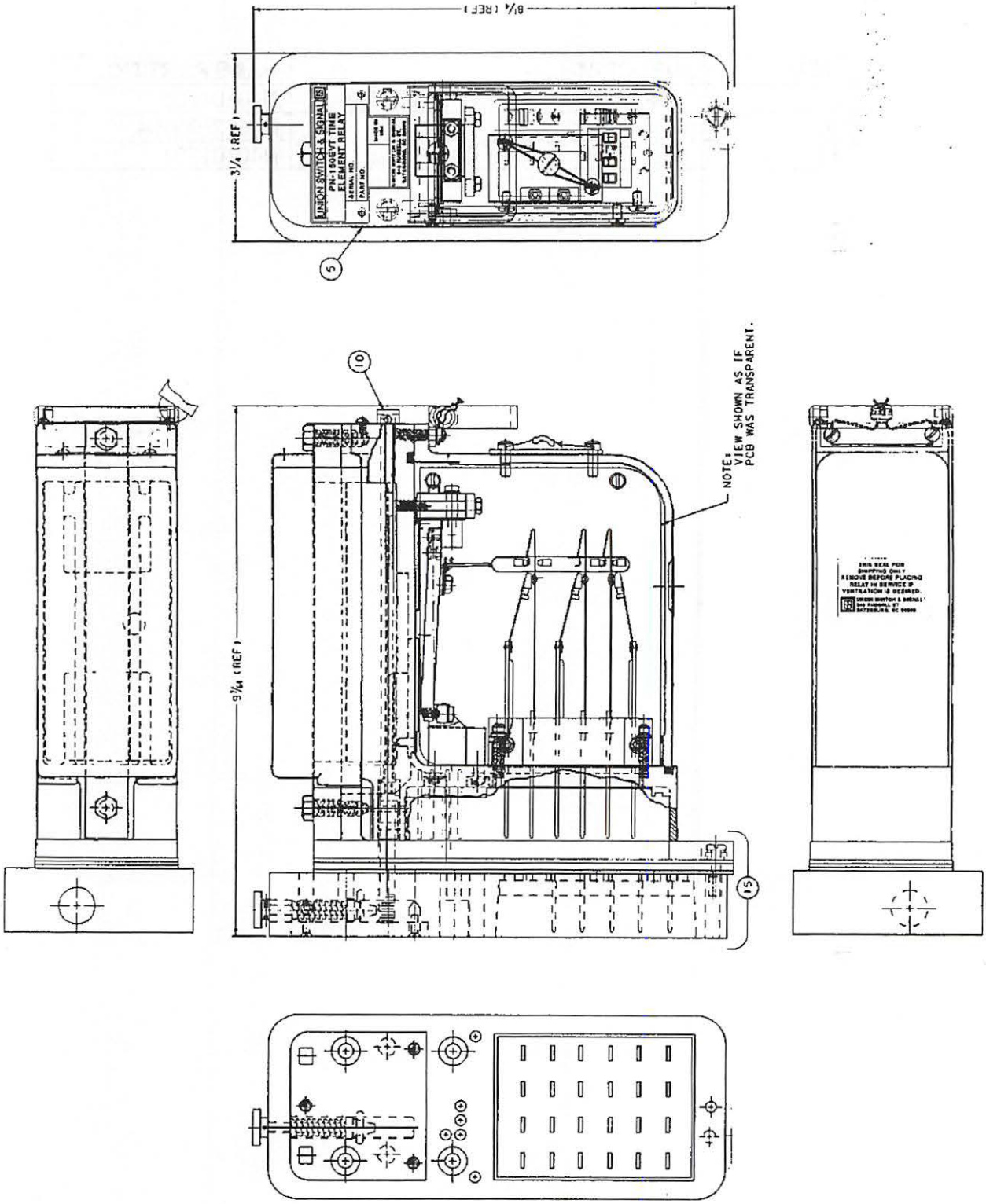

Figure A-1. PN-150EVT (PT-55 Replacement Version)

A.2 PN-150EVT Time Element Relay (N40101701)

Refer to Figure A-2 on pages A-4 and A-5 for referencing parts.

ITEM	DESCRIPTION	US&S PART NO.
05	RELAY FRAME	M40100201
10	CONTACT BLOCK	N40100601
15	SCR-SST 6-32X3/4 FH	J5072980120
20	WSHR-SST LOCK NO 6	J4751210107
25	WSHR-SST .170 ID FLT	J4751210127
30	OPERATING ARM	M373632003
35	PERMANENT MAGNET	PN435318
40	ARMATURE, REVERSE	N335757
45	STRAP	M321853
50	LOCK-BOLT MONEL MET	J792919
55	BLT- 8-32X1-1/4 STL	J463078
60	COIL, ENCAPSULATED	N399531003
65	SCR-SST 1/4-20X3/4 H	J5073000126
70	GASKET-RUBBER	J047081
75	COVER	M432996001
80	SEAL, ADHESIVE VENTIL.	J790257
85	TAG	S003665
90	HANDLE, BRACKET	N40100404
95	SCREW 8-32X9/16 FIL HD SS	J5001240042
100	WIRE SEAL #23X12 SST	A043013
105	SEAL LEAD	J079351
110	NAME PLATE	M40100501
115	SCR-SST 4-40X3/16 PAN	J5072970103
120	PLATE COVER	M40100901
125	SCR-6-32 FIL HD	J5001240045
130	VITAL TIMER LOGIC (PC Board)	N40101401
135	PIN-ROLL, SST	J048716
140	SCR-SST 6-32X5/16 PAN	J5072980105
145	SCR-6-32X7/16 IN FILH	J052243
150	WASHER	M291657
155	PARTS BAG	N3306814017
160	SCREW	M327179
165	SEALER, DUCT M-7389	A041498
170	PIN-ROLL 3/32DX1-1/8	J487090
175	SCR-6-32X3/16 SS PAN	J5072980103
180	W 20 PVC BLK M258-30	A0455050001
185	2.5 AMP FUSE FOR LOGIC PCB	J7100380066

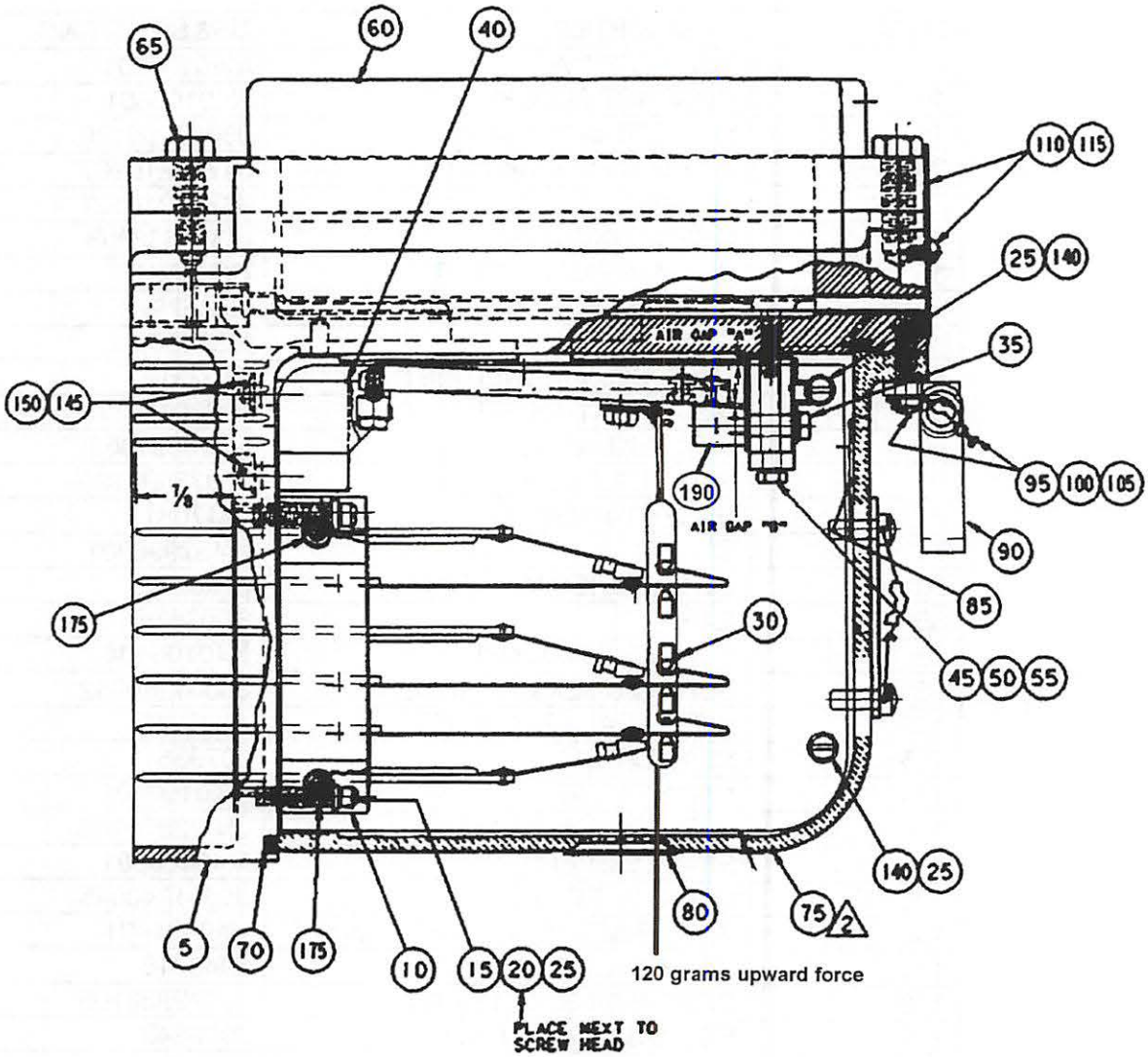

SIDE VIEW

Figure A-2. PN-150EVT Time Element Relay (Contd. on Page A-5)

LOCATION OF INDEXING PINS			
ROW			
A	B	C	D
4	0	1	7

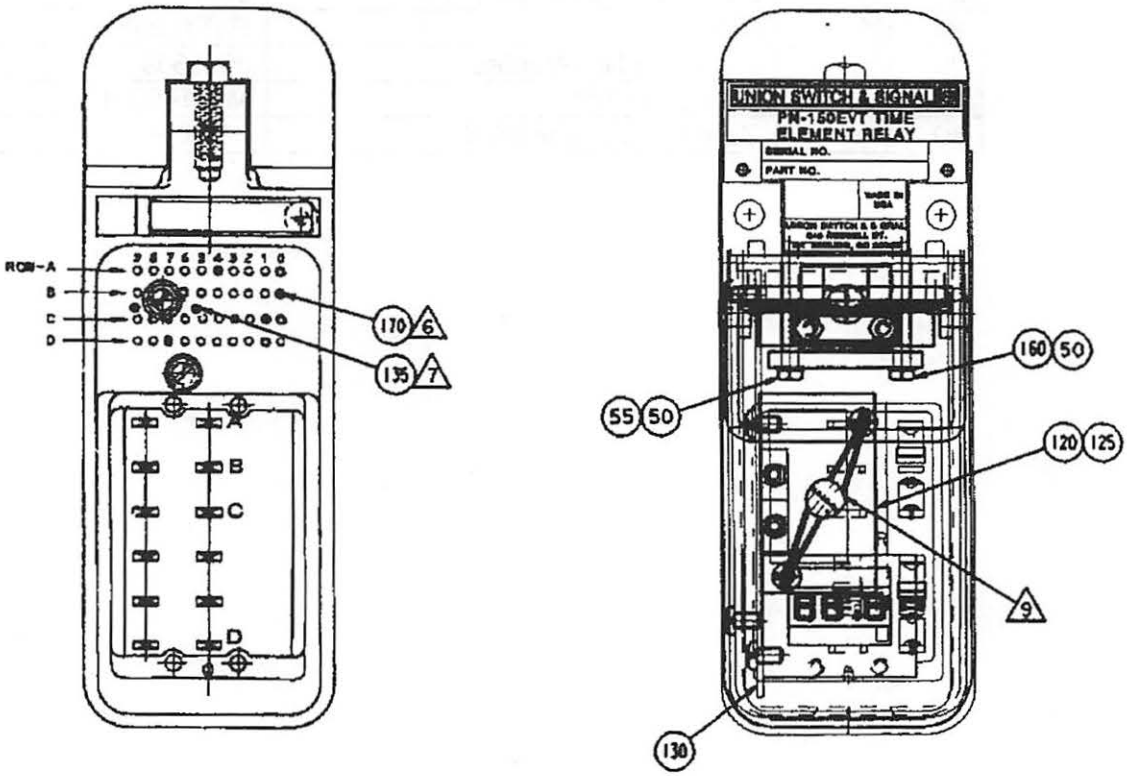

REAR VIEW

FRONT VIEW

WIRING CONNECTIONS				
FROM		TO PCB	WIRE	LENGTH
CONTACT BLOCK	CONTACT "A"	J1-1	(180) BLACK	2½"
	"B"	J1-2		
	"C"	J2-1		
	"D"	J2-2		
COIL	RED	J3-1	SUPPLIED WITH COIL	
	BLACK	J3-2		

Figure A-2. PN-150EVT Time Element Relay (Continued from Page A-4)

A.3 PN-150EVT Mounting Kit (X40102001)

See drawings on page A-7 for referencing parts.

ITEM (QTY)	DESCRIPTION	US&S PART NO.
05 (1)	Indexing Plate	M40101901
10 (2)	SCR - 6 - 32 X 1-1/4 FILH	J052246
15 (1)	Mounting Base	M40101601
20 (2)	SCR-SST 8-32 X 1/2 PAN	J5072950108
25 (2)	Bolt	R4512990104
30 (1)	Bag-Food Non-Vented	J055609
35 (1)	Instruction Tag	M40102301
40 (1)	Base-Mounting Molded	J780055

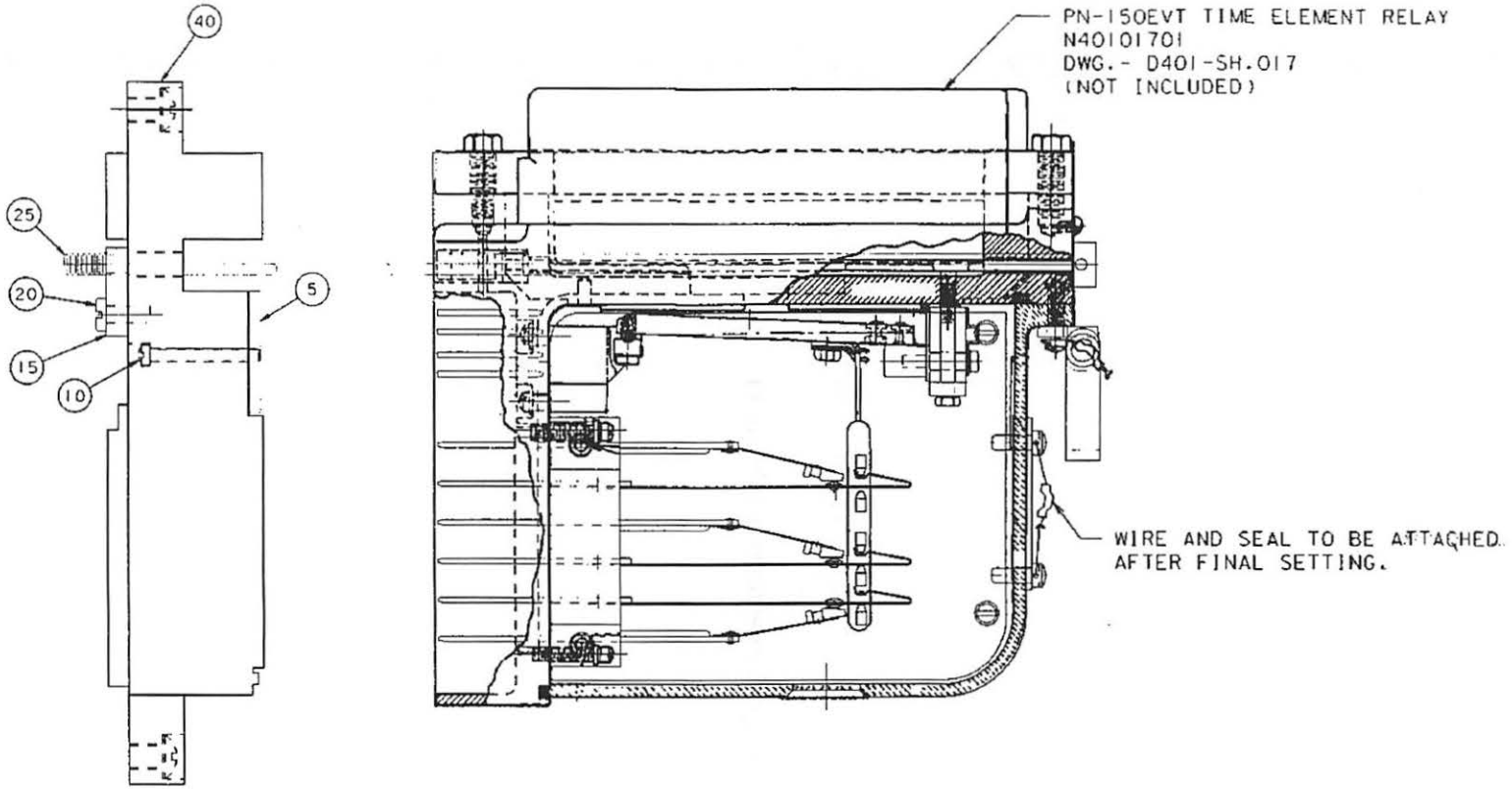

ORDERING REFERENCE - RELAY CONTACT SPRINGS - ORDER SEPARATELY	
WIRE SIZE	PART NUMBER
#10 - #12	M451142-2703
#14 - #16	M451142-2702
#18 - #20	M451142-2701

Figure A-3. PN-150EVT Mounting Kit

(This page is intentionally left blank)

CROSS REFERENCE INDEX

US&S Plug-In Relays are alphabetically listed below, by type and designation. The relay description and catalog section in which the relay appears are shown opposite the relay designation.

RELAY	DESCRIPTION	CATALOG SECTION
PA-150SO	Switch Control - DC Type	RSE-4D2
* PC-250B	Code Following	RSE-4E3
* PC-250BAE	Code Following - High Efficiency	RSE-4E3
* PC-250BE	Code Following - High Efficiency	RSE-4E3
* PC-250P	Code Following - Magnetic Stick	RSE-4E3
* PC-250TR	Code Generating	RSE-4E1
* PF-256	Flasher, DC	RSE-4F1
PN-150B	Line, Biased DC	RSE-4A1
PN-150BC	Code Following	RSE-4E3
PN-150BD	Line, Biased DC	RSE-4A1
PN-150BE	Code Following	RSE-4E3
PN-150BH	Track - High Dropaway	RSE-4B1
PN-150BL	Light-Out	RSE-4F3
PN-150BM	Switch Control	RSE-4A5
PN-150BQS	Track, Biased DC-Quick Shunting	RSE-4B1
PN-150BSR	Line - Slow Dropaway	RSE-4A3
PN-150BTR	Track, Biased DC	RSE-4B1
PN-150HD	Line, DC	RSE-4A1
PN-150N	Line, Neutral DC	RSE-4A2
PN-150NE	Code Following	RSE-4E3
PN-150P	Power Off	RSE-4F4
PN-150SO	Switch Control, DC	RSE-4D1
PN-152SO	Switch Control, DC	RSE-4D1
PN-150T	Time Element (Electronic)	RSE-4F6
PN-250B	Line, Biased DC	RSE-4A1
PN-250BE	Code Following	RSE-4E3
PN-258B	Line - Slow Pickup	RSE-4A3
PN-258BC	Decoding, Biased DC	RSE-4E2
PN-259BSR	Line, Slow Dropaway & Pickup	RSE-4A3
PN-259BSR	Line, Slow Dropaway	RSE-4A3
PN-259SRA	Line, Slow Dropaway	RSE-4A3
PP-151	Line, Magnetic Stick	RSE-4A4
PT-150	Time Element (Thermal)	RSE-4F2
PT-55	Time Element (Mechanical)	RSE-4F5
PV-250	AC Vane	RSE-4C1

* This relay is considered vital except for the contact material. The application of these relays preclude the necessity for non-welding contacts.

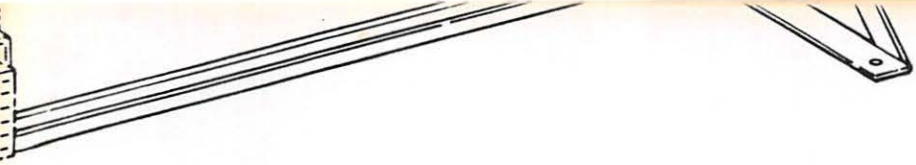

PART NO.	DESCRIPTION
N436182-001	SHELF MOUNTING FRAME with 36 AAR terminals mounted above plug-in base.
N436182	SHELF MOUNTING FRAME without AAR terminals.

CRIMPING TOOLS

ping tools for various wire sizes for crimping PN-150 and PN-250 relay
Order the crimping tools by part number from the tabulation. To aid in
propriate wire size along with the part number when ordering.

CRIMPING TOOL PART NO.	AWG. WIRE SIZE	OLD STYLE RECP. CON. SPR.	NEW DESIGN RECP. CON. SPR.
J397139	#14/#16	J680165	J680195-0001*
J397138	#10/#12	J680181	J680195-0002
J397188	#18/#20	J680179	J680195

***Relay bases are shipped with these receptacle springs as standard.**

GENERAL INFORMATION FOR PLUG-IN RELAYS

NOTICE

Plug-In Replacements for Shelf Type Relays

For Plug-In Relay replacements for shelf type relays, contact your Union Switch & Signal Sales Representative. He can quickly provide you with information on plug-in replay replacements for existing shelf relays.

US&S offers a complete line of plug-in relays for railway signaling applications. The relays covered in the following sections are standard relays which may be applied to most standard situations. This catalog section covers specifications and features common to all Vital Plug-In Relays and Ordering Information for:

- ***Shelf Mounting Brackets.***
- ***Shelf Mounting Frames.***
- ***Contact Springs.***
- ***Test Plugs.***
- ***Wire Crimping Tools.***

For detailed information on plug-in relays, consult the following catalog sections.

For details on mounting bases for plug-in relays, refer to RSE-4G1.

As of 1982, new mounting bases are available having new part numbers. The cross reference substitution table in RSE-4G1 will aid in ordering replacement mounting bases when the old part number is known.

US&S also manufactures special duty relays not listed in these sections. For more information on these special relays or for a relay of your specifications, consult your nearest US&S representative.

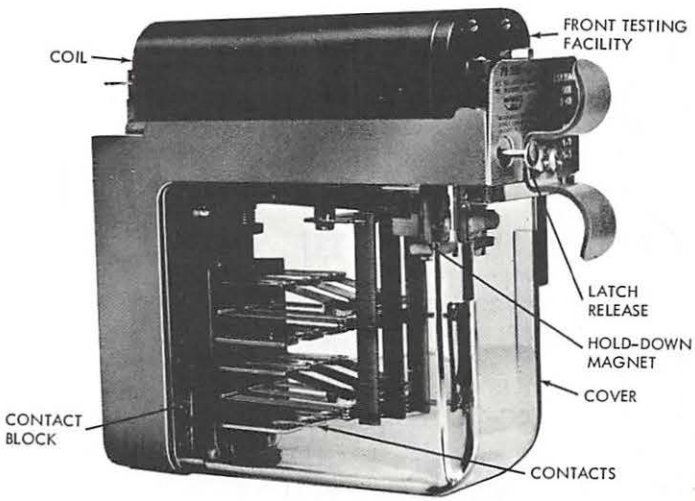

TYPE	HEIGHT	WIDTH	DEPTH
PN-150	7-1/16″	2-7/16″	8-7/32″
PN-250	7-1/16″	4-15/16″	8-7/32″

TYPICAL PLUG-IN RELAY

FEATURES

- Meets applicable AAR requirements.
- All current carrying parts are insulated to withstand a 3000-volt ground test.
- Factory calibrated for application across a wide environmental range. Operating temperature range -40°F to +185°F.
- Moving parts are protected by a sturdy, transparent dust and moisture resistance cover.
- Relay pulls out or plugs in horizontally.
- Relay locks securely in plug-in position.
- Plug connections are protected from dust, moisture, and mechanical damage.
- All relays have indexing pins to ensure insertion of the proper relay.

DESCRIPTION

US&S plug-in relays have been developed to serve a multitude of signal circuit applications. These diversified relays combine the advantages of space saving, ease of mounting and replacement without disturbing coil or contact wiring.

US&S plug-in relays are factory calibrated, adaptable to any existing signaling system, and are available for immediate application to any signal installation.

COILS

Coils are manufactured under rigid quality and reliability controls and are encapsulated for protection against mechanical injury and the entrance of moisture.

MAGNETIC CIRCUIT

Magnetic circuits are constructed of nonaging material. The magnetic air gap is not disturbed when the coil is removed or contact springs adjusted. Relays with an adjustable magnetic shunt may be adjusted for degree of magnetic hold-down force without changing the contact adjustment or the hold-down polepiece position.

CONTACTS

Contact fingers and springs are simply constructed and heat-treated to assure uniformity of material and contact stability. The heavy contact fingers extend through the base to serve as plug connectors. Heel contacts are actuated by operating arms pivoted to the armature. Contact surfaces have sufficient wiping action to be self-cleaning.

The contact material and capability designated by symbol in the tabulations are as follows:

Std.- Fine silver heel contact with silver-impregnated carbon front contact and fine silver back contact. These contacts have a capacity of 4 amperes at 30 volts dc or 175 volts ac.

S.I.C. - Fine silver heel contact with silver-impregnated carbon front and back contacts. These contacts have a capacity of 4 amperes at 30 volts dc or 175 volts ac.

H.D. - Fine silver heel contact with silver-impregnated carbon front contact and fine silver back contact. These contacts have a capacity of 15 amperes at 30 volts dc or ac.

Other types of contact material, for special application, is presented in the relay tabulations. Std. contacts are factory adjusted to standard 0.050″ minimum opening and conform to AAR requirements.

The front and back contacts are designated F and B, respectively, in the tabulations. The dependent contacts are denoted in the tabulations as FB while the independent contacts are denoted by use of the F or B alone.

COVER

A cover of transparent molded material houses the relay contacts and armature structure. The cover is sealed to its frame by pressure against a gasket providing a tight dust-proof moisture protected assembly.

FRONT TESTING FACILITY

This testing facility is in series with the coil control circuit to permit deenergization of the relay while in service without disturbing the relay or wiring.

LATCH

A spring-operated latch holds the relay to the mounting base. It is released by pressing a button on front of the relay.

SYSTEM VOLTAGE

This voltage, listed in the individual relay tabulations, is prescribed for relays in locally energized circuits. Higher voltages may be used, if desired, up to a maximum of 10 watts power dissipation.

MOUNTING BASES

Mounting bases for plug-in relays are not included with the relays and must be ordered separately. As of 1982, new mounting bases are available having new part numbers (see RSE-4G1). The catalog sections that follow may not reflect these new part numbers. If the old part number is known, the part number for the equivalent base can be found in Table 1 of RSE-4G1.

The mounting bases are arranged to be permanently fastened to horizontal supporting bars. Circuit connections to the receptacle terminals at the rear of each mounting base are of the solderless type (standard) which will accept one or two #14/#16 AWG wires independently. The front testing test plug (J772383) is used for insertion and removal of receptacles.

LINE CIRCUIT APPLICATIONS

The figure below illustrates one end of a reversible polarized line circuit in which three PN-150 relays are used (PN-150B, PN-150BD, PN-150BSR).

The PN-150B fulfills the requirements for a biased relay needed in the application.

The PN-150BD is a three position dc relay which combines the features of two biased relays, oppositely connected, in one structure.

The PN-150BSR is a slow dropaway relay which bridges the reversal of the PN-150BD.

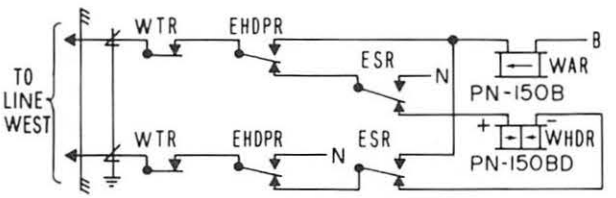

HD LINE CONTROL CIRCUIT

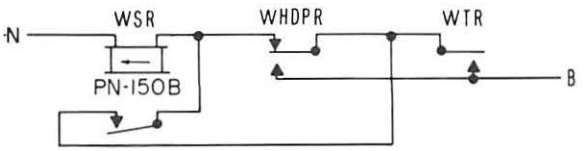

DIRECTIONAL STICK CONTROL

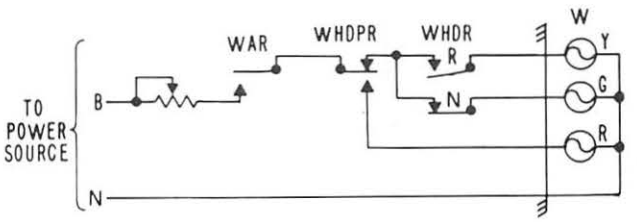

SIGNAL LAMP CIRCUIT

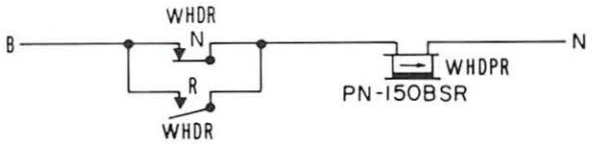

REPEATER CIRCUIT

SIGNAL CIRCUIT FOR SIGNALING WESTBOUND TRAIN ON EAST-WEST TRACK

TRACK CIRCUIT APPLICATIONS

PN-150BTR track relay, standardized with a 1-ohm coil, may be used in track circuits with the approximate maximum lengths as shown below in Table I.

A PN-150BTR track relay with a 4-ohm coil is also available for use in short primary battery track circuits.

Track lengths shown in the tabulation below are approximate and apply only to circuits energized from the power sources listed in Table II.

TABLE I
TRACK CIRCUIT LENGTHS

TYPE TRACK CIRCUIT	BALLAST RESISTANCE OHMS per M'	APPROX. MAX. LENGTH (FT)
END FED DC	3	4000
	5	6000
CENTER FED DC	3	8000
	5	12000
AC-DC. AC FEED. FULL WAVE RECTIFIER AT RELAY END	3	2000
	5	3000
AC-DC. AC FEED RELAY at TRANSFORMER END. HALF WAVE RECTIFIER at OPPOSITE END.	3	4000
	5	6000
END FED DC with PN-150B MULTIPLE APPROACH RELAY	3	4000
	5	6000

TABLE II
POWER SUPPLIES

	MAX. LEAD RESISTANCE (OHMS)
Caustic Soda Primary Battery	0.25
Air Cell Primary Battery	0.8
Nickel Storage Battery	0.8
Lead Storage Battery	0.8
Constant Potential Rectifier	0.8

INDEXING

Relays are equipped with indexing pins to prevent the insertion of an incorrect relay into the mounting base. Each relay is accompanied by an indexing plate which is applied to the base at the initial installation. A typical plug-in relay with indexing pins and corresponding base with indexing plate are shown below.

TESTING

Testing may be accomplished through the rear of the relay mounting base without opening a contact or coil circuit and through the front on relays equipped with front testing facilities. For tools utilized in installation and testing of PN-150 and PN-250 relays, refer to pages 7 and 8. For adjustment and maintenance tools, refer to Catalog Section RSE-18, "TOOLS".

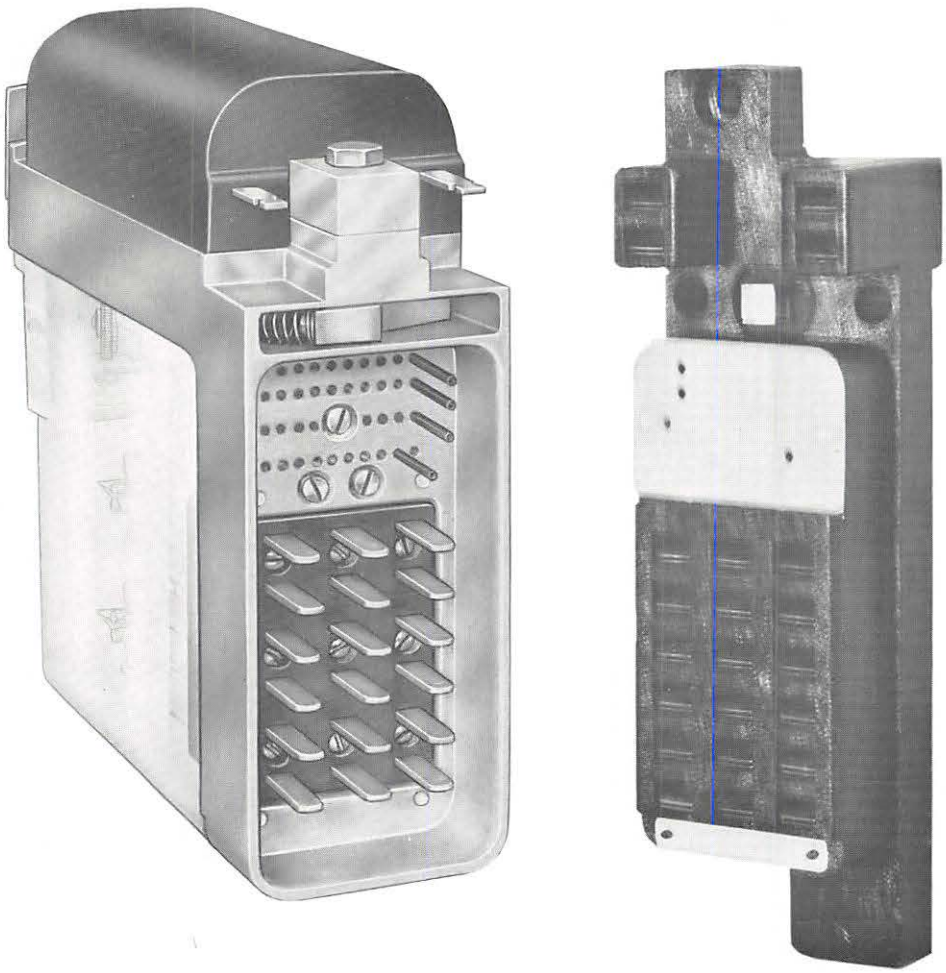

TYPICAL PLUG-IN RELAY SHOWING INDEXING PINS AND MOUNTING BASE ON RIGHT.

MOUNTING ARRANGEMENTS

Typical mounting arrangement of plug-in relays installed on Universal Equipment Racks and Style RS Sheet Steel Equipment Cases are illustrated in the following two figures. For details on racks and cases used with plug-in relays, refer to Catalog Section RSE-9 "HOUSINGS, CASES, AND JUNCTION BOXES".

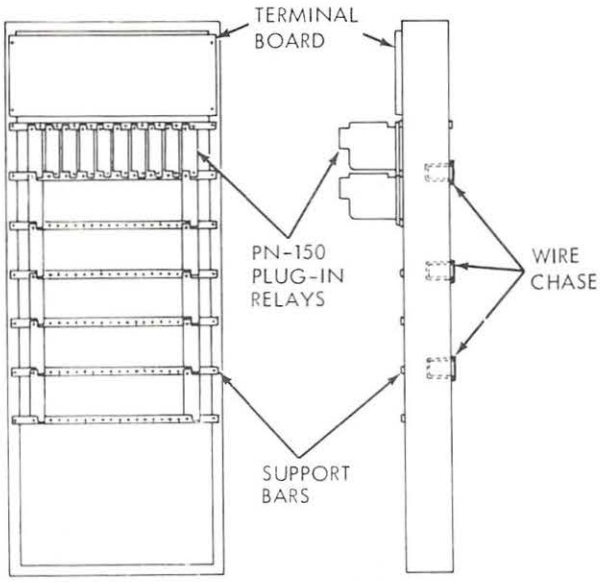

TYPICAL ARRANGEMENT OF PN-150 RELAYS ON UNIVERSAL EQUIPMENT RACK

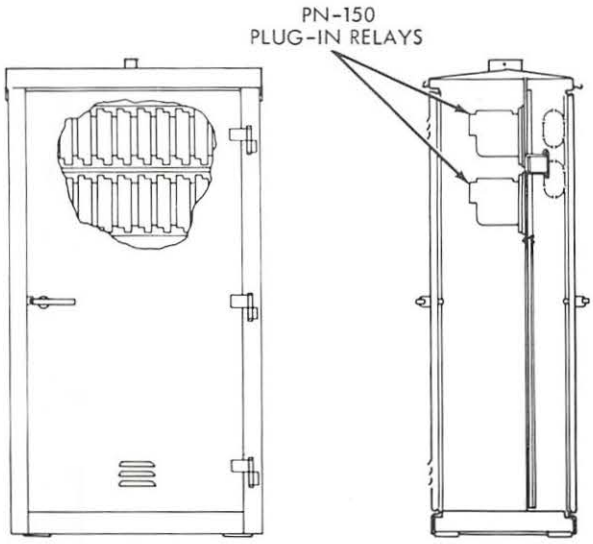

TYPICAL ARRANGEMENT OF PN-150 RELAYS IN STYLE CS-II EQUIPMENT CASE.

The plug-in relays may be mounted in equipment cases, on universal equipment racks, or at locations adaptable to the standard mounting bases. Vertical dimensions of the mounting bases are shown below.

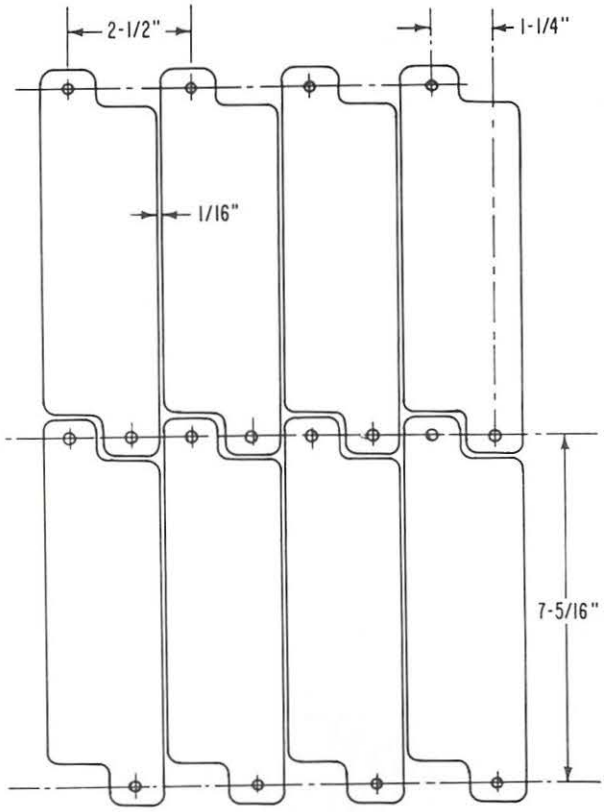

VERTICAL RACK MOUNTING DIMENSIONS OF PN-150 RELAYS

SHELF MOUNTING BRACKETS

US&S offers shelf mounting brackets for individually mounting PN-150 and PN-250 relays in equipment cases. These brackets can be used when modifying an existing signal system to save shelf space. Many of the plug-in relays, such as the PN-150T Time Element Relay, have improved characteristics which justify their use in installations that are predominantly shelf type relays.

Two sizes of brackets are available, one for a single PN-150 relay, and the second of double size width, suitable for a single PN-250 or two PN-150 relays. Brackets can be purchased with or without terminal blocks. The single bracket has 3 terminals and the double bracket has 6 terminals, when furnished.

The bracket is a welded assembly and uses weld nuts where the mounting base screws enter the bracket. Black wrinkle finish is standard.

Holes in the base permit the bracket to be fastened to the shelf by means of screws. The two screws at the front of the base can be removed with the relay plugged-in, while the "button hole" design of the rear hole permits removing the bracket without removing the rear screw.

FEATURES

- Saves shelf space when modifying existing signal systems.
- Simple and functional design.
- Optional terminal block permits relay control or other circuit to be opened from the front of the relay.
- Assembly can be turned around easily for access to the connections at the rear.
- Nylon cable clamp holds wire in position without stress on the receptacle springs.

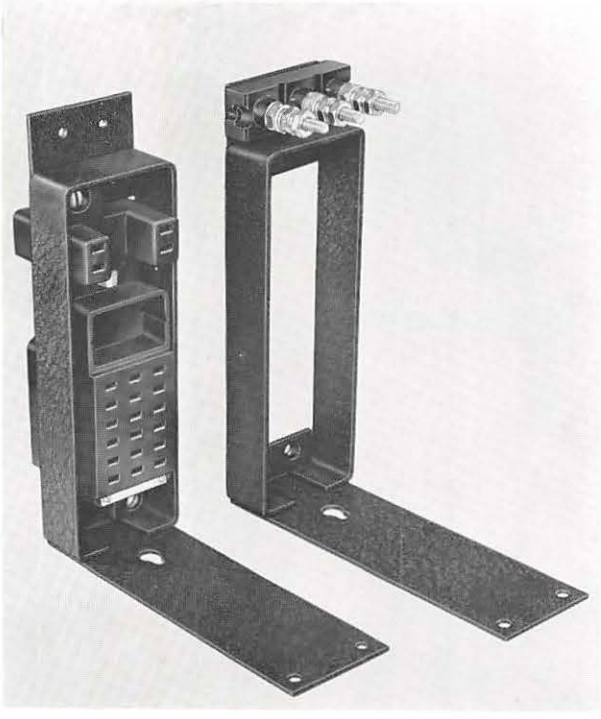

Height	Width	Depth
9-11/16"	2-13/16"	8"

SINGLE WIDTH SHELF MOUNTING BRACKETS

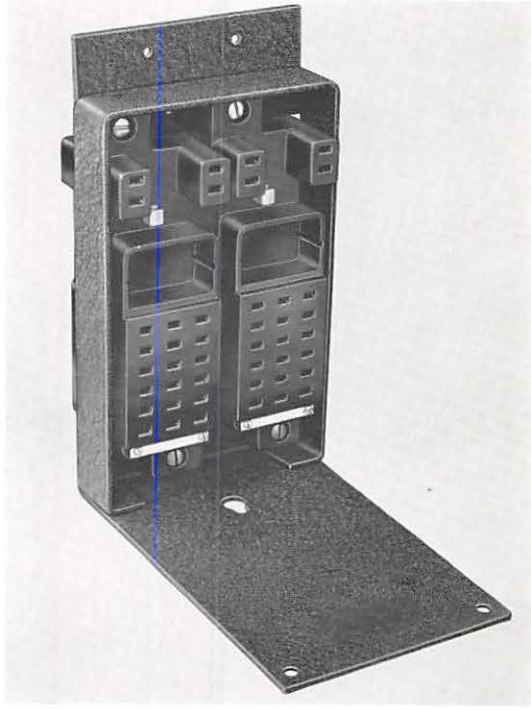

Height	Width	Depth
9-11/16"	5-5/16"	8"

DOUBLE WIDTH SHELF MOUNTING BRACKET

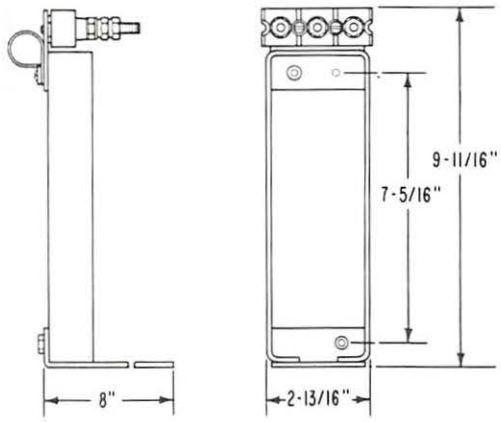

SHELF MOUNTING BRACKET for SINGLE WIDTH RELAYS

PART NO.	DESCRIPTION
N373826	SHELF MOUNTING BRACKET with 3-Terminal Block, for Single PN-150 Relay.
N373904	SHELF MOUNTING BRACKET without Terminal Block, for Single PN-150 Relay.

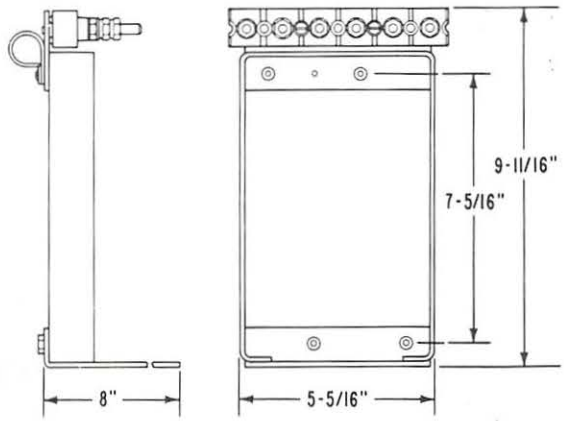

SHELF MOUNTING BRACKET for 2 SINGLE WIDTHS OR 1 DOUBLE WIDTH RELAY

PART NO.	DESCRIPTION
N373828	SHELF MOUNTING BRACKET with 6-Terminal Block, for one PN-250 or two PN-150 Relays.
N373914	SHELF MOUNTING BRACKET without Terminal Block, for one PN-250 or two PN-150 Relays.

RECEPTACLE CONTACT SPRINGS

Mounting bases are shipped with a full complement of contact springs for AWG #14/#16 wire. Contact springs for AWG #10/#12 and #18/#20 wire are also available. Determine your requirements and order from the tabulation.

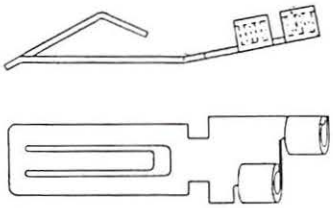

AWG WIRE SIZE	CONTACT SPRING
#14 / #16	J680195-0001
#10 / #12	J680195-0002
#18 / #20	J680195
	M451142 - 2703

RELAY TEST PLUGS

Test plugs have been designed to enable testing of PN-150 and PN250 relays while in service without disturbing the relay or wiring. The test plug used for front testing is also used for removing and inserting the receptacle contact springs.

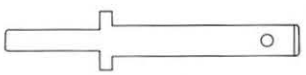

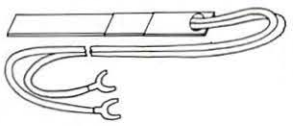

PART NO.	DESCRIPTION	PART NO.	DESCRIPTION
J772383 OLD TYPE J677931	FRONT TESTING TEST PLUG	N322965	BACK TESTING TEST PLUG

SHELF MOUNTING FRAME

A shelf-mounted frame for plug-in relays is also available. The frame is 36″ wide, 11″ high and 8″ deep and will fit into any standard case 3′ 3-½″ or larger. It will accept up to 13 PN-150 relay bases or 6 PN-250 relay bases, or a combination of the above sizes. Only two mounting holes are required in the shelf for each end bracket of the frame. The mounting frame is more economical than single units and lends itself to factory or shop wiring of new plug-in units to provide an economical changeover from shelf to plug-in relays.

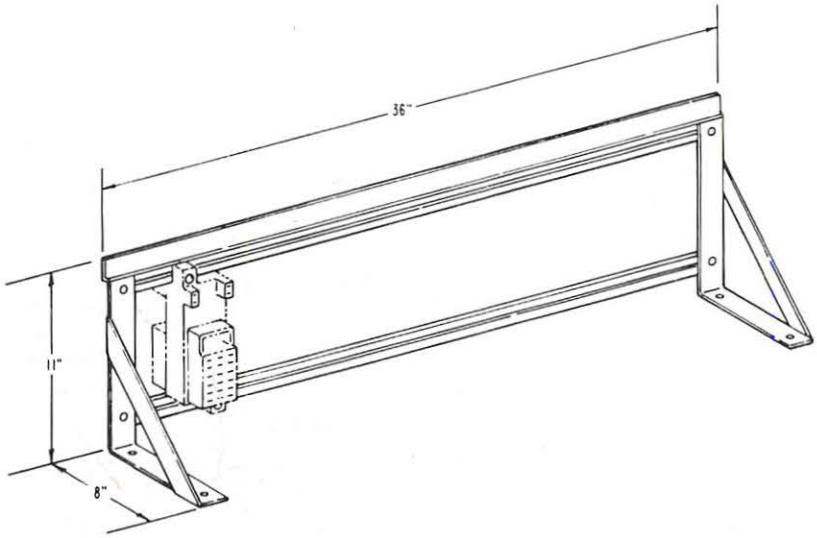

PART NO.	DESCRIPTION
N436182-001	SHELF MOUNTING FRAME with 36 AAR terminals mounted above plug-in base.
N436182	SHELF MOUNTING FRAME without AAR terminals.

CRIMPING TOOLS

US&S offers standard crimping tools for various wire sizes for crimping PN-150 and PN-250 relay receptacle contact springs. Order the crimping tools by part number from the tabulation. To aid in identification specify the appropriate wire size along with the part number when ordering.

CRIMPING TOOL PART NO.	AWG. WIRE SIZE	OLD STYLE RECP. CON. SPR.	NEW DESIGN RECP. CON. SPR.
J397139	#14/#16	J680165	J680195-0001*
J397138	#10/#12	J680181	J680195-0002
J397188	#18/#20	J680179	J680195

*Relay bases are shipped with these receptacle springs as standard.

VITAL PLUG-IN DC LINE RELAYS (Biased Type)

PN-150B
PN-150BD

PN-150HD
PN-250B

This catalog section covers biased type DC relays which include PN-150B, PN-150BD, PN-150HD and PN-250B.

The PN-150B and PN-240B are standard biased relays. The PN-250B relay is similar to the PN-150B but is double the width.

The PN-150BD is a special three-positioned biased relay. The PN-150HD has heavy duty contacts.

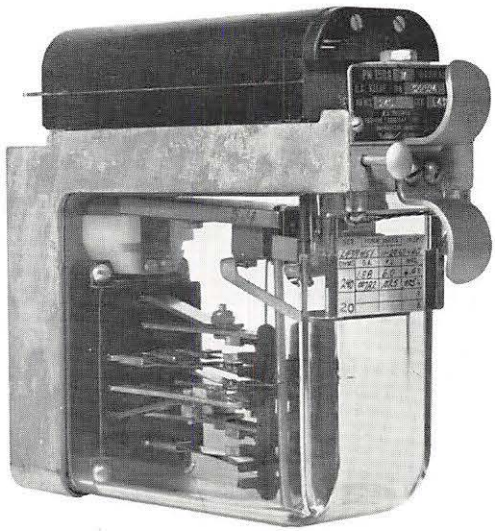

PN-150B RELAY

ORDERING INFORMATION

Order the relays described in this catalog section by part number from the tabulations given beneath each description. To aid in identification, specify the contacts and coil resistance along with the part number when ordering.

A mounting base is required for each relay and must be ordered by part number. The mounting base required for each relay is listed or noted below each tabulation. When ordering the mounting base, specify the relay with which it is to be used. For details on mounting plug-in relays, such as rack dimensions, etc., refer to Catalog Section RSE-4.

Front testing facility, which is a means for opening the coil circuit during system check-out or reading current without disturbing the relay or its wiring, is available on some relays listed in this catalog section. These relays are noted in the individual tabulations.

Energization values given for each relay are the values that the relay will beome energized, but generally response will occur at some lower value.

NOTE: For detail parts and additional information refer to service manuals: SM4551-N (PN-150), SM4551-D (PN-150BD), SM4551-B (PN-150HD), SM4597 (PN-250B).

PN-150B RELAY

The PN-150B biased relay has been designed for use in line and logic circuits requiring contact capacities up to 4 amperes. If greater capacity is required, see the PN-150HD relay. If an equivalent relay with more contacts is required, see the PN-250B relay.

Because the relay is naturally biased, it becomes a battery-checking relay to ensure that the logic energy is of the proper polarity. This is especially important where some of the circuits are polarity responsive, such as switch repeating and polar line circuits. If response to both polarities is required, see the PN 150N relay. For a relay with lower energization values, see the PN-150BE relay.

PART NO.				ENERGIZATION		
WITH FRONT TESTING	NO FRONT TESTING	CONTACTS	COIL RESIS. OHMS	AMPS	DC VOLTS	SYSTEM VOLTAGE
N322500 -706		6FB Std.	25	0.0504	1.26	*
N322500 -704		6FB Std.	100	0.0264	2.64	*
N322500 -705		6FB Std.	240	0.0177	4.24	*
N322500 -701	-801	6FB Std.	400	0.0132	5.3	10
N322500 -702	-802	6FB Std.	800	0.0105	8.4	12-14
N322500 -703	-803	6FB Std.	1000	0.0082	10.7	16-24
N322500	-809	4FB, 2F, 1B Std.	400	0.0132	5.3	10
N322500	-808	4FB, 2F, 1B Std.	800	0.0105	8.4	12-14
N322500	-807	4FB, 2F, 1B Std.	1300	0.0082	10.7	16-24
N322500	-810	6FB Std.	4300	0.0040	17.58	24
N322500 -711		2FB, 4F Std., 4B S.I.C.	400	0.0132	5.3	10

*Normally used in series with another relay.
All relays have Lexan® covers.

CONTACTS — standard low voltage silver to silver-impregnated carbon front and silver to silver back.

MOUNTING BASE — N451376-0302 (Used for all relays listed in the above tabulation.)

PN-150BD RELAY

The PN-150BD Relay is a three-position relay which is a combination of two biased relays to sense that a circuit is a.) deenergized, b.) energized with normal polarity, or c.) energized with reverse polarity. Each applied polarity energizes one of the biased armatures which actuates three transfer contacts. Since a polarity change causes one set of front contacts to open before the other set closes, there is a short period when neither set is closed. Generally, a PN-150BSR Relay is used as a repeater to bridge the changeover when a continuous "circuit energized" output is required.

PART NO.		CONTACTS		COIL RSIS. OHMS	ENERGIZATION		REC'MND. WORKING VOLT. FOR 0.9 SEC. REVERSAL TIME	SYSTEM VOLTAGE
WITH FRONT TESTING	NO FRONT TESTING	NORMAL	REVERSE		AMPS.	DC VOLTS		
N322504-702		3FB Std.	3FB Std,	100	0.0283	2.83	3.05	*
N322504-701		3FB Std.	3FB Std.	400	0.0141	5.65	6.08	10
N322504-703	-803	3FB Std.	3FB Std.	800	0.0112	8.95	9.67	12-14
N322504-704		3FB Std.	3FB Std.	25	0.054	1.35	1.46	

*Normally used in series with another relay.

Contact Assignments -

Contact Number	Contact Type
1,4,5	FB Normal
2,3,6	FB Reverse

CONTACTS — standard low voltage silver to silver-impregnated carbon front and silver to silver back.

MOUNTING BASE — N451376-0302 (Used for all relays listed in the above tabulation.)

PN-150HD RELAY

The PN-150HD Relay has six transfer contacts, four are heavy duty which can carry 15 amperes up to 30 volts dc and ac. The other two contacts are standard contacts with a 4-ampere capacity. This relay can be used in place of a PN-150B Relay when greater contact capacity is required. The PN-150HD requires the indicated polarity for its operation. However, due to the high back contact pressure, it cannot be considered a biased relay in accordance with AAR specifications.

PART NO.		CONTACTS	COIL RSIS. OHMS	ENERGIZATION		SYSTEM VOLTAGE
WITH FRONT TESTING	NO FRONT TESTING			AMPS.	VOLTS (DC)	
N322505-701		4FB H.D. 2FB Std.	400	0.0132	5.3	**10**
N322505-702		4FB H.D 2FB Std.	800	0.0105	8.4	**12-14**
N322505	-803	4FB H.D. 2FB Std.	1300	0.0082	10.7	16-24

CONTACTS — (H.D.) heavy duty silver to silver-impregnated carbon front and silver to silver back.
(Std.) standard low voltage silver to silver-impregnated carbon front and silver to silver back.

Contact Assignments -

Contact Number	Contact Type
1, 3, 4, 6	FB H.D.
2, 5	FB Std.

All relays have Lexan® covers.

MOUNTING BASE — N451376-0302 (Used for all relays in the above tabulation)

PN-250B RELAY

The PN-250B Relay is a biased relay for use in line and logic circuits. It is used in place of a PN-150B Relay when additional contacts are required. Coils of this relay may be externally connected in series or in multiple. For a relay which operates on lower energization values, see the PN-250BE Relay (RSE-4E3).

PART NO.		CONTACTS	COIL RESIS. OHMS		ENERGIZATION		SYSTEM VOLTAGE
WITH FRONT TESTING	NO FRONT TESTING		SERIES	MULTIPLE	AMPS.	VOLTS (DC)	
N322554 –701	–801	6FB, 6F, 3B Std.	1000		0.0104	10.43	16-24
				250	0.0209	5.22	10-14
N322554 –702	–802	8FB, 4F, 2B Std.	1000		0.0104	10.43	16-24
				250	0.0209	5.22	10-14

CONTACTS — standard low voltage silver to silver impregnated carbon front and silver to silver back.

All relays have Lexan® covers.

MOUNTING BASE — N438689-003
(Used for all relays in the above tabulation)

Contact Assignments -

Relay	Contact Number	Contact Type
N322554-701, 801	1-6	FB
	7-12	F
	13-15	B
N322554-702, 802	1, 3, 4, 6, 8, 10, 11, 13	FB
	2, 7, 9, 14	F
	5, 12	B

VITAL PLUG-IN DC LINE RELAYS
(Neutral Type)

PN-150N

The PN-150N is a neutral dc relay designed for line circuit applications requiring relays that respond to current of either polarity.

PN-150N RELAY

ORDERING INFORMATION

Order the relays described in this catalog section by part number from the tabulations given beneath each description. To aid in identification, specify the contacts and coil resistance along with the part number when ordering.

A mounting base is required for each relay and must be ordered separately. The mounting base required for each relay is noted below the tabuation. When ordering the mounting base specify the relay with which it is to be used. For details on mounting plug-in relays, such as rack dimensions, etc., refer to Catalog Section RSE-4.

Front-testing facility, which is a means for opening the coil circuit during system check out or reading current without disturbing the relay or its wiring, is available on all relays listed in this catalog section.

Energization values given for this relay are the values that the relay will become energized, but generally response will occur at some lower value.

NOTE: For detail parts and additional information, refer to Service Manual SM4596-X

PN-150N RELAY

The PN-150N Relay is a neutral relay designed for use in line and logic circuits which require response to energy of either polarity. If this is not a requirement, PN-150B Relay should be used. If a relay which operates on lower energization values is required, see the PN-150NE. (RSE-4E3)

PART NO. WITH FRONT TESTING	CONTACTS	COIL RESIS. OHMS	ENERGIZATION		SYSTEM VOLTAGE
			AMPS.	VOLTS (DC)	
N322502-701	6FB Std.	240	0.0191	4.6	*
N322502-702	6FB Std.	100	0.0285	2.85	
N322502-703	6FB Std.	25	0.0545	1.36	

*Normally used in series with another relay.

CONTACTS - standard low voltage silver to silver-impregnated carbon front and silver to silver back.

MOUNTING BASE -N451376-0302

VITAL PLUG-IN DC LINE RELAYS
(Slow Dropaway and/or Slow Pickup)

PN-150BSR **PN-258BSR** **PN-259BSR**

PN-258B **PN-259SRA**

The relays covered in this catalog section are biased relays that exhibit slow dropaway and/or slow pickup characteristics.

The PN-150BSR, PN-259BSR and PN-259SRA are slow dropaway relays.

PN-258BSR Relay exhibits both slow dropaway and pickup characteristics. The PN-258B Relay has the slow pickup feature only.

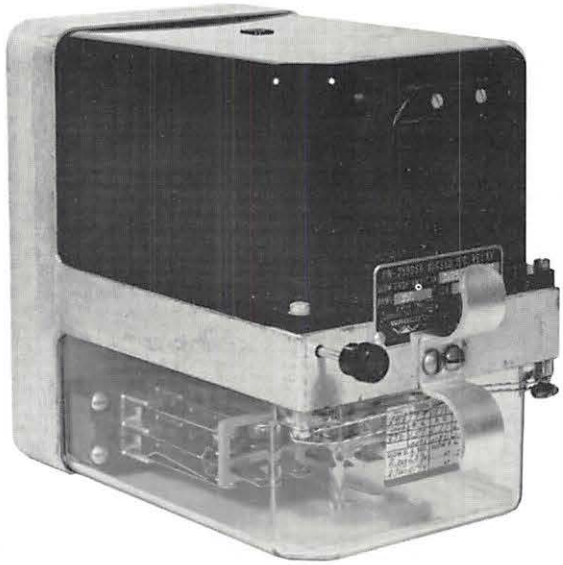

PN-259BSR RELAY

ORDERING INFORMATION

Order the relays described in this catalog section by part number from the tabulations given beneath each description. To aid in identification, specify the contacts and coil resistance along with the part number when ordering.

A mounting base is required for each relay and must be ordered separately. The mounting base required for each relay is noted below the tabuation. When ordering the mounting base specify the relay with which it is to be used. For details on mounting plug-in relays, such as rack dimensions, etc., refer to Catalog Section RSE-4.

Front-testing facility, which is a means for opening the coil circuit during system check out or reading current without disturbing the relay or its wiring, is available on some of the relays listed in this catalog section. These relays are noted in the tabulations.

Energization values given for this relay are the values that the relay will become energized, but generally response will occur at some lower value.

NOTE: For detail parts and additional information, refer to Service Manuals SM4596-B (PN-150BSR), SM4597 (PN-258B) (PN-258BSR) (PN-259BSR), and SM4563-H (PN-259SRA).

PN-150BSR RELAY

The PN-150BSR Relay is a slow release biased relay which remains in the energized position for approximately 1 second after control energy is removed. This feature is used to bridge the transfer time of controlling relay contacts to prevent a loss of information. A typical example is the bridging of the changeover time of a PN-150BD Relay from normal to reverse (or vice-versa). For longer delay time, see the PN-259BSR and PN-259SRA Relays.

PART NO.									
	NO FRONT TESTING	WITH FRONT TESTING	CONTACTS	COIL RESIS. OHMS	ENERGIZATION AMPS.	ENERGIZATION VOLTS	MIN. D.A. TIME 0.8 SEC. AT VOLTS	MIN. D.A. TIME 1.0 SEC. AT VOLTS	SYSTEM VOLTAGE
N322503		–701	6FB Std.	100	0.0345	3.45	4.65	5.56	10
N322503	—802	–702	6FB Std.	250	0.0223	5.58	7.51	9.0	12-16
N322503	—804		4FB, 2F, 1B Std.	250	0.0223	5.58	7.51	9.0	12-16

CONTACTS - standard low voltage silver to silver-impregnated carbon front and silver to silver back.

MOUNTING BASE -N451376-0302

CONTACT ASSIGNMENTS-

Arrangement	Contact Number	Type
6FB	1-6	FB
4FB, 2F, 1B	1, 3, 4, 6	FB
	2, 7	F
	5	B

PN-258B RELAY

The PN-258B Relay is a slow pick biased relay which has a delayed response to energization of approximately 1 second, depending on the voltage applied. The release is the same as a standard relay.

In the table below, the energization values are the values below which the relay may not become energized. The service energization volts is the voltage recommended in order to ensure a 1 second delay.

PART NO.										
	NO FRONT TESTING	WITH FRONT TESTING	CONTACTS	COIL RESIS. OHMS	ENERGIZATION AMPS.	ENERGIZATION VOLTS (DC)	SERVICE ENERGIZATION VOLTS	MIN. P.U. TIME (SEC.) AT 100% SERVICE ENER.	MIN. P.U. TIME (SEC.) AT 110% SERVICE ENER.	SYSTEM VOLTAGE
N322551		–701	6FB Std.	1400	0.0055	7.5	10.0	1.05	0.85	10
N322551	—803	–703	6FB Std.	2000	0.0045	9.0	12.0	1.05	0.85	12
N322551		–704	6FB Std.	3000	0.0038	11.3	15.2	1.05	0.85	16

CONTACTS - standard low voltage silver to silver-impregnated carbon front and silver to silver back.

MOUNTING BASE -N438689-001

PN-258BSR

The PN-258BSR Relay is a slow pickup and slow release biased relay. The delayed response to energization is approximately 2 seconds and to deenergization approximately 1 second. As can be seen in the tabulation below, these times will vary with the applied voltage.

The energization values are the values below which the relay may not become energized. The service energization volts is the voltage recommended at the relay to obtain the proper pickup and release time delays.

PART NO. WITH FRONT TESTING	CONTACT	COIL RESIS. OHMS	ENERGIZATION AMPS	ENERGIZATION VOLTS (DC)	SERVICE ENERGIZATION VOLTS	TIMING CHARACTERISTICS MIN. P.U TIME (SEC.) AT 100% SERVICE ENER.	MIN. P.U TIME (SEC.) AT 110% SERVICE ENER.	MIN. D.A. TIME (SEC.) AT 100% SERVICE ENER.	MIN. D.A. TIME (SEC.) AT 75% SERVICE ENER.
N322551-702	6FB Std.	350	0.0214	7.5	10.0	2.2	1.8	1.1	0.7
N322551-705	6FB Std.	500	0.018	9.01					

CONTACTS - standard low voltage silver to silver-impregnated carbon front and silver to silver back.

MOUNTING BASE -N438689-001

PN-259BSR and PN-259SRA RELAYS

The PN-259BSR Relay is a slow release biased relay which has a delayed response to deenergization of 2.75 to 3.5 seconds. This relay is equipped with six standard transfer (FB) contacts capable of carrying up to 4 amperes.

The PN-259SRA Relay is a special version of the PN-259BSR Relay with four heavy duty transfer contacts capable of carrying up to 15 amperes. This relay has been designed for delaying the release of highway crossing gates although it is not restricted to that purpose.

When either of the above relays is used for grade crossing gate delay, its control should be arranged to snub its coil upon deenergization

TYPE	PART NO WITH FRONT TESTING	CONTACTS	COIL RESIS. OHMS	ENERGIZATION AMPS.	ENERGIZATION VOLTS (DC)	SVC. ENERGIZATION FOR 2.75 to 3.5 SEC. DROPAWAY TIME AMPS.	SVC. ENERGIZATION FOR 2.75 to 3.5 SEC. DROPAWAY TIME VOLTS	SYSTEM VOLTAGE
PN-259SRA	N322562-001	4FB H.D.	225	0.0222	5.0	0.0355	8.0	12
PN-259BSR	N322552-702	6FB Std.	225	0.0222	5.0	0.0355	8.0	12
PN-259BSR	*N322552-701	6FB Std.	350	0.0186	6.51	0.0298	10.4	10

*Not recommended for grade crossing gate delay.

CONTACTS - (H.D.) heavy duty silver to silver-impregnated carbon front and silver to silver back.
- (Std.) standard low voltage silver to silver-impregnated carbon front and silver to silver back.

MOUNTING BASE - N438689-001

VITAL PLUG-IN DC LINE RELAY
(Magnetic Stick)

PP-151

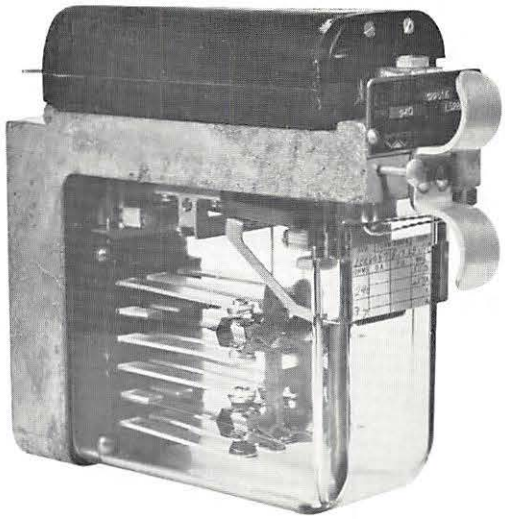

This catalog section covers the PP-151 line magnetic stick relay.

ORDERING INFORMATION

Order the relays described in this catalog section by part number from the tabulations given beneath each description. To aid in identification, specify the contacts and coil resistance along with the part number when ordering.

A mounting base is required for each relay and must be ordered separately. The mounting base required for each relay is noted below the tabulation. When ordering the mounting base specify the relay with which it is to be used. For details on mounting plug-in relays, such as rack dimensions, etc., refer to Catalog Section RSE-4.

Front-testing facility, which is a means for opening the coil circuit during system check out or reading current without disturbing the relay or its wiring, is available on all relays listed in this catalog section.

Energization values given for this relay are the values that the relay will become energized, but generally response will occur at some lower value.

NOTE: For detail parts and additional information, refer to Service Manual SM4596-G

PP-151 RELAY

The PP-151 Relay is a magnetic stick relay which stays in the last operated position after control energy is removed. Full contact pressure is maintained during deenergization to ensure circuit continuity. This relay is designed for use in polar circuits where the last position must be retained on loss of power.

PART NO. WITH FRONT TESTING	CONTACTS	COIL RESIS. OHMS	ENERGIZATION		SYSTEM VOLTAGE
			AMPS.	VOLTS (DC)	
N322507-701	6NR S.I.C.	240	0.023	5.52	10
N322507-703	6NR S.I.C.	25	0.062	1.54	*
N322516-701	4NR S.I.C. 2NR Sil. to Sil.	240	0.023	5.52	**10**
N438007-702	6NR S.I.C.	400	0.0172	6.85	**10-14**

CONTACTS - S.I.C. silver to silver-impregnated carbon normal and reverse.
Silver to silver contacts for switch machine control.

MOUNTING BASE - N451376-0302

All relays have Lexan® covers

***Normally used in series with other relays.**

VITAL PLUG-IN DC LINE RELAYS
(Magnetic Blowout Type)

PN-150BM

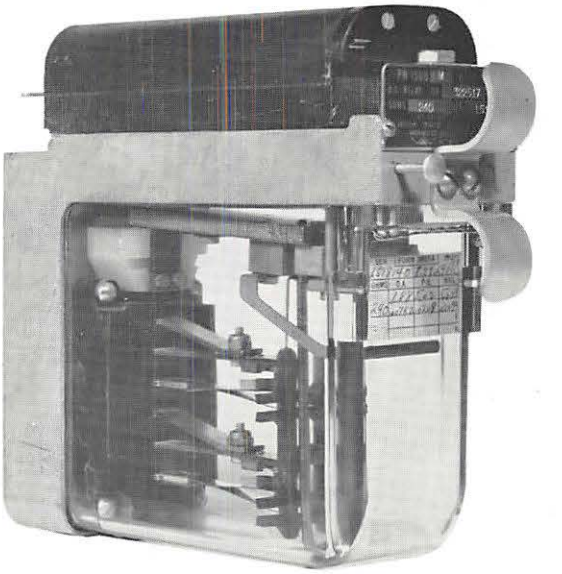

This catalog section covers the PN-150BM Relay with heavy duty magnetic blow-out contacts for switch control application.

ORDERING INFORMATION

Order the relays described in this catalog section by part number from the tabulations given beneath each description. To aid in identification, specify the contacts and coil resistance along with the part number when ordering.

A mounting base is required for each relay and must be ordered separately. The mounting base required for each relay is noted below the tabulation. When ordering the mounting base specify the relay with which it is to be used. For details on mounting plug-in relays, such as rack dimensions, etc., refer to Catalog Section RSE-4.

Front-testing facility, which is a means for opening the coil circuit during system check out or reading current without disturbing the relay or its wiring, is available on all relays listed in this catalog section.

Energization values given for this relay are the values that the relay will become energized, but generally response will occur at some lower value.

NOTE: For detail parts and additional information, refer to Service Manual SM4551-M

PN-150BM RELAY

The PN-150BM Relay is a biased relay which has contacts equipped with magnetic blowouts. These contacts can carry 15 amperes up to 125 volts dc or 300 volts ac and can break currents up to 50 amperes. This relay is used in conjunction with the PP-151 and PN-150SO Relays to control electric switch machines.

PART NO. WITH FRONT TESTING	CONTACTS	COIL RESIS. OHMS	ENERGIZATION		SYSTEM VOLTAGE
			AMPS.	VOLTS.	
N322517-001	2F, Mag. H.D.	240	0.0209	5.02	10-16
N322524-001	2F, 2B Mag. H.D.	240	0.025	6.0	10-16
N322525-001	3F, Mag. H.D.	240	0.025	6.0	10-16

All relays have Lexan® covers

CONTACTS - magnetic heavy duty with silver to silver-impregnated carbon front and silver to silver back.

MOUNTING BASE -N451376-0302

CONTACT ASSIGNMENTS -

Arrangement	Number	Contact Type
2F	1,2	F circuit Fronts toward + battery
3F	1, 2, 3	F circuit Fronts toward + battery
2F, 2B	1, 2	F } circuit Heels toward + battery
	3, 4	B } circuit Heels toward + battery

VITAL PLUG-IN DC TRACK RELAYS
(Biased - Ordinary Acting - High Dropaway)

PN-150BTR PN-150BQS PN-150BH

The PN-150BTR, PN-150BQS and PN-150BH Relays are dc track relays. The PN-150BTR is an ordinary acting biased relay.

The PN-150BQS and 150BH are high dropaway biased relays with the PN-150BQS having additional quick shunting characteristics.

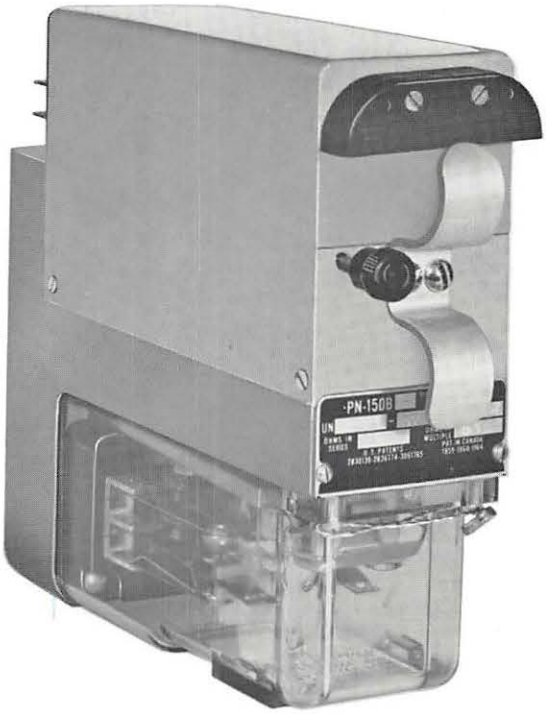

PN-150BH RELAY

ORDERING INFORMATION

Order the relays described in this catalog section by part number from the tabulations given beneath each description. To aid in identification, specify the contacts and coil resistance along with the part number when ordering.

A mounting base is required for each relay and must be ordered separately. The mounting base required for each relay is noted below the tabuation. When ordering the mounting base specify the relay with which it is to be used. For details on mounting plug-in relays, such as rack dimensions, etc., refer to Catalog Section RSE-4.

Front-testing facility, which is a means for opening the coil circuit during system check out or reading current without disturbing the relay or its wiring, is available on some of the relays listed in this catalog section. These relays are noted in the tabulations.

Energization values given for this relay are the values that the relay will become energized, but generally response will occur at some lower value.

NOTE: For detail parts and additional information, refer to Service Manuals SM4596-A (PN-150BTR), SM4551-R (PN-150BH).

PRINTED IN U.S.A.

UNION SWITCH & SIGNAL DIVISION
AMERICAN STANDARD INC. / SWISSVALE, PA 15218

RSE-4B1
REV. 7/84

PN-150BTR and PN-150BQS RELAYS

The PN-150BTR Relay is a biased relay which has been designed with special characteristics for use as a track relay. External resistors may be required to adjust each track circuit to obtain proper train-shunting characteristics. Also, see the PN-150BH relays.

The PN-150BQS Relay is a special quick shunting relay designed for use with the FRHI-SHUNT Track Unit. This apparatus is used where poor shunting characteristics exist, such as, film on the rail as in classification yards. The high resistance winding is externally snubbed with a diode to provide increased immunity to intermittent loss of shunt.

PART NO.					MINIMUM D.A.		ENERGIZATION	
	NO FRONT TESTING	WITH FRONT TESTING	CONTACTS	COIL RESIS. OHMS	AMPS.	VOLTS (DC)	AMPS.	VOLTS
N322501	-801	-701	6FB Std.	1	0.132	0.132	0.250	0.250
N322501	-802	-702	6FB Std.	4	0.069	0.276	0.131	0.52
*N322501		-703	6FB Std.	11/25	0.097	1.07	0.180	1.98
N322501		-704	6FB Std.	2	0.091	0.182	0.173	0.35
N322501		-705	6FB Std.	13	0.037	0.39	0.071	0.92

*PN-150BQS only.

CONTACTS - standard low voltage silver to silver-impregnated carbon front and silver to silver back.

MOUNTING BASE - N451376-0302

PN-150BH RELAY

The PN-150BH Relay is a biased high dropaway relay designed for use in track circuits. It has the special characteristic of minimum release at about 75% of the energization value. This results in better shunting characteristics than can be obtained with the PN-150BTR relay.

In order to achieve the close tolerances indicated, a special contact arrangement of one transfer, one front, and one back contact has been used. If more contacts are required, a PN-150B relay can be used as a repeater.

PART NO. WITH FRONT TESTING	CONTACTS	COIL RESIS. OHMS		MINIMUM D.A. (NOT FULL D.A.)		ENERGIZATION	
		SERIES	MULTIPLE	AMPS.	VOLTS	AMPS.	VOLTS
N322511-001	1FB, 1F, 1B, Std	2		0.120	0.240	0.160	0.320
			0.5	0.240	0.120	0.320	0.160
N322511-002	1FB, 1F, 1B Std.	4		0.086	0.344	0.115	0.460
			1	0.172	0.172	0.230	0.230
**N322511-006	1FB, 1F, 1B Std.	400		0.0094	3.76	0.0126	5.03
*N322511-003	1FB 1F, 1B Std.	2000		0.0045	9.05	0.0060	12.1
			500	0.0090	4.52	0.0121	6.05
***N322511-005	1FB, 1F, 1B Std.	2.6		0.137	0.356	0.190	0.494
			0.65	0.274	0.178	0.380	0.247
****N322511-007	1FB, 1F, 1B Std.	400		0.0094	3.76	0.0119†	4.75†
						0.0126‡	5.03‡
N322511-008	1FB, 1F, 1B, Std.		0.125	0.525		0.703	
N322511-009	1FB, 1F, 1B, Std.		0.26	0.379		0.507	
N322511-010	1FB, 1F, 1B, Std.	6		0.072	0.432	0.097	0.578
			1.5	0.144	0.216	0.193	0.289
N322511-011	1FB, 1F, 1B, Std.	4		0.090	0.362	0.121	0.484
			1	0.181	0.181	0.242	0.242

*Special relay for use with AFO equipment, **Special relay for use with AFO-II equipment,
***Relay designed to be immune to ac. For use in electrified territory (with ac propulsion).
****Relay used for Motion Monitors. †Minimum values, ‡maximum values.

Contact Assignments -

Contact Number	Type
1	FB
2	B
3	F

CONTACTS - standard low voltage silver to silver-impregnated carbon front and silver to silver back.

MOUNTING BASE -N451376-0302

VITAL PLUG-IN AC TRACK RELAYS
(Two Element AC Vane)

PV-250

The PV-250 Relay is a two element ac vane relay used in track, line, power off, and ground detection circuits. As a track relay, it may be used in single or double rail circuits with dc electric propulsion.

Since it is a two element relay, it must be used with suitable apparatus to provide adequate displacement between the local and control (track) windings.

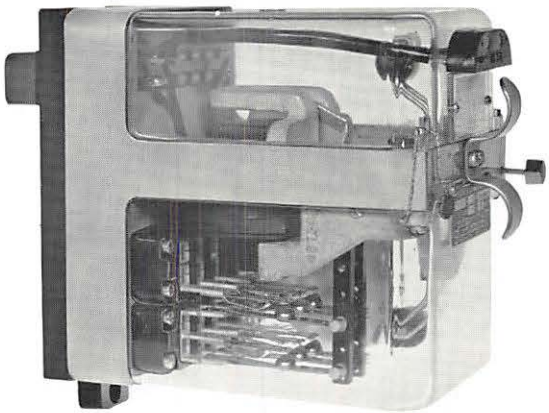

ORDERING INFORMATION

Order the relays described in this catalog section by part number from the tabulations given beneath each description. To aid in identification, specify the contacts and coil resistance along with the part number when ordering.

A mounting base is required for each relay and must be ordered separately. The mounting base required for each relay is noted below the tabuation. When ordering the mounting base specify the relay with which it is to be used. For details on mounting plug-in relays, such as rack dimensions, etc., refer to Catalog Section RSE-4.

Front-testing facility, which is a means for opening the coil circuit during system check out or reading current without disturbing the relay or its wiring, is available on some of the relays listed in this catalog section. These relays are noted in the tabulation.

Energization values given for this relay are the values that the relay will become energized, but generally response will occur at some lower value.

NOTE: For detail parts and additional information, refer to Service Manual SM4574.

PV-250 RELAY

ORDERING INFORMATION

Order the relays described below by part number. Relays are track relays unless otherwise noted. A mounting base is required for each relay and must also be ordered by part number. The part number is noted below the tabulation. The same mounting base is used for all relays in this tabulation. For details on mounting relays, such as rack dimensions, etc., see Catalog Section RSE-4.

PART NO.			CON-TACTS	MIN. D.A.	OPERATING VALUES AT IDEAL PHASE RELATIONS				LOCAL	
					P.U. ±5%		FULL STROKE			
	NO FRONT TESTING	WITH FRONT TESTING			AMPS.	VOLTS	AMPS.	VOLTS	VOLTAGE	Hz.
N322555	—801	—001	6F, 4B‡	80% P.U.	0.283	0.418	0.487	0.72	115	60
			‡‡	80% P.U.	0.566	0.209	0.974	0.36	115	60
			‡	80% P.U.	0.278	0.360	0.478	0.62	110	50
			‡‡	80% P.U.	0.566	0.180	0.956	0.31	110	50
N322555		—002	6F, 4B	80% P.U.	0.442	0.309	0.75	0.525	115	25
				80% P.U.	0.884	0.155	1.5	0.269	115	25
*N322555		—004	6F, 4B	91% P.U.	0.158	97.0	0.181	111.0	115	60
N322555		—010	6F, 4B‡‡	80% P.U.	0.51	0.3	0.77	0.43	115	100
**N322555	—805	—005	6F, 4B†	90% P.U.	0.115	3.67	0.160	5.10	115	60
N342555	—809		2F, 2B†	90% P.U.	0.044	2.74	0.0495	3.05	115	60
N342555	—811		2F, 2B†	90% P.U.	0.055	2.20	0.062	2.40	115	60
N342555	—812		2F, 2B†	90% P.U.	0.061	2.57	0.070	2.95	115	90
N342555	—813		2F, 2B	90% P.U.	0.075	3.14	0.086	3.59	90	83.3
N342555	—814		2F, 2B	90% P.U.	0.295	0.704	0.322	0.767	115	60
N342555	—803	—003	2F, 2B†	90% P.U.	0.28	0.70	0.327	0.82	115	60
***N322555		—008	6F, 4B	80% P.U.	0.137	78.0	0.159	92.0	115	60
				80% P.U.	0.153	76.0	0.182	90.0	110	60

*Power Off Relay **Ground Detector Relay ***Line Relay

Where two sets of data are given for a relay, the top set covers control windings in series and the bottom set control windings in parallel. For relays having only one set of data, the data are for control windings in series only.
†Single Coil ‡Control coils in series ‡‡Control coils in multiple

CONTACTS - standard low voltage silver to silver-impregnated carbon front and silver to silver back.

MOUNTING BASE - N438689-003

CONTACT ASSIGNMENTS - All —800 series relays in this section have Lexan® Covers.

10-Contact Relay

Number	Type
1,2,3,6,7,8	F
4,5,9,10	B

4-Contact Relay

Number	Type
7,8	F
9,10	B

(—003, —803, —814 only)

4-Contact Relay

Number	Type
2,3	F
7,8	B

VITAL PLUG-IN SWITCH CONTROL RELAYS
(DC Type)

PN-150SO PN-152SO

This catalog section covers, PN-150SO and PN-152SO Relays. Both relays are dc switch overload relays.

The PN-150SO Relay is for use with high and low voltage dc switch machines.

The PN-152SO Relay is for use with dc switch machines where the control circuit requires an overload relay with separate magnetic structures for the overload and stick functions.

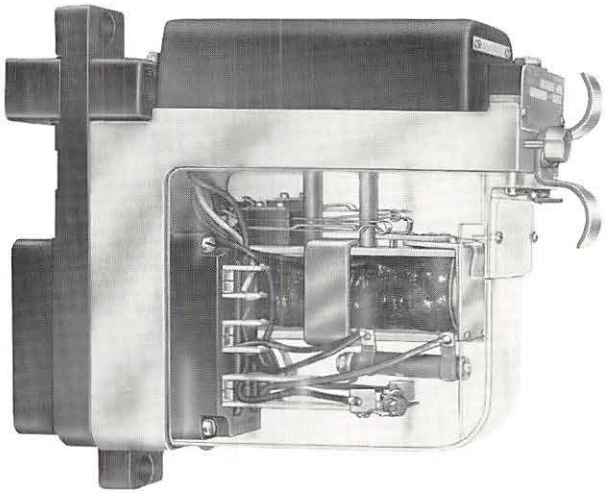

PN-150SO RELAY

ORDERING INFORMATION

Order the relays described in this catalog section by part number from the tabulations given beneath each description. To aid in identification, specify the contacts and coil resistance along with the part number when ordering.

A mounting base is required for each relay and must be ordered separately. The mounting base required for each relay is noted below the tabuation. When ordering the mounting base specify the relay with which it is to be used. For details on mounting plug-in relays, such as rack dimensions, etc., refer to Catalog Section RSE-4.

The relays listed in this catalog section are not equipped with front-testing facility.

Energization values given for this relay are the values that the relay will become energized, but generally response will occur at some lower value.

NOTE: For detail parts and additional information, refer to Service Manuals SM4571 (PN-150SO) and SM5929 (PN-152SO).

PN-150SO RELAY

The PN-150SO and PN-152SO Relays are overload relays, which are used in conjunction with a PN-150BM Relay to cut off power to a dc switch machine which has stalled. The motor current flows through the coil and when the operating time (as given in the tabulation) is exceeded the relay becomes energized. This opens the control circuit of the PN-150BM Relay which, in turn, cuts off power to the switch machine.

The circuit is arranged so that once the PN-150SO Relay is energized it will remain energized until the switch control is reversed. The PN-152SO Relay has both sets of coil leads available for external circuit arrangements.

PART NO. WITHOUT FRONT TESTING	COIL RESISTANCE INCLUDING RESISTOR (OHMS)		OPERATING TIME – SECONDS (±10%)@					
	OPERATING	STICK	4 AMPS.	5.5 AMPS.	8 AMPS.	12 AMPS.	15 AMPS.	20 AMPS.
N322512-001*	0.039	135	–	–	40.0	8.0	–	–
N322512-002**	0.0135	135	–	–	–	–	25.0	6.0

*For use with machine having clutch adjusted to slip at 12 amperes.

**For use with machine having clutch adjusted to slip at 20 amperes.

CONTACTS - are internally wired to accommodate the above circuitry. For more details contact US&S.

MOUNTING BASE - N451376-0302

PN-152SO RELAY

PART NO. WITHOUT FRONT TESTING	COIL RESISTANCE INCLUDING RESISTOR (OHMS)		OPERATING TIME – SECONDS (±10%)@	
	OPERATING	STICK	13 AMPS.	15 AMPS.
N322522-802	0.0298	750	5	3

This relay has a Lexan® cover.

For use with machine having clutch adjusted to slip at 13 amperes.

MOUNTING BASE - N451376-0302

VITAL PLUG-IN SWITCH CONTROL RELAYS
(AC Type)

PA-150SO

This catalog section covers the PA-150SO Relay which is used with ac type switch machines.

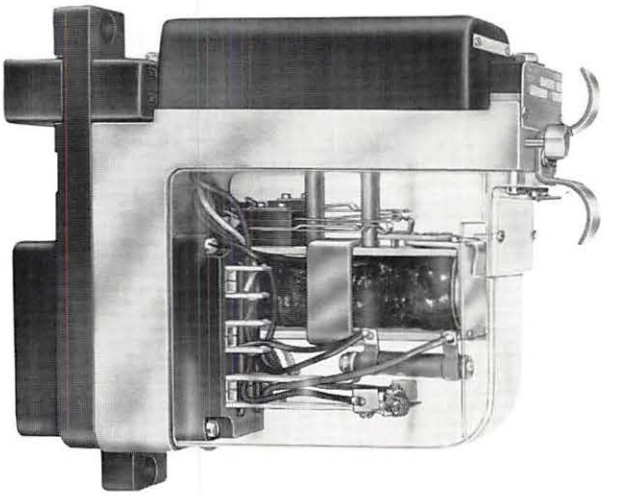

ORDERING INFORMATION

Order the relays described in this catalog section by part number from the tabulations given beneath each description. To aid in identification, specify the contacts and coil resistance along with the part number when ordering.

A mounting base is required for each relay and must be ordered by part number. The mounting base required for each relay is listed in or noted below each tabulation. When ordering the mounting base specify the relay with which it is to be used. For details on mounting plug-in relays, such as rack dimensions, etc., refer to Catalog Section RSE-4.

Front-testing facility, which is a means for opening the coil circuit during system checkout without disturbing the relay or its wiring, is available on some of the relays listed in this catalog section. These relays are noted in the individual tabulations.

Energization values given for each relay are the values that the relay will become energized, but generally response will occur at some lower value.

NOTE: For Detail Parts and Additional Information, refer to Service Manuals: SM-4571.

PA-150SO RELAY

The PA-150SO Relay is an overload relay which is used in conjunction with a PN-150BM Relay to cut off power to an ac switch machine which has stalled. The motor current flows through the coil and when the operating time (as given in the tabulation) is exceeded the relay becomes energized. This opens the control circuit of the PN-150BM Relay which, in turn, cuts off power to the switch machine.

The circuit is arranged so that once the PA-150SO Relay is energized it will remain energized until the switch control is reversed.

PART NO. WITHOUT FRONT TESTING	COIL RESISTANCE INCLUDING RESISTOR (OHMS)		OPERATING TIME – SECONDS (±10%)@	
	OPERATING	STICK	12 AMPS. AC	8 AMPS. AC
N322519-001 *	0.085	65	8	40

*For use with machine having clutch adjusted to slip at 12 amperes.

Contacts - are internally wired to accommodate the above circuitry. For more details contact U S & S.

Mounting Base - N451376-0302

VITAL PLUG-IN CODE RELAYS
(Decoding)

PN-258BC

This catalog sections covers the PN-258BC Relay, a decoding relay.

ORDERING INFORMATION

Order the relays described in this catalog section by part number from the tabulations given beneath each description. To aid in identification, specify the contacts and coil resistance along with the part number when ordering.

A mounting base is required for each relay and must be ordered by part number. The mounting base required for each relay is listed or noted below each tabulation. When ordering the mounting base specify the relay with which it is to be used. For details on mounting plug-in relays, such as rack dimensions, etc. refer to Catalog Section RSE-4.

Front testing facility, which is a means for opening the front coil circuit during system checkout without disturbing the relay or its wiring, is available on the relays listed in this catalog section.

Energization values given for each relay are, the values that the relay will become energized, but generally response will occur at some lower value.

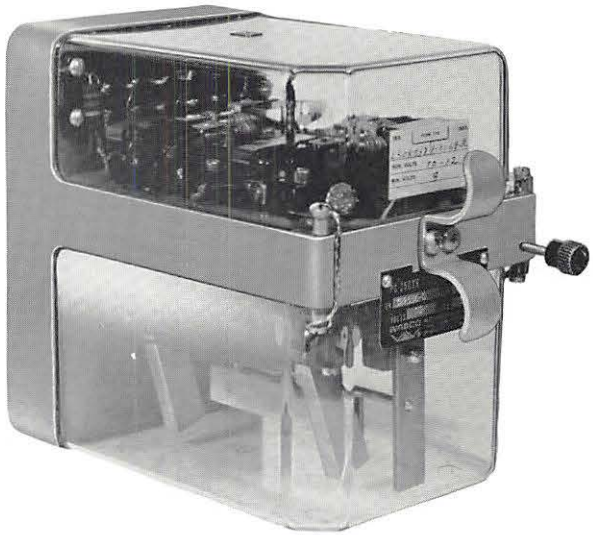

TYPICAL 250 SERIES RELAY

NOTE: For Detail Parts and Additional Information, refer to Service Manual: SM-4563-F.

PN-258BC RELAY

The PN-258BC Relay is a biased decoding relay which normally operates from a decoding transformer. It has both slow pick-up and slow drop-away characteristics.

PART NO. WITH FRONT TESTING	CONTACTS	COIL RESIS. OHMS	SNUB RESIS. OHMS	MIN. D.A. VOLTS	MAX. D.A. VOLTS	ENERGIZATION VOLTS
N322558-701	6FB Std.	*66	240	0.77	0.88	1.71

Contacts - standard low voltage silver to silver-impregnated carbon front and silver to silver back.

Mounting Base - N438689-001

*With snub resistor 51.8 ohms.

VITAL PLUG-IN CODE RELAYS

(Code Following Type)

PC-250B	**PC-250BE**	**PN-150BC**	**PN-250BE**
PC-250P	**PC-250BAE**	**PN-150BE**	**PN-150NE**

This catalog section covers code following relays. Included are PC-250B and PC-250P magnetic stick code following relays. The PC-250BE and PC-250BAE relays are high efficiency code following relays, and PN-150BC, PN-150BE, PN-150NE, and PN-250BE are decoding relays.

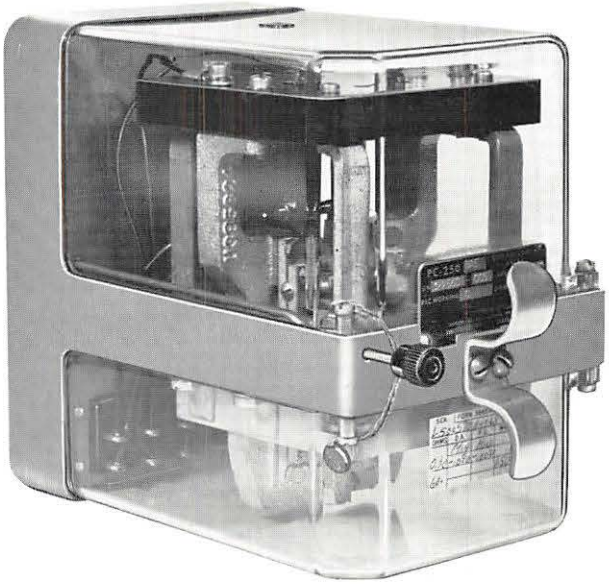

PC-250BAE RELAY

ORDERING INFORMATION

Order the relays described in this catalog section by part number from the tabulations given beneath each description. To aid in identification, specify the contacts and coil resistance along with the part number when ordering.

A mounting base is required for each relay and must be ordered by part number. The mounting base required for each relay is listed or noted below each tabulation. When ordering the mounting base, specify the relay with which it is to be used. For details on mounting plug-in relays, such as rack dimensions, etc., refer to Catalog Section RSE-4.

The relays listed in this catalog section must be horizontally separated at least 5 inches - the width of two PN-150 relays or one PN-250 relay. The resultant intervening relays spaces may be occupied by any PN-150/250 series relay, with the exception of the PC-250TR code generating relay.

Front testing facility, which is a means for opening the coil circuit during system check-out or reading current without disturbing the relay or its wiring, is available on some relays listed in this catalog section. These relays are noted in the individual tabulations.

Energization values given for each relay are the values that the relay will beome energized, but generally response will occur at some lower value.

NOTE: For detail parts and additional information refer to service manuals: SM4570 (PC-250B), SM4575 (PC-250BE), SM4570-A (PC-250P), SM-4580 (PC-250BAE), SM4551-K (PN-150BC), SM4563-A and SM4597 (PN-250BE), SM4551-L (PN150BE), SM4551-S (PN-150NE).

PC-250B RELAY

The PC-250B Relay is a biased relay designed for use as a code-following track or line relay.

PART NO. WITHOUT FRONT TESTING	CONTACT ARRANGEMENT				COIL RESIS. OHMS	MIN. P. U. AMPS	MAX. FULL STROKE AMPS	MIN. D. A. AMPS	SYSTEM VOLTAGE	OPERATING AMPS
	1 (FB)	2 (FB)	3 (FB)	4 (FB)						
N322559-003	L.V.	L.V	L.V.	L.V.	135	0.015	0.025	0.008	10-12	—
N322559-004	H.V.	H.V	H.V.	H.V.	135	0.015	0.025	0.008	10-12	—
N322559-005	H.V.	H.V	L.V.	L.V.	135	0.015	0.025	0.008	10-12	—
N322559-006	H.V.	L.V	L.V.	L.V.	18.5	0.060	0.085	0.030	—	0.092
N322559-008	L.V.	L.V	L.V.	L.V.	0.3	0.60	0.78	0.410	—	0.82
					400 400					
N322559-017	H.V.	L.V	L.V.	L.V.	135	0.015	0.025	0.008	8-12	—

CONTACTS — Two types of contacts are available in PC-250B relays: L.V. and H.V. The L.V. is silver platinum to silver platinum for use in circuits below 50 volts. The H.V. is tungsten to tungsten for use in circuits above 50 volts to provide longer contact life. However, the tungsten contacts cannot be employed in low voltage circuits due to the contact resistance which they develop.

MOUNTING BASE — N438689-003. (Used for all relays in the above tabulation.)

PC-250P RELAY

The PC-250P Relay is a magnetic stick code following relay designed for transmitting "corrected code". It is operated from a PC-250TR code generating relay and is controlled through its own contact. This "corrected code" does not change and therefore contact wear on the code generator is compensated or "corrected".

PART NO. WITHOUT FRONT TESTING	CONTACT ARRANGEMENT				COIL RESIS. OHMS	MIN. P. U. AMPS	MAX. P. U. AMPS	APPLICATION INFORMATION
	1 (NR)	2 (NR)	3 (NR)	4 (NR)				
N322559-016	L.V.	L.V	L.V.	L.V.	20	0.031	0.035	
					20	0.031	0.035	
N322559-014	N-H.V.,R-L.V.	N-H.V.,R-L.V.	L.V.	L.V.	20	0.031	0.035	
					20	0.031	0.035	
N322559-012	H.V.	H.V	H.V.	H.V.	180	0.011	0.013	8 - 12V
					180	0.011	0.013	
N322559-013	L.V.	L.V	L.V.	L.V.	180	0.011	0.013	8 - 12V
					180	0.011	0.013	
N322559-018	N-H.V.,R-L.V.	L.V	L.V.	L.V.	20/20	0.031	0.035	8 -12V

CONTACTS — Two types of contacts are available in PC-250P relays: L.V. and H.V. The L.V. is silver platinum to silver platinum for use in circuits below 50 volts. The H.V. is tungsten to tungsten for use in circuits above 50 volts to provide longer contact life. However, the tungsten contacts cannot be employed in low voltage circuits due to the contact resistance which they develop.

MOUNTING BASE — N438689-003. (Used for all relays in the above tabulation.)

RSE-4E3C

PC-250BE RELAY

The PC-250BE Relay is an efficient, biased relay designed for use as a code following track relay. It will become energized only when energy of the proper polarity is received from the track.

PART NO. WITHOUT FRONT TESTING	CONTACTS	COIL RESISTANCE IN OHMS	MINIMUM RELEASE AMPS	PICKUP		MAX. FULL STROKE AMPS	MINIMUM WORKING AMPS	MIN. OPERATING AMPS
				MIN. AMPS	MAX AMPS			
N342560-002	2FB L. V.	0.30	0.165	0.250	0.285	0.500	0.32	0.32
N322560-004	1FB L. V.	0.30	0.9	0.15	0.175			0.215

CONTACTS — The L. V. contacts in the PC-250BE Relay are silver platinum to silver platinum for use in circuits below 50 volts.

MOUNTING BASE — N438689-001 (Used for all relays in the above tabulation.)

PC-250BAE RELAY

The PC-250BAE Relay is a two coil, efficient, biased code following relay resigned for use as a series approach track relay. It becomes energized by the current being drawn from the code transmitter by the train shunting the track circuit.

This relay has a second coil which is connected to the track battery to provide compensation for changes in the battery voltage and maintain the energization point desired.

PART NO. WITHOUT FRONT TESTING	CONTACTS	COIL RESISTANCE IN OHMS	FULL D. A. MIN. RELEASE AMPS	PICKUP		MINIMUM OPERATING AMPS
				MIN. AMPS	MAX AMPS	
N322560-005	1F L. V.	0.30 60*	NA	NA	NA	NA

CONTACTS — The L. V. contacts are silver platinum to silver platinum for use in circuits below 50 volts.

MOUNTING BASE — N438689-001

*Local energization 1.5 volts from the track battery
a - .007 Contact compression; b- .015 Contact compression

PN-150BC RELAY

The PN-150BC Relay is a biased relay which is generally used as a front contact repeater of a coded track relay. It will remain energized for any code rate, but will not hold up over a change of code rates. For this reason, it is used in systems with only one code rate. For systems with more than one code rate, see the PN-150BE Relay.

The circuit in which this relay is employed can be designed to give single-stroke immunity when a snub resistor and a back contact repeater PN-258B Relay are also employed.

PART NO. WITH FRONT TESTING	CONTACTS	COIL RESISTANCE IN OHMS	MIN. D. A. VOLTS (FRONT OPEN)	ENERGIZATION	SYSTEM VOLTAGE
N322509-701	6FB	100	0.47	2.64	12
N322509-701	6FB	240	0.745	4.23	10
N322509-703	6FB	60	0.367	2.07	10-12

CONTACTS — Standard low voltage silver to silver-impregnated carbon front and silver to silver back or silver to silver front and back.

MOUNTING BASE — N451376-0302 (Used for relays in the above tabulation.)

PN-150NE RELAY

The PN-150NE Relay is a high efficiency neutral relay which responds to very low current in both directions. In order to achieve these low working values, the special contact arrangement (1FB, 1F, 1B) has been used. If more contacts are required, a PN-150B Relay can be used as a repeater. It's particular application is as a decoding relay, used in place of a PN-150BE Relay when response to both polarities is required.

PART NO. WITH FRONT TESTING	CONTACTS	COIL RESIS. OHMS		MIN. D.A. VOLTAGE	ENERGIZATION		SYSTEM VOLTAGE
		SERIES	MULTIPLE		AMPS.	VOLTS (DC)	
N322514-003	1FB, 1F, 1B Std.	60	--	0.445	0.017	1.02	*
			15	0.222	0.034	0.51	*
N322514-001	1FB, 1F, 1B Std.	1000	--	1.88	0.0043	4.33	10-12
			250	0.94	0.0086	2.16	
N322514-004	1FB, 1F, 1B Std.	4	--	0.113	0.065	0.216	
			1	0.056	0.130	0.130	

*Normally used in series with another relay.

CONTACTS — standard low voltage silver to silver impregnated carbon front and silver to silver back.

CONTACT ASSIGNMENTS — Contact 1, Type FB; Contact 2, Type B; Contact 3, Type F

MOUNTING BASE — N451376-0302 (Used for all relays in the above tabulation.)

PN-150BE RELAY

The PN-150BE RELAY is a high efficiency biased relay which is used for a front contact repeater to decode a coded track relay. The circuit in which it is used can be designed to provide single-stroke immunity and yet remain energized during a code change. If there is only one code rate and code rate change is not required, the PN-150BC Relay can be used. The PN-150BE Relay may also be operated from a decoding unit. If an equivalent relay with more contacts is required, see the PN-250BE Relay.

PART NO. WITH FRONT TESTING	CONTACTS	COIL RESISTANCE IN OHMS (SERIES)	MIN. D.A. VOLTAGE	ENERGIZATION		SYSTEM VOLTAGE
				AMPS.	VOLTS (DC)	
N322513-001	1FB, 1F, 1B Std.	60	0.445	0.0148	0.888	10
N322513-002	1FB, 1F, 1B Std.	1000	1.9	0.0038	3.8	
N322513-003	1FB, 1F, 1B Std.	2000	2.78	0.0028	5.56	
N322521-002	1FB, 1F, 1B Std.	2000	3.22	0.0033	6.6	

CONTACTS — standard low voltage silver to silver impregnated carbon front and silver to silver back.

CONTACT ASSIGNMENTS — Contact 1, Type FB; Contact 2, Type B; Contact 3, Type F

MOUNTING BASE — N451376-0302 (Used for relays in the above tabulation.)

PN-250BE RELAY

The PN-250BE Relay is a high efficiency biased relay which is used in place of the PN-150BE Relay when extra contacts are required. It is designed for use as a front contact repeater to decode a coded track relay. The circuit in which it is used can be designed to provide single-stroke immunity and yet remain energized during a code change. This relay may also be operated from a decoding unit.

PART NO. WITH FRONT TESTING	CONTACTS	COIL RESISTANCE IN OHMS (SERIES)	MIN. D.A. VOLTAGE (FRONT OPEN)	ENERGIZATION		SYSTEM VOLTAGE
				AMPS.	VOLTS (DC)	
N322550-702	6FB Std.	4	0.148	0.070	0.280	
N322550-703	6FB Std.	55	0.57	0.0197	1.08	10
N322550-704	6FB Std.	175	1.04	0.0112	1.96	
N322550-706	6FB Std.	2000	3.6	0.0034	6.8	12-24
N322550-707	4FB-1F-1B	2000	3.6	0.0034	6.8	

CONTACTS — standard low voltage silver to silver impregnated carbon front and silver to silver back.

MOUNTING BASE — N438689-001 (Used for relays in the above tabulation.)

PLUG-IN DC FLASHER RELAY

PF-256

This catalog section covers the PF-256 Relay, a special relay used for flashing lamps in signals.

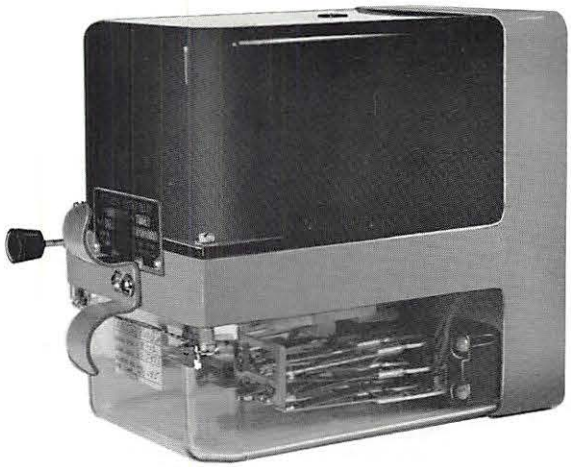

ORDERING INFORMATION

Order the relays described in this catalog section by part number from the tabulations given beneath each description. To aid in identification, specify the contacts and time range along with the part number when ordering.

A mounting base is required for each relay and must be ordered by part number. The mounting base required for each relay is listed in or noted below each tabulation. When ordering the mounting base specify the relay with which it is to be used. For details on mounting plug-in relays, such as rack dimensions, etc., refer to Catalog Section RSE-4.

The relays listed in this catalog section are not equipped with front-testing facility.

NOTE: For Detail Parts and Additional Information, refer to Service Manuals: SM-4565.

PF-256 RELAY

PF-256 Relays operate at either a nominal 45 or 65 cycles per minute to flash lamps. The 45 cycle relay is used to alternately light the lamps of grade crossing protection signals. The 65 cycle relay, as well as the 45 cycle relay, is used to flash lamps of wayside signals when such an aspect is required.

The contacts have equal open and close times, each of which is slightly less than 50% of the cycle. This ensures that there is no dark period when grade crossing signal lamps are dark. The PF-256 Relay contacts carry up to 5 amperes ac or dc.

ORDERING INFORMATION

Order by part number. The mounting base required is noted below the tabulation. For details on mounting these relays, such as rack dimensions, etc., see Catalog Section RSE-4.

PART NO.	CONTACTS	COIL RESIS. OHMS	STARTING VOLTS	SYSTEM VOLTAGE	CYCLES PER MIN. AT 68° F. (NON-ADJUSTABLE)
N322561-001	4NR	87.5 - 87.5	4.5	10-12	40 to 45
N322561-002	4NR	87.5 - 87.5	4.5	10-12	60 to 72

Contacts - low voltage silver to silver alloy normal and reverse.

Mounting Base - N438689-001

PLUG-IN TIME ELEMENT RELAYS

PT-150

This catalog section covers the PT-150 thermal time element relay.

ORDERING INFORMATION

Order the relays described in this catalog section by part number from the tabulations given beneath each description. To aid in identification, specify the contacts and time range along with the part number when ordering.

A mounting base is required for each relay and must be ordered by part number. The mounting base required for each relay is listed in or noted below each tabulation. When ordering the mounting base specify the relay with which it is to be used. For details on mounting plug-in relays, such as rack dimensions, etc., refer to Catalog Section RSE-4.

The relays listed in this catalog section are not equipped with front-testing facility.

NOTE: For Detail Parts and Additional Information, refer to Service Manuals: SM-4578.

PT-150 RELAY

The PT-150 Relay is a timing relay for the voltages, ac or dc, and time ranges tabulated. The timing is obtained thermally by heating a bi-metallic strip. The front contact is adjustable within its time range. When voltage is removed from the heater, the strip cools and returns closing the back contact at the end of the stroke. Relay is compensated for ambient temperature changes.

The total operating time, listed in the tabulation, is dependent on the front contact time adjustment and the opening of the heater circuit as soon as the front contact closes (accomplishing with the external circuit arrangement).

PIECE NO.	CONTACTS	NOMINAL VOLTAGE	HEATER COIL OHMS	TIME RANGE IN SECONDS	
				FRONT CONTACT	TOTAL OPERATING
N322518-001	1F, 1B Sil. to Sil.	10	7	5-12	25-45
N322518-003	1F, 1B Sil. to Sil.	10	10	10-40	50-120
N322518-005	1F, 1B Sil. to Sil.	12	10	5-12	25-45

Contacts - low voltage silver to silver front or back.

Mounting Base - N451376-0302

PLUG-IN LIGHT OUT RELAYS

PN-150BL

This catalog section covers the PN-150BL Relay, a power control relay used for light-out checks.

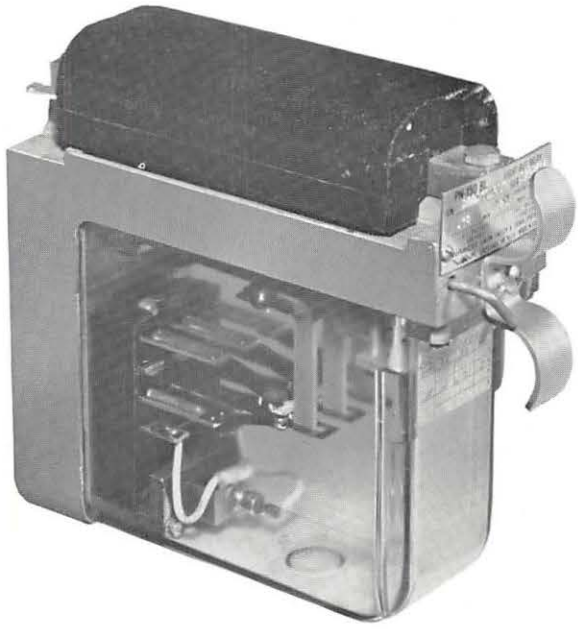

ORDERING INFORMATION

Order the relays described in this catalog section by part number from the tabulations given beneath each description. To aid in identification, specify the contacts and coil resistance along with the part number when ordering.

A mounting base is required for each relay and must be ordered by part number. The mounting base required for each relay is listed in or noted below each tabulation. When ordering the mounting base specify the relay with which it is to be used. For details on mounting plug-in relays, such as rack dimensions, etc., refer to Catalog Section RSE-4.

Energization values given for each relay are the values that the relay will become energized, but generally response will occur at some lower value.

Relays listed in this catalog section are not equipped for front testing.

NOTE: For detail parts and additional information, refer to service manual SM-6144.

PN-150BL RELAY

The PN-150BL Relay is a biased relay which is used for checking lamp filaments. The three-contact relays have an internal rectifier which permits main coil operation on both ac and dc lighting energy. The five-contact relay requires an external diode unit which can be mounted on the rear of the mounting base.

The first and fourth relays listed in the tabulation have a single coil which permits checking the lamp only when lighted.

The second and third relays listed in the tabulation have two coils. One coil is used to check the lamp when not lighted. The latter is accomplished by applying a dc voltage across the lamp and the 175 ohm coil in series. If the lamp is good, the resulting current will energize the relay but will not light the lamp.

PART NO. WITHOUT FRONT TESTING	CONTACTS	COIL RESIS. OHMS	MIN. D.A. AC AMPS	ENERGIZATION AC AMPS	FOR USE WITH LAMPS REQUIRING AC AMPS
N322510-801	3FB Std.	0.18	0.18	0.7	0.85 to 3.0
N322510-803	3FB Std.	0.30	0.18	0.7	0.85 to 3.0
			DC	DC	
			Amps. Volts	Amps. Volts	Cold Filament
		175	0.012 2.1	0.042 7.35	Check Coil
*N322526-801	5FB Std.	0.30	0.18	0.95	1.0 to 3.0
			DC	DC	
			Amps Volts	Amps Volts	Cold Filament
		175	0.012 2.1	0.042 7.35	Check Coil
N322528-801	6FB Std.	17.5	0.11	0.8	.25 to .50

CONTACTS - standard low voltage silver to silver-impregnated carbon front and silver to silver back.

MOUNTING BASE -N451376-0302

* Requires external DIODE UNIT, N434909, arranged for mounting on rear of mounting base.

PLUG-IN POWER OFF RELAYS

PN-150P

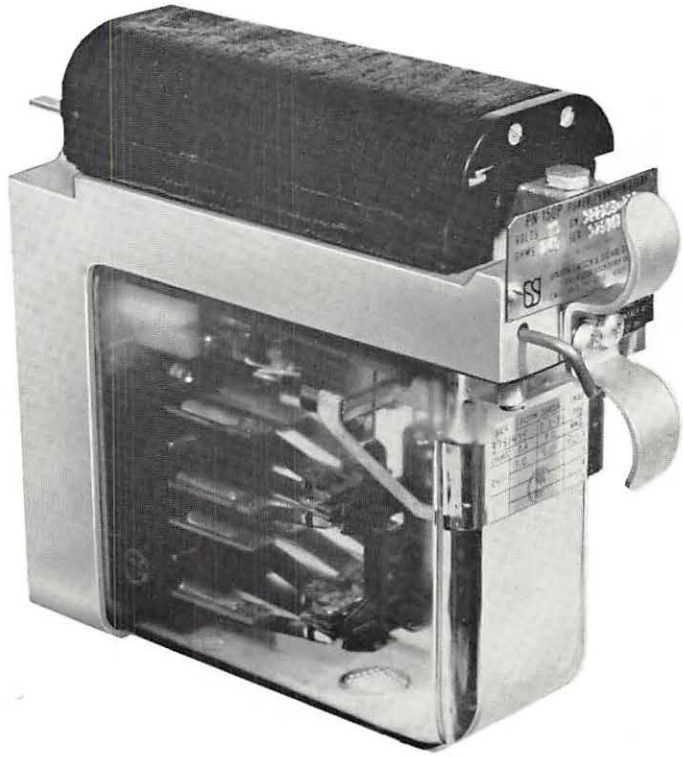

This catalog section covers the PN-150P Relay. This relay is an ac operated relay used to detect the presence of ac power and also as a power transfer relay in the absence of ac power.

ORDERING INFORMATION

Order the relays described in this catalog section by part number from the tabulations given beneath each description. To aid in identification, specify the contacts and coil resistance along with the part number when ordering.

A mounting base is required for each relay and must be ordered by part number. The mounting base required for each relay is listed in or noted below each tabulation. When ordering the mounting base specify the relay with which it is to be used. For details on mounting plug-in relays, such as rack dimensions, etc., refer to Catalog Section RSE-4.

Front-testing facility, which is a means for opening the coil circuit during system checkout without disturbing the relay or its wiring, is available on some of the relays listed in this catalog section. These relays are noted in the individual tabulations.

Energization values given for each relay are the values that the relay will become energized, but generally response will occur at some lower value.

NOTE: For Detail Parts and Additional Information, refer to Service Manual: SM-4551-F1.

PN-150P RELAY

The PN-150P Relay is a biased relay with a built-in rectifier for use on ac. This relay is used to detect the presence of ac power and to switch equipment over to standby power when the ac is off.

PART NO. WITH FRONT TESTING	CONTACTS	COIL RESIS. OHMS	ENERGIZATION VOLTS	NOMINAL AC VOLTS
N322508-702	4FB H.D.	240	9.0	10
N322508-703	4FB H.D.	400	10.8	12

Contacts - heavy duty low voltage silver to silver-impregnated carbon front and back.

Contact Assignments - 1, 4, 5, 6

Mounting Base - N451376-0302

VITAL PLUG-IN TIME ELEMENT RELAYS

PT-55

This catalog section covers the PT-55 Relay. It is a vital plug-in relay designed to provide reliable timing in wayside circuits.

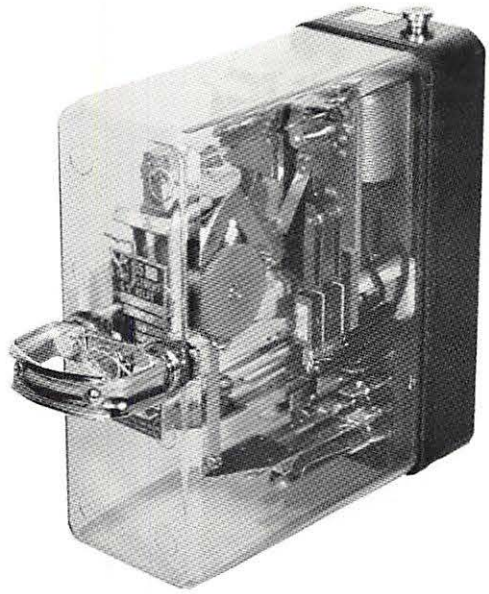

GENERAL INFORMATION

The PT-55 is a mechanical (ratchet, pawl, and gear train) time element relay used in conjunction with a code transmitter relay (PC-57) to provide time locking of switches in interlockings.

The time range is adjustable, within specified limits, for each part number when driven by the appropriate code rate from the code transmitter relay.

ORDERING INFORMATION

The tabulations that follow contain part numbers and specifications for the relays. To aid in indentification, specify normal energization volts and time range along with the part number when ordering.

A mounting base is required for each relay and must be ordered separately. Order by part number provided. For information on mounting plug-in relays, such as rack dimensions, etc., refer to Cataloge Section RSE-4.

PART NO.	NORMAL ENERG. VOLTS	TIME RANGE	MOUNTING BASE
N233133	16	2.5 - 25 sec.	N347968
N233133-001*	16	2.5 - 25 sec.	N347968
N265422	10	1.0 - 11 min.	N294403
N227899	16	0.5 - 6 min.	N292774
N232138	12	0.5 - 6 min.	N292774
N279987-001*	16	10 - 120 sec.	N374969

*With Lexan cover

NORMAL ENERG. VOLTS	CHARGE VOLTS	CLUTCH MAGNET			OPERATING MAGNET				OPERATING TEST VOLTAGES at 240 CODE FREQUENCY (See Name Plate)	
		COIL RES. IN OHMS	MIN. DROP-AWAY VOLTS	MAX.COIL P.U. & WKG. VOLTS	MIN. RES. IN OHMS	DROP-AWAY VOLTS	MAX P.U. NORMAL VOLTS	MAX P.U. HEAVY LOAD VOLTS	MIN. VOLTS	MAX. VOLTS
10	15	65	1.00	5.30	72	0.31	2.5	3.2	7.0	15
12	18	100	1.25	6.70	112	0.40	3.3	4.2	7.5	18
16	24	150	1.50	8.20	175	0.50	4.1	5.3	10.0	24

NOTE: For detail parts and additional information, refer to service manual SM3584.

PLUG-IN TIME ELEMENT RELAYS

PN-150T

This catalog section covers plug-in time element relays. The PN-150T is an electronic time element relay.

DESCRIPTION

The PN-150T Relay is a timing relay which is available for the dc voltages and time ranges tabulated. The relay utilizes solid state components for accurate timing, and has two front contacts which close at the expiration of the time interval. The time is adjusted within the range with the aid of a calibration plate by means of a potentiometer which can be sealed after adjustment. The relay is equipped with a light-emitting diode to indicate that the relay has power applied.

ORDERING INFORMATION

Order the relays described in this catalog section by part number from the tabulation. To aid in identification, specify the voltage and time range along with the part number when ordering.

A mounting base is required for each relay and must be ordered by the part number listed. For details on mounting plug-in relays, such as rack dimensions, etc., refer to Catalog Section RSE-4.

The relays listed in this catalog section are not equipped with front-testing facility.

Part No.	Contacts	Working Voltage Range Min./Max.	Time Range
N322523-301	2F Std.	8.5 - 12.5	3 - 30
N322523-302	2F Std.	10.0 - 15.0	3 - 30
N322523-303	2F Std.	13.0 - 20.0	3 - 30
N322523-304	2F Std.	8.5 - 12.5	1/2 - 5 Min.
N322523-305	2F Std.	10.0 - 15.0	1/2 - 5 Min.
N322523-306	2F Std.	13.0 - 20.0	1/2 - 5 Min.
N322523-307	2F Std.	8.5 - 12.5	1 - 10 Min.
M322523-308	2F Std.	10 - 15	1 - 10 Min.

Mounting Base - Part No. N451376-0302
Contacts - low voltage silver to silver - impregnated carbon fronts.

NOTE: For detail parts and additional information, refer to service manual SM4587

MOUNTING BASES FOR PN-150 and PN-250 RELAYS

US&S offers a new line of mounting bases for PN-150 and PN-250 plug-in relays. Molded in one piece, these bases are less deep than previous bases, yet provide a deeper interior cavity for easier wire pass-through. Ordering references have been reduced to four part numbers for the PN-150 mounting base and four part numbers for the PN-250 mounting base.

These new bases are made from long-lasting, non-burning, black thermoplastic polycarbonate material. Constructed in one piece, bases are only 1-25/32" deep. Although less in depth than the old bases the terminal cavity design provides more cavity volume than the older bases. This permits easier engagement and extraction in the case of using a #10-12 contact spring with two #10 gage wires. New receptacle springs have topside wiring to avoid improper alignments, Maintenance tools used on previous bases can also be used on our new bases.

NEW NOMENCLATURE INDEX

Our new standardized alpha-numeric nomenclature matrix (See illustration under ordering information) identifies cavitiy rows and relay contact locations. Fronts will always be one less than the heel, and the heel will always be one less than the back. The new matrix also allows for quick identification of circuit locations where a circuit board is required on the backs of the base. Rows 3 thru 6, shown in the illustration under ordering information, are allocated for that purpose.

CROSS REFERENCE INDEX

The cross reference index - Table I provides you with equivalent new part numbers when ordering new mounting bases. To facilitate prompt delivery, refer to Table I when replacing existing mounting bases with our new design bases.

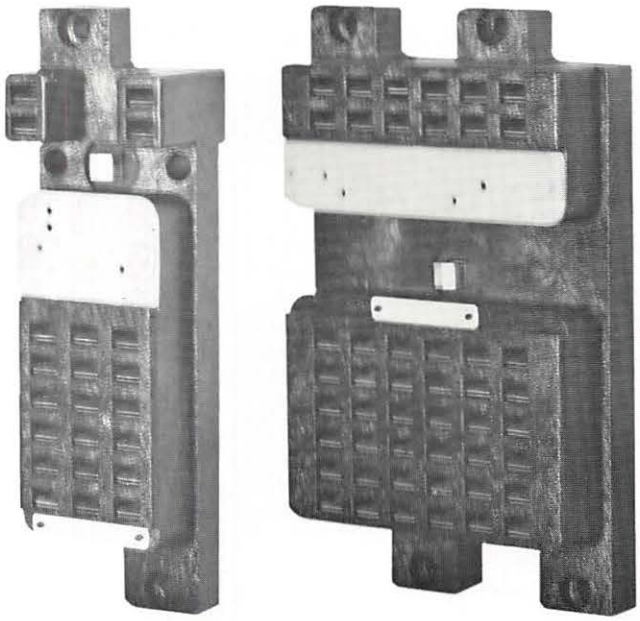

PN-150 MOUNTING BASE

PN-250 MOUNTING BASE

FEATURES

- A new standard nomenclature to identify contact cavity rows and columns.
- Made from tough non-burning, black thermoplastic polycarbonate.
- Shorter base design and larger interior cavity space make wire pass-through easier.
- More accesible, topside mounted contact receptacle springs help prevent improper alignment.
- Less part numbers, less stocking required.

TABLE 1
MOUNTING BASES — CROSS REFERENCE INDEX

PN-150 Mounting Base

EXISTING PART NUMBER	NEW PART NUMBER
N334266	N451376-0302
N335727	N451376-0302
N341626	N451376-0302
N341785	N451376-0302
N344874	N451376-0302
N349904	N451376-0302
N372344	N451376-0302
N376048	N451376-0302
N376439	N451376-0302
N382273	N451376-0302
N384259	N451376-0302
N398314	N451376-0302
N399506	N451376-0302
N399689	N451376-0302
N437090	N451376-0303
N438562	N451376-0302
N432995	N451376-0302
N433830	N451376-0302
N434814	N451376-0302
N436797	N451376-0303
N334266-099	N451376-0301
N335727-099	N451376-0301
N341626-099	N451376-0301
N341785-099	N451376-0301
N344874-099	N451376-0301
N349904-099	N451376-0301
N372344-099	N451376-0301
N376048-099	N451376-0301
N376439-099	N451376-0301
N382273-099	N451376-0301
N384259-099	N451376-0301
N398314-099	N451376-0301
N399506-099	N451376-0301
N399689-099	N451376-0301
N437090-099	J780055
N438562-099	N451376-0301
N432995-099	N451376-0301
N433830-099	N451376-0301
N436797-099	J780055
X334266-001	N451376-0302
X335727-001	N451376-0302
X341626-001	N451376-0302
X341785-001	N451376-0302
X344874-001	N451376-0302
X349904-001	N451376-0302
X372344-001	N451376-0302
X376048-001	N451376-0302
X376439-001	N451376-0302
X399506-001	N451376-0302
X399689-001	N451376-0302
X437090-001	N451376-0303
X438562-001	N451376-0302
X432995-001	N451376-0302
X433830-001	N451376-0302

PN-250 Mounting Base

EXISTING PART NUMBER	NEW PART NUMBER
N349769	N438689-001
N373979	N438689-003
N374117	N438689-001
N376442	N438689-003
N378609	N438689-003
N382814	N438689-003
N382816	N438689-003
N384243	N438689-001
N385205	N438689-001
N385788	N438689-001
N385790	N438689-001
N386458	N438689-003
N434647	N438689-003
N438695	N438689-003
N434650	N438689-003
N349769-099	N438689
N373979-099	N438689-002
N374117-099	N438689
N376442-099	N438689-002
N378609-099	N438689-002
N382814-099	N438689-002
N382816-099	N438689-002
N384243-099	N438689
N385205-099	N438689
N385788-099	N438689
N385790-099	N438689
N386458-099	N438689-002
N434647-099	N438689-002
N434650-099	N438689-002
N438695-099	N438689-002
X349769-001	N438689-001
X373979-001	N438689-003
X374117-001	N438689-001
X376442-001	N438689-003
X378609-001	N438689-003
X382814-001	N438689-003
X382816-001	N438689-003
X384243-001	N438689-001
X385205-001	N438689-001
X434647-001	N438689-003
X434650-001	N438689-003
X438695-001	N438689-003

ORDERING INFORMATION

Order from the tabulation below, or if replacing an existing relay mounting base, refer to Table 1, Mounting Base Cross Reference Index. ***Part numbers for the Receptacle Contact Springs are listed on the back page.***

MOUNTING BASE FOR PN-150 RELAY

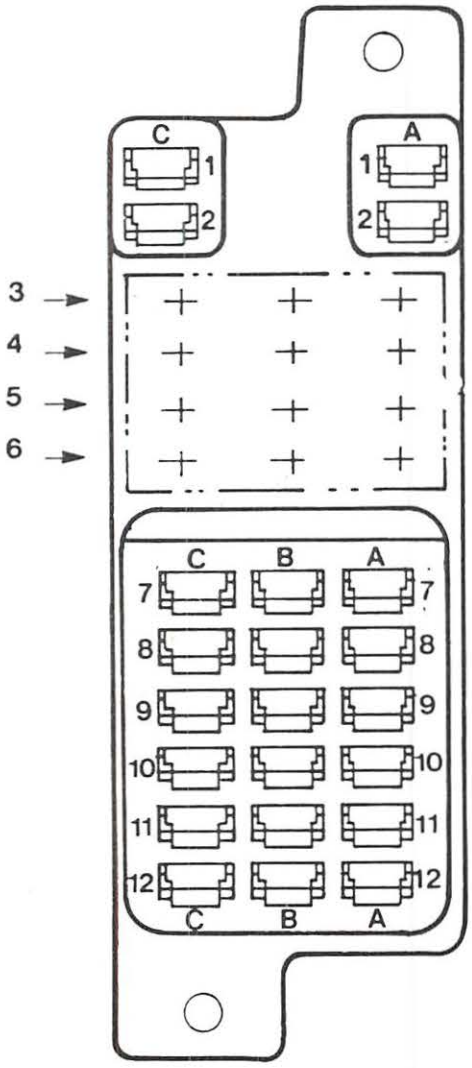

PART NO.	DESCRIPTION
N451376-0301	Wayside Mtg. Base Only
N451376-0302	Wayside Mtg.Base with Hardware.
N451376-0303	Car-Carried Mtg. Base with Hardware

MOUNTING BASE FOR PN-250 RELAY

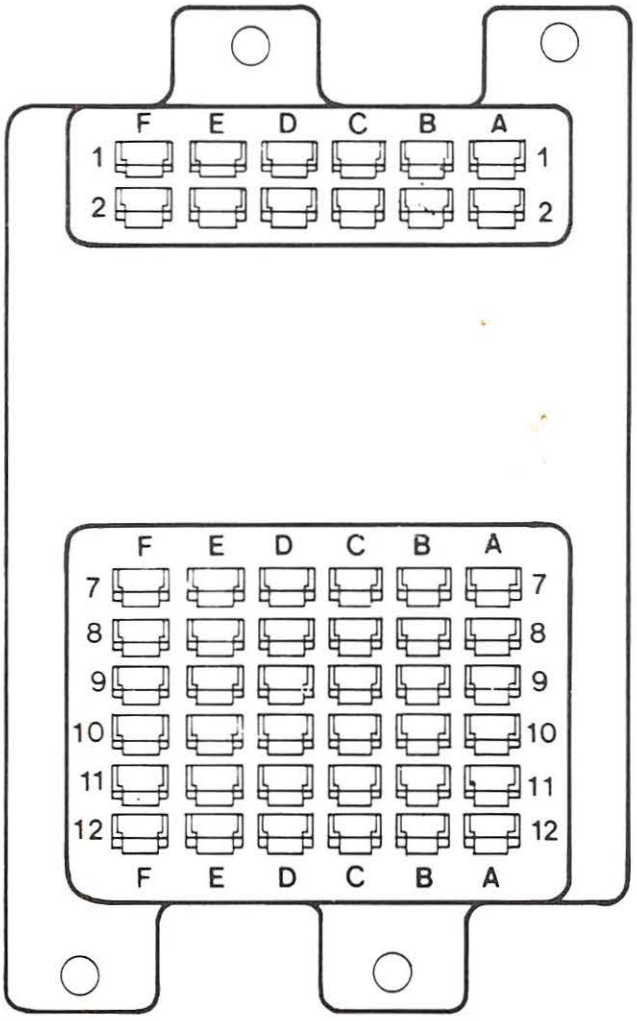

PART NUMBER	DESCRIPTION
N438689	Mounting Base only Latch facing right
N438689-001	Mounting Base Latch facing right, w/ Hardware
N438689-002	Mounting Base Only Latch facing left
N438689-003	Mounting Base Latch facing left, w/ Hardware

RECEPTACLE CONTACT SPRINGS

Contact springs are available for AWG #10/#12, and #14/#16, and #18/#20 wire. Determine your requirements and order from the tabulation.

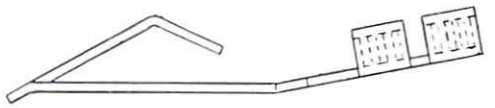

SIDE VIEW

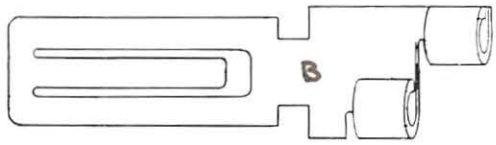

TOP VIEW

AWG WIRE SIZE	CONTACT SPRING
#10/#12 AWG	J680195-0002
#14/#16 AWG	J680195-0001
#18/#20 AWG	J680195

RELAYS, SHELF

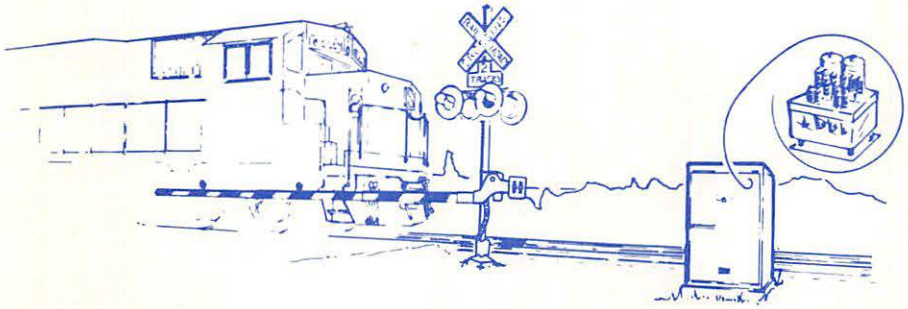

RSE-5

RELAYS, SHELF

GENERAL

General Information for Shelf Relays RSE-5

VITAL SHELF DC LINE RELAYS

Biased RSE-5A1
Neutral RSE-5A2
Slow Dropaway/Slow Pickup RSE-5A3
Magnetic Blowout RSE-5A4
Polarized RSE-5A5

VITAL SHELF DC TRACK RELAYS

Biased RSE-5B1
Neutral RSE-5B2
Polarized RSE-5B3

VITAL SHELF SWITCH CONTROL RELAYS

DC Switch Overload RSE-5C1
AC Switch Overload RSE-5C2

VITAL SHELF CODE RELAYS

Code Transmitting RSE-5D1
Code Following RSE-5D2

VITAL SHELF CONTROL RELAYS

Flasher RSE-5E1
Time Element RSE-5E2
Light Out RSE-5E3
Power Off RSE-5E4
Approach Lighting RSE-5E5

CROSS REFERENCE INDEX

US&S shelf relays are alphabetically listed below, by type designation. The relay description and catalog section in which the relay appears are shown opposite the relay designation.

RELAY	DESCRIPTION	CATALOG SECTION
CD	Code Following - Ordinary Acting	RSE-5D2
CDP	Code Following - Magnetic Stick	RSE-5D2
DM	Code Transmitting	RSE-5D1
DN-11	Neutral DC Line - Ordinary Acting	RSE-5A2
DN-11	Neutral DC Line - Slow Dropaway	RSE-5A3
DN-11	Neutral DC Track	RSE-5B2
DN-11B	Biased DC Line	RSE-5A1
DN-11B	Biased DC Track	RSE-5B1
DN-11C	Biased DC Line	RSE-5A1
DN-11P	Power Off	RSE-5E4
DN-18	Slow Pickup - Slow Dropaway	RSE-5A3
DN-18C	Code Following	RSE-5D2
DN-19	Slow Dropaway/Slow Pickup	RSE-5A3
DN-19A	Slow Dropaway/Slow Pickup	RSE-5A3
DN-22	Neutral DC Track - Ordinary Acting	RSE-5B2
DN-22A	Neutral DC Line - Ordinary Acting	RSE-5A2
DN-22A	Neutral DC Line - Slow Dropaway	RSE-5A3
DN-22B	Biased DC Track	RSE-5B1
DN-22BH	Biased DC Track - High Dropaway	RSE-5B1
DN-22C	Code Following	RSE-5D2
DN-22L	Light Out	RSE-5E3
DN-22P	Power Off	RSE-5E4
DNL-4	Control - Approach Lighting - Track & Line	RSE-5E5
DP-14	Polarized DC Line - Ordinary Acting	RSE-5A5
DP-14	Polarized DC Track	RSE-5B3
DP-21	Polarized DC Line - Retained Neutral	RSE-5A5
DP-25	Polarized Switch Control	RSE-5A4
DT-10	Time Element	RSE-5E2
FL-28	Flasher	RSE-5E1
FN-16A	Flasher	RSE-5E1
FN-27	Flasher	RSE-5E1
OR-10	Switch Overload (DC)	RSE-5C1
OR-11	Switch Overload (DC)	RSE-5C1
OR-20	Switch Overload (AC)	RSE-5C2
P-4	Code Following - High Efficiency	RSE-5D2
TH-10	Time Element - Thermal	RSE-5E2

GENERAL INFORMATION FOR SHELF RELAYS

US&S shelf relays will equip the signal engineer with time-proven relays for the design of new signal systems or the expansion of existing signal systems. Whatever the requirement, line or track circuit, grade crossing control, or approach lighting, a relay or series of relays is available.

Shelf relays have been arranged by functional groups that include line, track, switch control, code, and control relays. Where applicable, each group has been further subdivided by relay operating characteristics and presented in individual Catalog Sections as shown in the contents for this category.

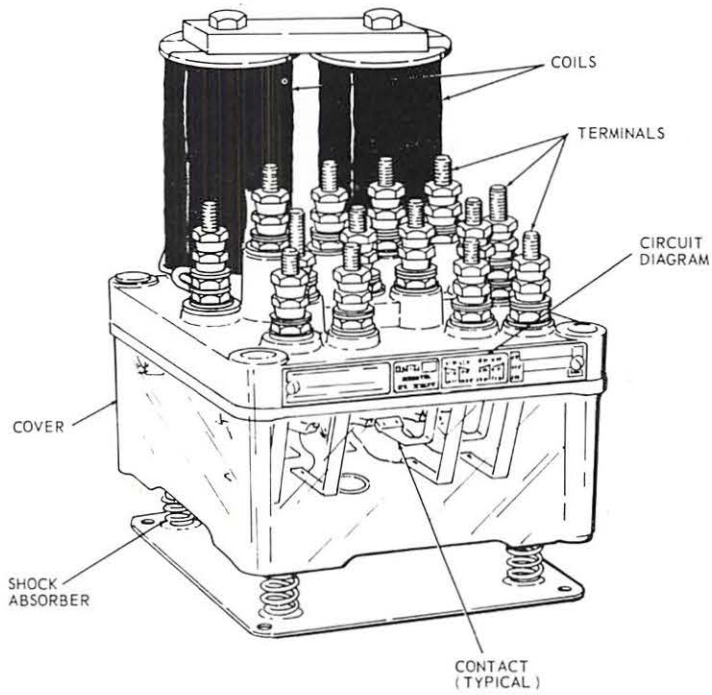

TYPICAL SHELF RELAY

FEATURES

- Conform to AAR requirements.
- Current carrying parts will withstand 3000-volt dielectric strength test.
- Factory calibrated for applications across wide environmental range.
- Moving parts are protected by sturdy, transparent, dust and moisture resistant cover.
- Mounted on spring shock absorbers.
- Relays replaced without disconnecting individual wires - using plug connectors.
- Available for shelf or wall mounting.
- Efficient and reliable signal service-long time proven record.

DESCRIPTION

US&S shelf relays are available in numerous coil and contact configurations. Each unit is factory calibrated to operate across a wide range of environmental conditions. Basic types of shelf relays are listed in the index provided on the contents page of this section. Many variations of shelf relays are offered to satisfy numerous requirements. Details regarding individual relays may be found in the tabulations contained in the ordering information for each type relay.

COILS

Shelf relays are equipped with one or more coils depending on the relay type. The coils are mounted on top of the relay, making them easily changeable.

CONTACTS - GENERAL

Contact fingers and springs are heat treated to assure uniformity of material and contact stability. Heel contacts are actuated by operating arms attached to the armature. Contact surfaces have sufficient wiping action to be self-cleaning.

All contacts are factory adjusted to standard 0.050″ minimum opening and conform to AAR requirements.

CONTACT CONFIGURATIONS

Front and back contacts are designated F and B, respectively, in the tabulations. Dependent contacts are denoted in the tabulations as FB, while independent contacts are denoted by the use of F or B alone.

Polar contacts are denoted N for normal and R for reverse.

CONTACT MATERIAL

Contact materials or designations for specific applications are denoted by symbols or abbreviations in the tabulation.

- Standard contacts are silver to silver impregnated carbon fronts and silver to silver backs. These are designated Std.
- Silver to silver fronts to silver to silver backs are designated S-S.
- Silver to silver-impregnated carbon contacts are designated S.I.C.

All of the above contacts are rated 4 amperes at 30 VDC or 175 volts AC unless otherwise designated.

Other special contact materials are given under specific relay descriptions and tabulations.

SPECIAL CONTACTS

Other types of contact configurations, materials, or ratings designed for special applications are included with specific relay descriptions or tabulations. These specials include:

- **Heavy Duty (H.D.)**-Rating-15 amperes at 30 volts dc or 175 volts ac. Contact material is silver to S.I.C. fronts and silver to silver backs unless otherwise designated.
- **Magnetic Heavy Duty (M.H.D.)**- Magnetic Heavy Duty contacts are also known as magnetic blowout. Magnetic blowout is a principle which utilizes permanent magnet to attract and lengthen current arcs so that they are extinguished more rapidly. Applied to relays, the magnetic blowout principle insures contact reliability and long life. Contact material for M.H.D. contacts is silver to S.I.C. fronts; rating - 15 amperes at 30 volts dc or 175 volts ac.

COVER

A cover of transparent molded material houses the relay contacts and armature structure. The cover is sealed to the frame by pressure against a gasket providing a tight, dust-proof, moisture-protected assembly.

SHOCK ABSORBERS

All relays are supplied with spring shock absorbers for shelf mounting. Wall mounting brackets with shock absorbers are available for most relays. Refer to the ordering information of the individual relay.

PLUG COUPLERS

Plug couplers are available for most relays to permit replacement of the relay without disconnecting individual wires. Refer to the ordering information of the individual relay.

CIRCUIT DIAGRAM

The nameplate of each relay contains a contact diagram which will be found useful for installation and testing of the relay.

VITAL SHELF DC LINE RELAYS
(Biased)

DN-11B DN-11C DN-22B

The DN-11B, DN-11C and DN-22B Relays are biased line relays designed for battery checking circuits, and for general circuit applications requiring a biased type relay.

The DN-11B Relay is available in 4-contact configuration. The DN-11C Relay is available in 6-contact configuration. These two relays are used for most circuit applications. The DN-22B is provided in a 2-contact configuration only and is recommended for application where only one or two contacts are required.

The DN-11B and DN-22B Relays are also available for track circuit applications as described in Catalog Section RSE-5B1.

DN-11B RELAY

HEIGHT	8-5/8″
WIDTH	6-1/4″
DEPTH	6-1/4″

DESCRIPTION

The DN-11B, DN-11C and DN-22B Relays are available with low voltage contacts.
Contacts are Standard: silver to silver-impregnated carbon front and silver to silver backs. S.I.C. contacts are also available and are designated in the tabulation. These contacts have a 4-ampere capacity at 30 volts dc or 175 volts ac.
These relays are shock mounted for shelf or wall mounting. Connections to the relays can be made directly or through plug couplers that permit quick connections to the terminals for removal and replacement.

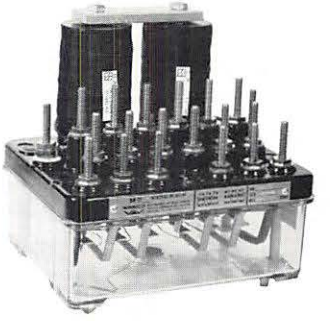

DN-11C RELAY

HEIGHT	8-5/8″
WIDTH	7-5/8″
DEPTH	6-1/4″

These relays offer the following additional features:

- Permanent magnet bias.
- Responds to current of one polarity only.
- Permanent magnets provide armature hold-down when relay is deenergized.
- Armature will not pickup on either polarity if permanent magnets become demagnetized.
- Relay will not pick up with applications of energy of reverse polarity at 50 times normal working value.

DN-22B RELAY

HEIGHT	8″
WIDTH	4″
DEPTH	6-3/4″

ORDERING INFORMATION

The tabulations that follow contain part numbers and specifications for ordering relays. To order, consult the tabulations. Determine the coil resistance and contacts required and then order by part number specified. To aid in identification, specify the contacts and coil resistance selected along with the part number when ordering.

Order should specify if wall mounting brackets and/or plug couplers are required.

Energization amperes and voltage, as shown in the tabulations, are the values at which the relay assumes the full energized position.

4-CONTACT DN-11B VITAL SHELF BIASED DC LINE RELAY

PART NO.	CONTACTS	COIL RESIS. OHMS	ENERGIZATION		MIN. FULL D.A. VOLTAGE
			AMPS.	VOLTAGE	
N274069	4FB Std.	500	0.0075	3.75	1.22
N274070	4FB Std.	1000	0.0056	5.64	1.84

NOTE: For Detail Parts and additional Information, refer to Service Manual: SM-2444-Z2.

6-CONTACT DN-11C VITAL SHELF BIASED DC LINE RELAY

PART NO.	CONTACTS	COIL RESIS. OHMS	ENERGIZATION		MIN. FULL D.A. VOLTAGE
			AMPS	VOLTAGE	
N221112	6FB Std.	55	0.0197	1.08	0.57
N257119	6FB Std.	175	0.0112	1.96	1.04

NOTE: For Detail Parts and additional Information, refer to Service Manual: SM-2684.

2-CONTACT DN-22B VITAL SHELF BIASED DC LINE RELAY

PART NO.	CONTACTS	COIL RESIS. OHMS	ENERGIZATION		MIN. FULL D.A. VOLTAGE
			AMPS.	VOLTAGE	
N272937	2FB Std.	500	0.00618	3.09	1.17

NOTE: For Detail Parts and additional Information, refer to Service Manual: SM-2666-J.

VITAL SHELF DC LINE RELAYS
(Neutral)

DN-11

This catalog section covers DN-11 and DN-22A Neutral DC Line Relays. The DN-11 Relay has wide application in line signal circuits requiring an ordinary acting neutral relay with 4-, 6-, or 8-contacts.

The DN-22A Relay is an ordinary acting neutral relay and is available in a 2-contact configuration.

The DN-11 and DN-22A Relays may also be used in track circuits as described in Catalog Section RSE-5A2.

DN-11 NEUTRAL DC RELAY

DN-11 Relays covered in this catalog section are neutral line relays with ordinary acting characteristics. Arrangements of 4-, 6-, and 8-contacts are available with low voltage and heavy duty contacts.

Contacts are Standard: silver to silver-impregnated carbon front and silver to silver backs. S.I.C. contacts are also available and are designated in the tabulation. These contacts have a 4-ampere capacity at 30 volts dc or 175 volts ac.

Special heavy duty low voltage contacts are also available and are designated H.D. in the tabulations. These contacts have a 15-ampere capacity and are silver-impregnated carbon front and silver to silver back.

DN-11 Relays contain compound spring contacts which improve back contact performance during vibration.

These relays are supplied with shock absorbers for shelf mounting. Wall mounting brackets with shock absorbers will be supplied when specified on the order.

DN-22A

Connections to the relays can be made directly or through plug couplers that permit quick connections to the terminals for removal and replacement.

DN-22A NEUTRAL DC RELAY

The DN-22A Relay is an ordinary acting two-contact relay and is available with low voltage contacts only.

Contacts are Standard: silver to silver-impregnated carbon front and silver to silver backs. S.I.C. contacts are also available and are designated in the tabulation. These contacts have a 4-ampere capacity at 30 volts dc or 175 volts ac.

The armature dead weight torque of the DN-22A Relay is 50 percent greater than AAR requirements.

Mounting arrangements for the DN-22A are the same as the DN-11 Relay.

ORDERING INFORMATION

The tabulations that follow contain part numbers and specifications for ordering relays. For convenience the DN-11 Relay tabulations have been divided into 4-, 6-, and 8-contact arrangements. Variations in contacts are shown within each tabulation.

To order, consult the tabulation. Determine the contacts and coil resistance required, and order by the part number specified. To aid in identification, specify the contacts and coil resistance selected along with the part number when ordering.

Order should specify if wall mounting brackets are required.

Order should specify if plug couplers are required.

Energization voltage, as shown in the tabulations, is the voltage at which the relays assumes the full energized position.

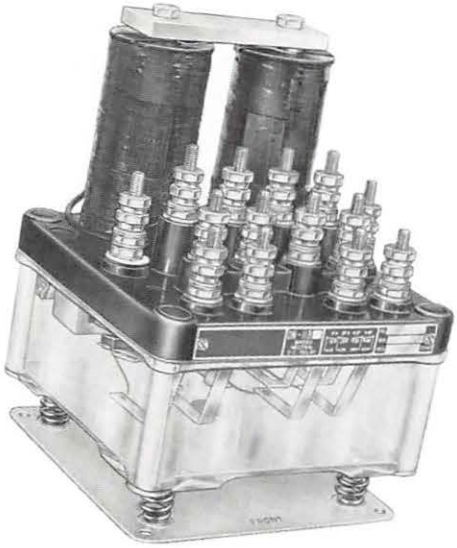

DN-11 RELAY (4-CONTACT)

HEIGHT	8-5/8″
WIDTH	6-1/4″
DEPTH	6-1/4″

DN-11 RELAY (6-CONTACT)

HEIGHT	8-5/8″
WIDTH	7-5/8″
DEPTH	6-1/4″

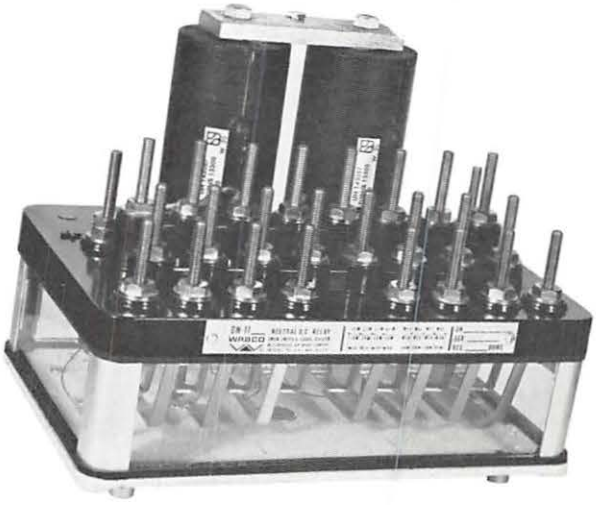

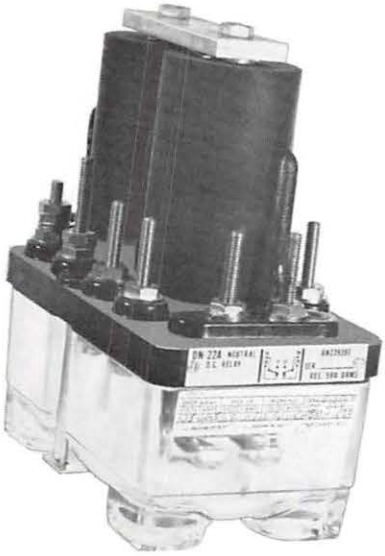

DN-22A RELAY (2-CONTACT)

HEIGHT	8-9/32″
WIDTH	4″
DEPTH	6-3/8″

4-CONTACT DN-11 SHELF NEUTRAL DC LINE RELAY (ORDINARY ACTING)

PART NO.	CONTACTS	COIL RESIS. OHMS	ENERGIZATION VOLTAGE	MIN. FULL D.A.	
				AMPS.	VOLTAGE
N213536	4FB Std.	16	0.544	0.018	0.288
N159679	4FB Std.	60	1.26	0.0110	0.66
N159996	4FB Std.	250	2.61	0.0055	1.38
N157285	4FB Std.	500	3.50	0.0037	1.85
N157187	4FB Std.	1000	5.27	0.0028	2.78
N161396	4FB Std.	1500	6.56	0.0023	3.74
N214333	4FB H.D.	500	5.50	0.0037	1.85
N231336	2FB Std. 2FB H.D.	500	4.85	0.0037	1.85
N257117	4FB Std.	175	1.96	0.0059	1.04
N213667	4FB H.D.	670	6.70	0.0033	2.25
N214494	4FB H.D.	1000	8.27	0.0028	2.78
N214711	2FB Std. 2FB Special*	1000	5.27	0.0028	2.78

Special* - Contacts are silver to S.I.C. fronts and silver to silver backs.

NOTE: For Detail Parts and additional Information, refer to Service Manual: SM-2444 and 2444-Z1.

6-CONTACT DN-11 SHELF NEUTRAL DC LINE RELAY (ORDINARY ACTING)

PART NO.	CONTACT	COIL RESIS. OHMS	ENERGIZATION VOLTAGE	MIN. FULL D.A. VOLTAGE
N159871	6FB Std.	500	4.85	2.05
N159864	6FB Std.	670	5.91	2.47
N158263	6FB Std.	1000	7.30	3.10
N160025	6FB S.I.C.	1000	7.30	3.10
N262423	2FB Std. 4FB H.D.	500	6.45	2.55
N222664	6FB H.D.	1000	9.70	3.80

NOTE: For Detail Parts and additional Information, refer to Service Manual: SM-2444 and SM-2444-Z1.

8-CONTACT DN-11 SHELF NEUTRAL DC LINE RELAY (ORDINARY ACTING)

PART NO.	CONTACTS	COIL RESIS. OHMS	ENERGIZATION VOLTAGE	MIN. FULL D.A.	
				AMPS.	VOLTAGE
N157353	8FB. Std.	670	6.70	.0045	2.23
N159870	8FB. Std.	500	5.50	.0045	2.23
N161333	8FB. Std.	1000	8.27	.0034	3.36

NOTE: For Detail Parts and additional Information, refer to Service Manual: SM-2444, SM-2444-A, and SM-2444-Z1.

2-CONTACT DN-22A SHELF NEUTRAL DC LINE RELAY (ORDINARY ACTING)

PART NO.	CONTACTS	COIL RESIS. OHMS PER PAIR	ENERGIZATION VOLTAGE	MIN. FULL D.A.	
				AMPS.	VOLTAGE
N224121	2FB Std.	16	0.44	0.014	0.217
N224122	2FB Std.	40	0.67	0.0084	0.335
N224123	2FB Std.	60	0.89	0.0074	0.44
N239397	2FB Std.	500	2.50	0.0075	1.25
N224890	2FB Std.	1000	3.76	0.0019	1.88
N224382	2FB Std.	2000	5.55	0.0014	2.78
N251714	2FB Std.H.D.	1000	3.76	0.0019	1.88
N300717*	2FB Std.	2000	6.66	0.0016	3.22
N316906	2F S.I.C. 1B	2000	5.55	0.0014	2.78

*Special calibration for use with "UT" timing unit in highway crossing delayed start applications. Relay max. full D.A. Amps 0.0018, volts 3.56.

NOTE: For Detail Parts and additional Information, refer to Service Manual: SM-2666.

VITAL SHELF NEUTRAL DC LINE RELAYS

(Slow Dropaway-Pickup)

DN-11 DN-18 DN-19 DN-19A DN-22A

The neutral dc relays covered in this catalog section provide dropaway and pickup characteristics for signal circuits requiring the introduction of time delay intervals. These relays are offered in a variety of contact and coil configurations and are factory calibrated to be used across a wide environmental range.

The DN-18 Relay is applicable for use in APB and CTC Systems. The DN-19 Relay is used in Crossing Gate Control and other special traffic control work.

DESCRIPTION

These Relays are similar to the ordinary acting DN-11 Relays but make use of copper tubes and adjustable magnetic shunt, separately or in combinations to provide the time characteristics desired. Three combinations of pickup and dropaway characteristics are available including slow pickup, ordinary dropaway,slow pickup slow dropaway and ordinary pickup, slow dropaway.

Contact arrangements are 2-, 4-, 6-, and 8-low voltage and heavy duty contacts.

Contacts are standard silver to silver-impregnated carbon front and silver to silver back or S.I.C. silver to silver-impregnated carbon for both front and back. These contacts have a 4 ampere capacity at 30 volts dc or 175 volts ac.

Heavy duty contacts are also available and are designated H.D. in the tabulations. These contacts have a 15 ampere capacity and are silver to silver-impregnated carbon front and silver to silver back.

All Relays are shock mounted. Connections to the relays can be made directly or through plug couplers that permit quick connections to the terminals for removal and replacement.

ORDERING INFORMATION

The tabulations that follow contain part numbers and specifications for ordering relays. To order, consult the tabulations. Determine the coil resistance and contacts required and then order by part number specified. To aid in identification, specify the contacts and coil resistance selected along with the part number when ordering.

Order should specify if wall mounting brackets and or plug couplers are required.

Energization voltage, as shown in the tabulations, is the value at which the relay assumes the full energized position.

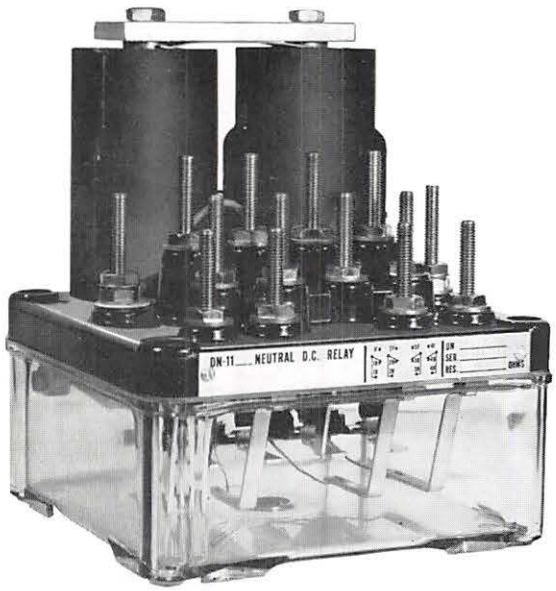

DN-11 RELAY

	CONTACTS		
	4	6	8
HEIGHT	8-5/8''	8-5/8''	8-3/8''
WIDTH	6-1/4''	7-5/8''	9-5/8''
DEPTH	6-1/4''	6-1/4''	6-1/4''

DN-18 RELAY

	CONTACTS	
	4	6
HEIGHT	8-1/4''	8-1/4''
WIDTH	6-1/4''	7-5/8''
DEPTH	6-1/4''	6-1/4''

DN-19 RELAY

HEIGHT	9-5/8″
WIDTH	6-11/32″
DEPTH	6-19/64″

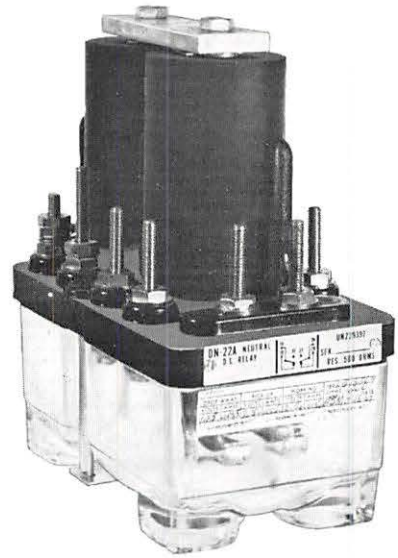

DN-22A

HEIGHT	8-9/32″
WIDTH	4″
DEPTH	6-3/8″

4 CONTACT DN-11 VITAL SHELF NEUTRAL DC RELAY [SLOW DROPAWAY]

PART NO.	CONTACTS	COIL RESIS. OHMS	ENERGIZATION VOLTAGE	MIN. D.A. TIME	
				0.8 SEC. AT VOLTAGE	1.0 SEC. AT VOLTAGE
N157284	4FB Std	400	5.25	6.00	7.5
N157188	4FB Std	500	6.56	7.50	9.38
N168295	4 FB Std	250	5.25	1.8 SEC. D.A. AT 8.0V	

NOTE: For Detail Parts and additional Information, refer to Service Manual: SM-2444 and 2444-Z1.

6 CONTACT DN-11 VITAL SHELF NEUTRAL DC RELAY [SLOW DROPAWAY]

PART NO.	CONTACTS	COIL RESIS. OHMS	ENERGIZATION VOLTAGE	MIN. D.A. TIME	
				0.8 SEC. AT VOLTAGE	1.0 SEC. AT VOLTAGE
N168245	6FB Std	250	5.67	6.55	8.07
N159553	6FB Std	400	6.50	7.50	9.25
N173931	6FB Std	500	8.14	9.38	11.55

NOTE: For Detail Parts and additional Information, refer to Service Manual: SM-2444 and 2444-Z1.

8 CONTACT DN-11 VITAL SHELF NEUTRAL DC RELAY [SLOW DROPAWAY]

PART NO.	CONTACTS	COIL RESIS. OHMS	ENERGIZATION VOLTAGE	MIN D. A. TIME
				1.0 SEC. AT VOLTAGE
N207618	8F&6B Std.	200	5.88	7.33

4 CONTACT DN-18 VITAL SHELF NEUTRAL DC RELAY [SLOW PICKUP/ORDINARY DROPAWAY]

PART NO.	CONTACTS	COIL RESIS. OHMS	SYSTEM VOLTAGE	ENERGIZATION VOLTAGE	MIN. P.U. TIME	
					1.0 SEC. AT VOLTAGE	0.85 SEC. AT VOLTAGE
N196833	4FB Std	2200/pr	10.0	9.0	10.0	11.0

NOTE: For Detail Parts and additional Information, refer to Service Manual: SM-2390-A.

4 CONTACT DN-18 VITAL SHELF NEUTRAL DC RELAY [SLOW PICKUP/SLOW DROPAWAY]

PART NO.	CONTACTS	COIL RESIS. OHMS	ENERGIZATION VOLTAGE	P.U. TIME		D.A. TIME	
				2.3 SEC. AT VOLTAGE	2.0 SEC. AT VOLTAGE	0.7 SEC. AT VOLTAGE	1.1 SEC. AT VOLTAGE
N172634	4FB Std	350	9.0	10	11.0	7.46	10

NOTE: For Detail Parts and additional Information, refer to Service Manual: SM-2390.

6 CONTACT DN-18 VITAL SHELF NEUTRAL DC RELAY [SLOW PICKUP/ORDINARY DROPAWAY]

PART NO.	CONTACTS	COIL RESIS. OHMS	SYSTEM VOLTAGE	ENERGIZATION VOLTAGE	MIN. P.U. TIME	
					1.0 SEC. AT VOLTAGE	0.85 SEC. AT VOLTAGE
N183895	6FB Std	2200	12.0	7.30	10.0	11.0
N213987	6FB Std	3000	12.0	8.76	12.0	13.2

NOTE: For Detail Parts and additional Information, refer to Service Manual: SM-2390-A.

4 CONTACT DN-19 VITAL SHELF NEUTRAL DC RELAY (ORDINARY PICKUP/SLOW DROPAWAY)

PART NO.	CONTACTS	COIL RESIS. OHMS	ENERGI-ZATION VOLTAGE	P.U. TIME		D.A. TIME	
				1.2 SEC. AT VOLTAGE	1.0 SEC. AT VOLTAGE	3.50 SEC. MAX. AT VOLTAGE	2.0 SEC. MIN. AT VOLTAGE
N187950	4FB Std	350	6.25	10.4	11.5	10.4	7.80
N179495	4FB Std	225	4.8	8.0	8.8	8.0	6.0

NOTE: For Detail Parts and additional Information, refer to Service Manual: SM-2390 and SM-2390-B.

4 CONTACT DN-19A VITAL SHELF NEUTRAL DC RELAY (SLOW DROPAWAY)

PART NO.	CONTACTS	COIL RESIS. OHMS	ENERGIZATION VOLTAGE	D.A TIMES BETWEEN MIN.-MAX. AT VOLTAGE
N331643	4FB Std	225	4.80	**4.0 SEC. MIN. - 5.0 SEC. MAX. @ V.**
				10.0
N336023	4FB H.D.	225	6.70	**2.75 SEC. MIN. - 4.25 SEC. MAX. @ V.**
				10.0

NOTE: For Detail Parts and additional Information, refer to Service Manual: SM-2390.

2 CONTACT DN-22A VITAL SHELF NEUTRAL DC RELAY [SLOW DROPAWAY]

PART NO.	CONTACTS	COIL RESIS. OHMS	ENERGIZATION VOLTGE	MIN. D.A. TIME	
				0.8 SEC. AT VOLTAGE	1.0 SEC. AT VOLTAGE
N224388	2FB Std	250	3.20	4.65	5.80
N224389	2FB Std	400	3.64	5.32	6.68
N224390	2FB Std	500	4.55	6.65	8.35
N224392	2FB Std	1500	7.20	10.40	13.00
N234820	2F-1FB	1500	7.20	10.40	13.00
N285645	2FB Std	1500	7.20	10.40	13.00

NOTE: For Detail Parts and additional Information, refer to Service Manual: SM-2666-B.

D. C. LINE RELAYS
(Magnetic Blowout)

DP-25

The DP-25 Relay is a polarized relay with blowout magnets to extinguish the current arc when the heavy duty neutral contacts are opened.

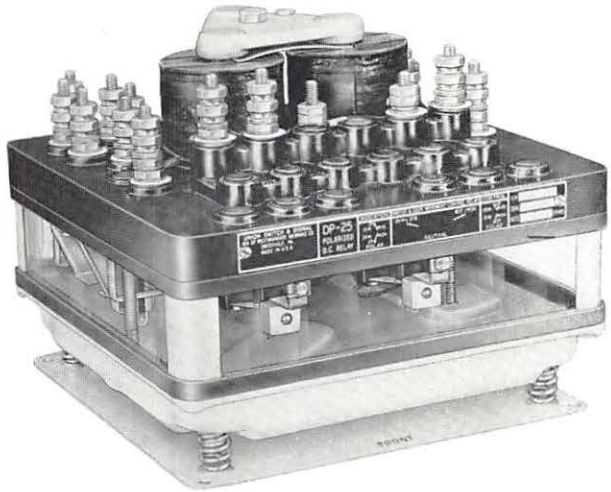

The relay is furnished with two polar contacts of silver to silver-impregnated carbon, normal and reverse, two polar contacts of silver to silver, normal and reverse and two heavy duty neutral contacts with magnetic blowouts (M.H.D.).

The relay contains a large permanent magnet which provides greater clearances between moving parts and higher polar contact pressure.

Polar armature of this relay remains in last energized position and maintains full pressure on polar contacts.

The DP-25 Relay is shock mounted for shelf or wall mounting. Connections to the relay can be made directly or through plug couplers that permit quick connections to the terminals for removal and replacement.

DP-25 RELAY

HEIGHT	6-3/4"
WIDTH	9"
DEPTH	9"

ORDERING INFORMATION

The tabulations that follow contain part numbers and specifications for ordering relays. To order, consult the tabulations. Determine the coil resistance and contacts required and then order by part number specified. To aid in identification, specify the contacts and coil resistance selected along with the part number when ordering.

Order should specify if wall mounting brackets and or plug couplers are required.

Energization voltage, as shown in the tabulations, is the value at which the relay assumes the full energized position.

DP-25 VITAL SHELF POLARIZED RELAY

PART NUMBER	CONTACTS		COIL RESIS. OHMS	ENERGIZATION VOLTAGE
	NEUTRAL	POLAR		
N312692	2F M.H.D.	2NR S.I.C. 2NR S-S	280	6.02
N312693	2F M.H.D.	2NR S.I.C. 2NR S-S	450	7.65
N312694	2F M.H.D.	2NR S.I.C. 2NR S-S	1000	12.0

M.H.D. - Heavy Duty with Magnetic Blowouts

NOTE: For Detail Parts and additional Information, refer to Service Manual: SM-2378-K and SM-2378.

VITAL SHELF DC LINE RELAYS
(Polarized)

DP-14 DP-21

All neutral contacts are Standard: silver to silver-impregnated carbon front and silver to silver back. Polar contacts are S.I.C.: silver to silver-impregnated carbon for normal and reverse and have a 4-ampere capacity at 30 volts dc or 175 volts ac.

All relays are shock mounted for shelf or wall mounting. Connections can be made direct or through plug couplers that permit quick removal and replacement.

The DP-14 Relay is an ordinary acting polarized dc line relay for general use in line circuits requiring a polarized relay. The DP-21 is a retained neutral polarized dc relay which retains the neutral armature in the energized position during ordinary periods required to pole change the relay circuit.

The DP-14 Relay is also available for track circuit application as described in Catalog Section RSE-5B3.

DP-14 RELAY

The DP-14 Polarized DC Relay is designed to meet the requirements for general use in polarized line circuits. It features simplicity of construction and superior calibration. Contact arrangements are four neutral with two polar contacts or four neutral with four polar contacts. These relays are available with low voltage contacts.

The polar armature of this relay remains in the last energized position and maintains full pressure on polar contacts. It features a large permanent magnet which provides greater clearances between moving parts and higher polar contact pressure.

DP-21 RELAY

The DP-21 Relay contains the features of the DP-20 Relay. In addition, it provides slow pickup of the neutral armature.

Contact arrangements are four neutral with two polar or four polar, and six neutral with four polar contacts. All contacts are low voltage.

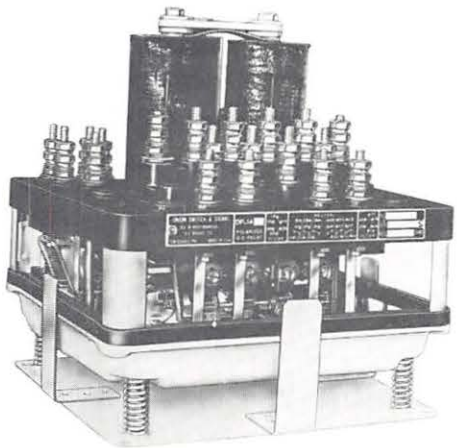

DP-14 RELAY

	2NR	4NR
Height	9-7/8″	9-5/8″
Width	7-3/8″	9″
Depth	7-3/4″	9″

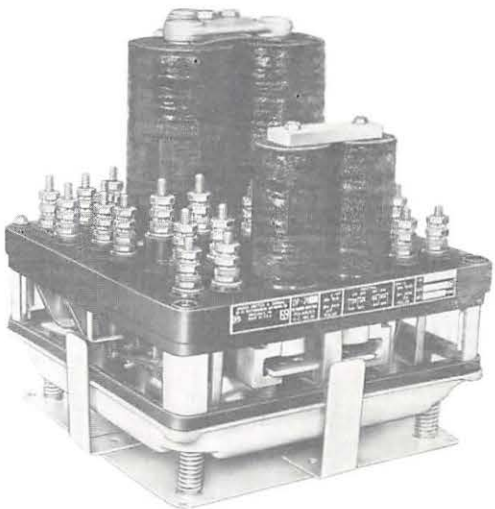

DP-21 RELAY

	4FB	6FB
Height	10-1/2″	10-1/2″
Width	9″	10″
Depth	9″	9″

ORDERING INFORMATION

The tabulations that follow contain part numbers and specifications for ordering relays. To order, consult the tabulations. Determine the coil resistance and contacts required and then order by part number specified. To aid in identification, specify the contacts and coil resistance selected along with the part number when ordering.

Order should specify if wall mounting brackets and or plug couplers are required.

Energization voltage, as shown in the tabulations, is the value at which the relay assumes the full energized position.

DP-14 VITAL SHELF POLARIZED DC LINE RELAY (ORDINARY ACTING)

PART NO.	CONTACTS		COIL RESIS. OHMS PER PAIR	ENERGIZATION		RECOMMENDED WORKING VOLTAGE FOR 0.9 SEC. REV. TIME
	NEUTRAL	POLAR		POLAR ARMATURE VOLTAGE	NEUTRAL ARMATURE VOLTAGE	
N294218	Without	2NR S.I.C.	10	0.31	†	†
N174609	4FB Std.	4NR S.I.C.	250	1.87	4.10	5.22

NOTE: For Detail Parts and additional Information, refer to Service Manual: SM-2378-G and SM-2378.

†Not applicable

DP-21 VITAL SHELF POLARIZED DC LINE RELAY (RETAINED NEUTRAL)

PART NO.	CONTACTS		COIL RESIS. OHMS PER PAIR		ENERGIZATION		REC. MIN. WORKING VOLTAGE FOR 0.2 SEC. POLE CHANGING TIME
	NEUTRAL	POLAR	MAIN	AUX.	POLAR ARMATURE VOLTAGE	NEUTRAL ARMATURE VOLTAGE	
N187490	4FB Std.	2NR S.I.C.	250	270	2.10	3.29	3.84
N194313	4FB Std.	2NR S.I.C.	250	270	2.10	3.29	3.84
N228105	4FB Std.	4NR S.I.C.	400	270	2.44	4.35	5.00
N213977	4FB Std.	4NR S.I.C.	670	270	3.02	5.40	6.30

NOTE: For Detail Parts and additional Information, refer to Service Manual: SM-2745-A.

VITAL SHELF DC TRACK RELAYS
(Biased)

DN-11B DN-22B DN-22BH

The DN-11B and DN-22B Relays contained in this catalog section are biased track relays. The DN-11B Relay is available as a 4-contact relay while the DN-22B is a 2 contact relay for applications where the larger number of contacts is not required.

The DN-22BH Relay is a quick shunting track relay especially useful in applications where short lightweight trains are in use at high speeds. It is a biased high efficiency relay designed specifically for track circuit application requiring high shunting sensitivity.

The DN-11B and DN-22B Relays are also available for line circuit applications as described in Catalog Section RSE-5A1.

DN-11B RELAY

HEIGHT	8-5/8″
WIDTH	6-1/4″
DEPTH	6-1/4″

DESCRIPTION

The DN-11B, DN-22B and DN-22BH are biased track relays which respond only to the proper voltage polarity. This feature offers an added measure of foreign current protection and also insulated joint failure protection. The latter is accomplished by staggering the polarities of adjacent track circuits.

The DN22-BH Relay has a high dropaway to pickup current ratio. This characteristic increases the shunting sensitivity of the track circuit in which the relay is employed.

DN-22B & DN-22BH

HEIGHT	8″
WIDTH	4″
DEPTH	6-1/4″

CONTACTS

The DN-11B Relay has four FB contacts. The DN-22B Relay and the DN-22BH Relay each have two FB contacts. Contacts are Standard, silver to silver-impregnated carbon front and silver to silver back. These contacts have a 4 ampere capacity at 30 volts dc. or 175 volts ac.

ORDERING INFORMATION

The tabulations that follow contain part numbers and specifications for ordering relays. To order, consult the tabulations. Determine the coil resistance and contacts required and then order by part number specified. To aid in identification, specify the contacts and coil resistance selected along with the part number when ordering.

Order should specify if wall mounting brackets and or plug couplers are required.

Energization amperes and voltage, as shown in the tabulations, are the values at which the relay assumes the full energized position.

4 CONTACT DN-11B VITAL SHELF BIASED DC TRACK RELAY

PART NO.	CONTACTS	COIL RESIS. OHMS	MIN. FULL D.A. AMPS	ENERGIZATION	
				AMP.	VOLTAGE
N378639	4FB Std.	0.5	0.072	0.221	0.110
N274064	4FB Std.	2	0.036	0.110	0.220
N274069	4FB Std.	500	1.220	0.0075	3.750
N274070	4FB Std.	1000	1.840	0.0056	5.640

NOTE: For Detail Parts and additional information, refer to Service Manual; SM;2444-Z2.

2 CONTACT DN-22B VITAL SHELF BIASED DC TRACK RELAY

PART NO.	CONTACTS	COIL RESIS. OHMS	MIN. FULL D.A. VOLTAGE	ENERGIZATION	
				AMP.	VOLTAGE
N272937	2FB Std.	500	1.17	0.62	3.09

NOTE: For Detail Parts and additional Information, refer to Service Manual: SM-2666-J.

2-CONTACT DN-22BH VITAL SHELF BIASED DC TRACK RELAY (HIGH DROPAWAY)

PART NO.	CONTACTS	COIL RESIS. OHMS	MIN. D.A. (FRONT OPEN)		ENERGIZATION		MIN. FULL D.A. AMP.
			AMP.	VOLTAGE	AMP.	VOLTAGE	
N268030	2FB Std.	0.5	0.256	0.128	0.32	0.16	0.171
N267247	2FB Std.	4	0.092	0.37	0.115	0.46	0.061
*N373702	2FB Std.	500	0.0087	4.35	0.011	5.50	0.0058

*Relay recommended for use with AFO equipment.

NOTE: For Detail Parts and additional Information, refer to Service Manual: SM-2666-K.

VITAL SHELF DC TRACK RELAYS
(Neutral)

DN-11 DN-22

This catalog section covers DN-11 and DN-22 Neutral DC Track Relays. The DN-11 Relay has wide application in track circuits requiring an ordinary acting neutral relay with 4-, or 6-contacts.

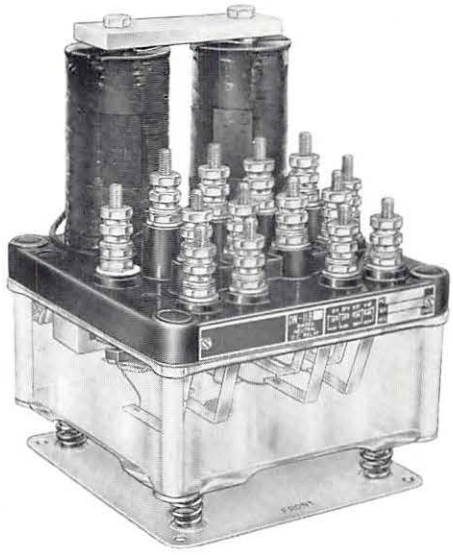

DN-11 RELAY (4-CONTACT)

HEIGHT	8-5/8″
WIDTH	6-1/4″
DEPTH	6-1/4″

(6 CONTACT)

HEIGHT	8-5/8″
WIDTH	7-5/8″
DEPTH	6-1/4″

DN-11 RELAY

The low voltage contacts are Standard: silver to silver-impregnated carbon front and silver to silver back; or S.I.C. silver to silver-impregnated carbon for both front and back. These contacts have a 4-ampere capacity at 30 volts dc or 175 volts ac.

Contacts are Standard: silver to silver-impregnated carbon front and silver to silver backs. S.I.C. contacts are also available and are designated in the tabulation. These contacts have a 4-ampere capacity at 30 volts dc or 175 volts ac.

These relays have compound spring contacts to improve back contact performance during vibrations.

DN-11 Relays are supplied with shock absorbers for shelf mounting. Wall mounting brackets with shock absorbers will be supplied when specified on order. Connections to the relays can be made directly or through plug couplers that permit quick connections to the terminals for removal and replacement.

DN-22 RELAY

HEIGHT	8-1/8″
WIDTH	4″
DEPTH	6-3/8″

DN-22 RELAY

The DN-22 Relay is also an ordinary acting neutral relay and is available in a 2-contact configuration for applications where a large amount of contacts are not required.

Contacts are Standard: silver to silver-impregnated carbon front and silver to silver backs. These contacts have a 4-ampere capacity at 30 volts dc or 175 volts ac.

The DN-11 and DN-22 Relays may also be used in line circuits as described in Catalog Section RSE-5A2.

UNION SWITCH & SIGNAL

ORDERING INFORMATION

The tabulations that follow contain part numbers and specifications for ordering relays. To order, consult the tabulations. Determine the coil resistance and contacts required and then order by part number specified. To aid in identification, specify the contacts and coil resistance selected along with the part number when ordering.

Order should specify if wall mounting brackets and or plug couplers are required.

Energization amperes and voltage, as shown in the tabulations, are the values at which the relay assumes the full energized position.

4-CONTACT DN-11 VITAL SHELF NEUTRAL DC TRACK RELAY

PART NO.	CONTACTS	COIL RESIS. OHMS	MIN. FULL D.A. AMPS.	ENERGIZATION AMPS.
N163068	4FB Std.	0.5	0.108	0.206
N212441	4FB Std.	1.0	0.074	0.140
N152232	4FB Std.	2.0	0.054	0.103
N150956	4FB Std.	4.0	0.037	0.070
N164255	4FB Std.	1.0 QA*	0.12	0.240

*Quick Acting
Special contacts have S.I.C. fronts and H.D. backs.

NOTE: For Detail Parts and additional Information, refer to Service Manual: SM-2444 and SM-2444-Z1.

6-CONTACT DN-11 VITAL SHELF NEUTRAL DC TRACK RELAY (ORDINARY ACTING)

PART NO.	CONTACTS	COIL RESIS. OHMS	MIN. FULL D.A. AMPS.	ENERGIZATION AMPS.
N161744	6FB Std.	2.0	0.060	0.134

NOTE: For Detail Parts and additional Information, refer to Service Manual: SM-2444-B, SM-2444, and SM-2444-Z1.

PART NO.	CONTACTS	COIL RESIS.OHMS	MIN. D.A. AMPS	MAX. P.U. AMPS.	ENERGIZATION AMPS.
N142676	6FB Std.	4.0	0.0405	0.074	0.097

NOTE: For Detail Parts and additional Information, refer to Service Manual: SM-2444 and 2444-Z1.

2-CONTACT DN-22 VITAL SHELF NEUTRAL DC TRACK RELAY (ORDINARY ACTING)

PART NO.	CONTACTS	COIL RESIS. OHMS	MIN. FULL D.A.		ENERGIZATION	
			AMPS.	VOLTAGE	AMPS.	VOLTAGE
N224087	2FB Std.	0.5	0.106	0.053	0.186	0.093
N224089	2FB Std.	4.0	0.037	0.148	0.065	0.260

NOTE: For Detail Parts and additional Information, refer to Service Manual: SM-2666.

VITAL SHELF DC TRACK RELAYS
(Polarized)

DP-14

This polarized relay, designed to meet the requirements for general use in polarized track circuits, features simplicity of construction and superior calibration. Contact arrangements are four neutral with two polar contacts or four neutral with four polar contacts. These relays are available with low voltage contacts.

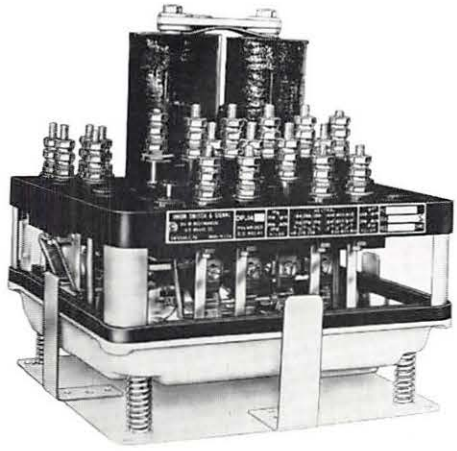

The polar armature of this relay remains in the last energized position and maintains full pressure on polar contacts.

The DP-14 Relay features a large permanent magnet which provides greater clearances between moving parts and higher polar contacts pressure.

DP-14 RELAY

	2NR	4NR
Height	9-7/8″	9-5/8″
Width	7-3/4″	9″
Depth	7-3/4″	9″

CONTACTS

Neutral contacts are Standard: silver to silver-impregnated carbon front and silver to silver backs. Polar contacts are silver to silver-impregnated carbon for both normal and reverse. These contacts have a 4-ampere capacity at 30 volts dc or 175 volts ac.

MOUNTING INFORMATION

These relays are shock mounted for shelf or wall mounting. Connections to the relays can be made directly or through plug couplers that permit quick connections to the terminals for removal and replacement.

ORDERING INFORMATION

The tabulations that follow contain part numbers and specifications for ordering relays. To order, consult the tabulations. Determine the coil resistance and contacts required and then order by part number specified. To aid in identification, specify the contacts and coil resistance selected along with the part number when ordering.

Order should specify if wall mounting brackets and or plug couplers are required.

Energization amperes, as shown in the tabulations, is the value at which the relay assumes the full energized position.

PART NO.	CONTACTS		COIL RESIS. OHMS PER PAIR	MIN. D.A. AMPS	RECOMMENDED WORKING AMPS FOR 0.9 SEC. REV. TIME
	NEUTRAL	POLAR			
N163686	4FB Std.	4NR S.I.C.	1000	.0034	.0128

NOTE: For Detail Parts and additional Information, refer to Service Manual: SM-2378.

VITAL SHELF SWITCH OVERLOAD CONTROL RELAYS (D.C.)

OR-10 OR-11

OR-10 RELAY

The OR-10 is a single coil, slow acting, non-stick dc operated relay. A thermal resistor across its coil is used to monitor motor operating current and divert an amount sufficient to operate the OR-10 when necessary to protect the motor from damage.

The OR-10 when operated, will energize another relay (or relays) controlling the motor energy supply so that motor direction must be reversed to reapply control energy.

OR-11 RELAY

The OR-11 is a two winding, slow acting, stick type dc operated relay. The relay operates the same as the OR-10 except that it sticks up over its own front contact until the relay controlling motor direction is reversed.

CONTACTS

OR-10 and OR-11 Relays employ silver to silver contacts rated at 4 amps, 30 volts dc or 175 volts ac.

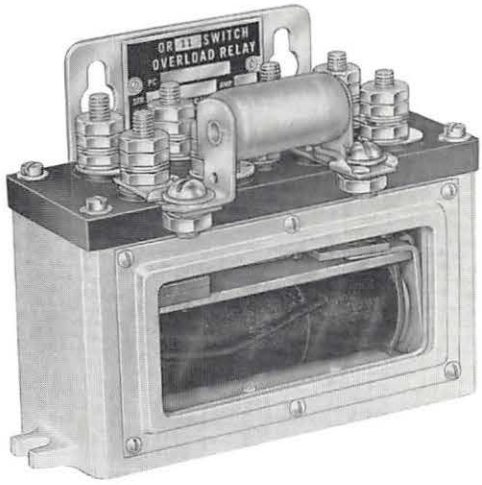

TYPICAL OR RELAY

HEIGHT	4-3/4″
WIDTH	2-1/4″
DEPTH	6″

ORDERING INFORMATION

The tabulations that follow contain part numbers and specifications for ordering relays. To order, consult the tabulations. Determine the coil resistance and contacts required and then order by part number specified. To aid in identification, specify the contacts and coil resistance selected along with the part number when ordering.

Order should specify if wall mounting brackets and or plug couplers are required.

Energization amperes, as shown in the tabulations, is the value at which the relay assumes the full energized position.

OR-10 VITAL SHELF OVERLOAD RELAY [DC]

PART NUMBER	COIL RESIS. OHMS
N185351	5.0

NOTE: For Detail Parts and additional Information, refer to Service Manual: SM-3287.

OR-11 VITAL SHELF SWITCH OVERLOAD RELAY [DC]

PART NUMBER	COIL RESIS. OHMS	ENERGIZATION SEC. / AMPS	
N295420	0.0135	6 Sec. @ 20A	25 Sec.@ 15A
N248583	0.021	12 Sec. @ 16A	17 Sec. @ 11.5A
N295421	0.036	8 Sec. @ 12A	40 Sec. @ 8A

NOTE: For Detail Parts and additional Information, refer to Service Manual: SM-3287.

VITAL SHELF SWITCH OVERLOAD CONTROL RELAYS (A.C.)

OR-20

The OR-20 is an overload relay designed for use on a 60 Hz, 120 volts source. It consists of an ac relay, rectifier, thermal unit and dc relay.

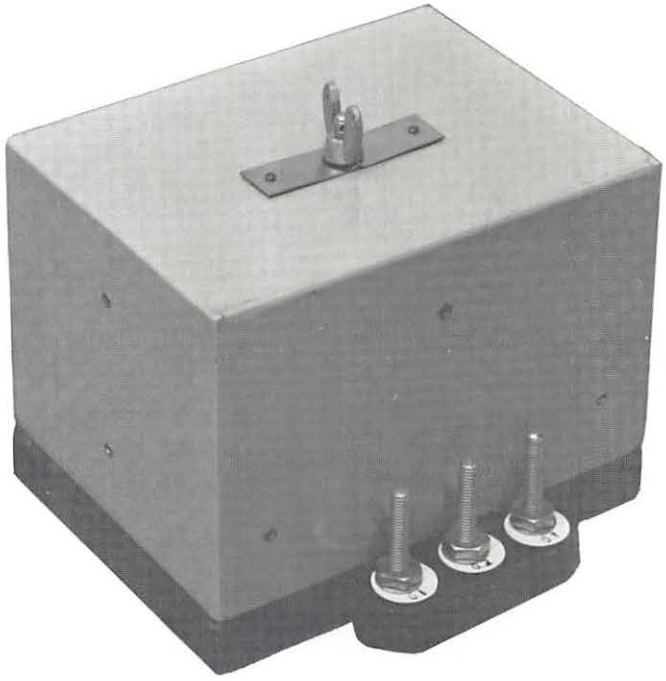

Excessive motor current causes the thermal unit to divert ac through the rectifier building to a magnitude sufficient to energize the dc relay. The dc relay picking up causes the ac control relay to operate which opens the motor control circuit. A stick contact of the ac relay holds it energized until the switch control is reversed.

CONTACTS

The ac relay used in the OR-20 employs silver to silver-impregnated carbon contacts designed to carry motor slip clutch current. The dc relay employs silver to silver contacts.

ORDERING INFORMATION

The tabulations that follow contain part numbers and specifications for ordering relays. To order, consult the tabulations.

Order should specify if wall mounting brackets and or plug couplers are required.

Energization amperes, as shown in the tabulations, is the value at which the relay assumes the full energized position.

OR-20 VITAL SHELF OVERLOAD RELAY

PART NUMBER	VOLTAGE	FREQUENCY	ENERGIZATION / SEC. AMPS
N190093	110V	60 Hertz	20 Sec. @ 8A

VITAL SHELF CODE RELAYS
(Code Transmitting)

DM

The DM Relays are code transmitter relays used for various wayside signaling installation. Basic code rates of 75, 120, and 180 cycles per minute (CPM) are available.

DM RELAY

HEIGHT 10-5/8″
DIAMETER 7″

DESCRIPTION

The DM code transmitter relays covered in this catalog section are 75, 120, and 180 CPM code generating relays. 2- and 4- contact arrangements are available with high and low voltage combinations as listed.

Three types of contacts are available in the DM relays; Silver platinum to silver platinum for use in circuits below 50 volts and tungsten to tungsten for use in circuits above 50 volts to provide longer contact life. However, the tungsten contacts cannot be employed in low voltage circuits due to the contact resistance which they develop. The special contact is a combination of the foregoing which has a tungsten front and silver platinum back.

The terminal posts on the relay are labeled with green tags on the silver platinum contacts and red tags on the tungsten contacts to provide easy identification during installation and inspection. White tags are used on the control terminals and on the heel terminal of special contacts.

Connections to the relays can be made directly or through plug couplers that permit quick connections to the terminals for removal and replacement.

ORDERING INFORMATION

The tabulations that follow contain part numbers and specifications for ordering relays. To order, consult the tabulations. Determine the coil resistance and contacts required and then order by part number specified. To aid in identification, specify the contacts and coil resistance selected along with the part number when ordering.

Order should specify if wall mounting brackets and or plug couplers are required.

Energization voltage, as shown in the tabulations, is the value at which the relay assumes the full energized position.

DM VITAL SHELF CODE TRANSMITTER (75 CODE)

PART NO.	CONTACTS	COIL RESIS. OHMS	SYSTEM VOLTAGE
N242041-001	4FB*	55	8-12
N242043	4FB**	55	8-12

CONTACTS: * Silver platinum to silver platinum
**Tungsten to tungsten

NOTE: For Detail Parts and additional Information, refer to Service Manual: SM-5454.

DM VITAL SHELF CODE TRANSMITTER (120 CODE)

PART NO.	CONTACTS	COIL RESIS. OHMS	SYSTEM VOLTAGE
N221553-001	2FB	510	8-12
N221558	4FB	55	8-12
N221560	4FB	55	8-12

CONTACTS: Silver platinum to silver platinum

NOTE: For Detail Parts and additional Information, refer to Service Manual: SM-5454.

DM VITAL SHELF CODE TRANSMITTER (180 CODE)

PART NO.	CONTACTS	COIL RESIS. OHMS	SYSTEM VOLTAGE
N221552	2FB*	55	8-12
N221559	4FB*	55	8-12
N297120	2FB*	55	8-12
N221561	2FB Special 2FB	55	8-12
N221557	2FB** 4FB**	55	8-12

CONTACTS: * Silver platinum to silver platinum
**Tungsten to tungsten
Special: Front - Tungsten to tungsten
Back - Silver platinum to silver platinum

NOTE: For Detail Parts and additional Information, refer to Service Manual: SM-5454.

VITAL SHELF CODE RELAYS
(Code Following)

CD CDP P-4
DN-18C DN-22C

The relays covered in this catalog section are a series of code following relays for use in coded wayside signal systems and coded cab signal control.

CD RELAY

The CD Relay is an ordinary acting, two-position, dc biased relay designed to follow dc coded energy of a definite polarity. The relay picks up during the ON period of the code and is de-energized during the OFF period of the code.

This relay may be operated continuously because it contains no trunnions for its moving parts. The moving parts are suspended by springs which have no wear, and all engaging parts, except the contacts, are chromium plated.

The electrical and mechanical design of the relay produces a very fast relay, capable of following high code speeds with minimum distortion. A strong permanent magnet is used, which provides an efficient relay having a high degree of stability.

CDP RELAY

The CDP Relay is a magnetic stick, code following dc relay. In construction, the relay is similar to the CD Relay, and all parts in the two relays are interchangeable except contact springs, armature, and nameplate. The armature of the CDP Relay remains at full-stroke in its last energized position, which differs from the CD Relay. When used as a code following relay, the CDP Relay responds to polarity reversals of the applied voltage and not to ON and OFF periods of voltage. It is generally used to transmit a "corrected code"; compensating for code transmitter wear.

P-4 RELAY

The P-4 Relay is a biased, high efficiency, sensitive, code following relay. It is made in two general categories - Track and Line. The track version permits coded track circuits up to 11,000 feet in length. It is also valuable for conserving power when used in primary battery, coded track circuits.

DN-18C RELAY

The DN-18C Relay is similar to the DN-18 Relay described in section RSE-5A3. The DN-18C is designed for use with mechanical rectification in coded wayside circuits. They have two large coils and small copper ferrules to provide the required timing characteristics of the mechanically rectified decoding circuit.

DN-22C RELAY

The DN-22C Relay is a special DN-22 Relay used as a decoding relay in coded wayside circuits. In general, the DN-22C has special calibration values.

CONTACTS

The CD, CDP, and P-4 relays have three types of contacts. Silver platinum to silver platinum for use in circuits below 50 volts and tungsten to tungsten for use in circuits above 50 volts to provide longer contact life. However, the tungsten contacts cannot be employed in low voltage circuits due to the contact resistance which they develop. The special contact is a combination of the foregoing which has a tungsten front and silver platinum back.

The DN-18C Relay and the DN-22C Relay have silver platinum to silver platinum contacts.

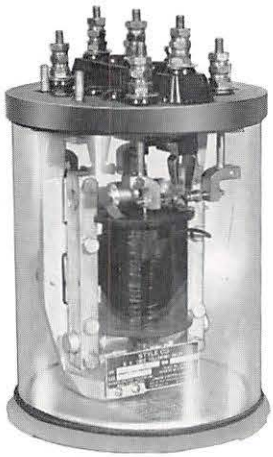

CD RELAY

HEIGHT	10-5/8″
DIAMETER	7″

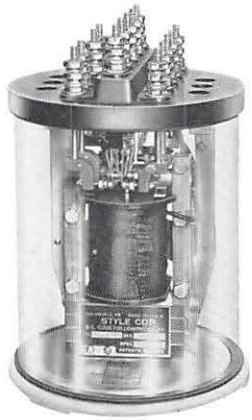

CDP RELAY

HEIGHT	10-5/8″
DIAMETER	7″

P-4 RELAY

HEIGHT	8″
DIAMETER	4½″

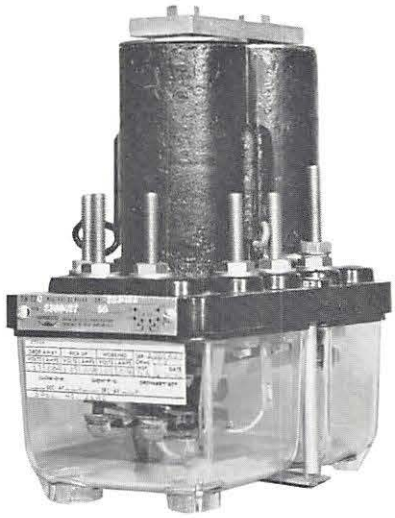

DN-22C RELAY

HEIGHT	8-9/32″
WIDTH	4″
DEPTH	6-3/8″

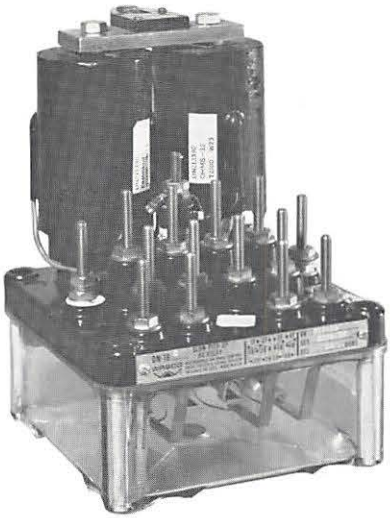

DN-18C RELAY

	4FB	6FB
HEIGHT	8-1/4″	8-1/4″
WIDTH	6-1/4″	7-5/8″
DEPTH	6-1/4″	6-1/4″

ORDERING INFORMATION

The tabulations that follow contain part numbers and specifications for ordering relays. To order, consult the tabulations. Determine the coil resistance and contacts required and then order by part number specified. To aid in identification, specify the contacts and coil resistance selected along with the part number when ordering.

Order should specify if wall mounting brackets and or plug couplers are required.

Energization amperes and voltage, as shown in the tabulations, are the values at which the relay assumes the full energized position.

2 CONTACT CD VITAL SHELF CODE FOLLOWING RELAY (ORDINARY ACTING)

PART NO.	CONTACTS	COIL RESIS. OHMS	RECOMMENDED WORKING	
			AMPS.	VOLTS
N232752	2FB	0.30	0.820	†

CONTACTS: Silver platinum to silver platinum

NOTE: For Detail Parts and additional Information, refer to Service Manual: SM-5400B.

†Not applicable

4 CONTACT CD VITAL SHELF CODE CODE FOLLOWING RELAY (ORDINARY ACTING)

PART NO.	CONTACTS	COIL RESIS. OHMS	RECOMMENDED WORKING	
			AMPS	VOLTS
N232753	4FB*	0.30	0.820	†
N275968	4FB*	0.30/400	0.820	†
N210440	4FB*	18.5	0.090	†
N216174	4FB*	225.0		10/12
N207810	1FB**	18.5	0.090	
	3FB*			
N223414	4FB*	135.0		8/12

CONTACTS: * Silver platinum to silver platinum
** Tungsten to tungsten

NOTE: For Detail Parts and additional Information, refer to Service Manual: SM-5400B.

†Not applicable

CDP VITAL SHELF CODE FOLLWING RELAY (MAGNETIC STICK)

PART NO.	CONTACT	COIL RESIS. OHMS	RECOMMENDED WORKING VOLTS
N265760	4NR	135	8/12
N382761	2N**	20/20	†
	2N & 4R*		

CONTACTS: * Silver platinum to silver platinum
** Tungsten to tungsten

NOTE: For Detail Parts and additional Information, refer to Service Manual: SM-5465C and SM-5465.

†Not applicable

P-4 VITAL SHELF CODE FOLLOWING RELAY (HIGH EFFICIENCY)

PART NO.	CONTACTS	COIL RESIS. OHMS	P.U. AMPS MIN.	P.U. AMPS MAX.	RECOMMENDED WORKING AMPS
TRACK					
N222391	2FB	0.30			0.425
N222390	2FB	0.30			0.320
N264821	1FB	0.30			0.215
C.T.C.					
N216112	1N, 1R	1900			0.0044
APPROACH CONTROL					
N273463	1F	0.30/15	0.198	0.202	†

[a] - at .007 contact compression
[b] - at .015 contact compression

CONTACTS: Silver platinum to silver platinum

NOTE: For Detail Parts and additional Information, refer to Service Manual: SM-5473.

†Not applicable

4 CONTACT DN-18C VITAL SHELF CODE FOLLOWING RELAY

PART NO.	CONTACTS	COIL RESIS. OHMS	MINIMUM D.A. AMP.	MINIMUM D.A. VOLTAGE	ENERGIZATION AMP.	ENERGIZATION VOLTAGE
N217453	4FB.	64/pair	0.0115	0.736	0.100	6.4

CONTACTS: Silver platinum to silver platinum

NOTE: For Detail Parts and additional Information, refer to Service Manual: SM-2390 and SM-2390-C.

6 CONTACT DN-18C VITAL SHELF CODE FOLLOWING RELAY (ORDINARY ACTING)

PART NO.	CONTACTS	COIL RESIS. OHMS	MINIMUM D.A. AMP.	MINIMUM D.A. VOLTAGE	ENERGIZATION AMP.	ENERGIZATION VOLTAGE
N217454	6FB.	64/pair	0.0115	0.736	0.100	6.4

CONTACTS: Silver platinum to silver platinum

NOTE: For Detail Parts and additional Information, refer to Service Manual: SM-2390.

2 CONTACT DN-22C VITAL SHELF CODE FOLLOWING RELAY (ORDINARY ACTING)

PART NO.	CONTACTS	COIL RESIS. OHMS	MINIMUM D.A. AMP.	MINIMUM D.A. VOLTAGE	ENERGIZATION AMP.	ENERGIZATION VOLTAGE
N223421	2FB.	100	0.0117	1.17	0.0220	2.22
N224080	2FB.	55	0.0104	0.57	0.0198	1.09
N265686	2FB.	200	0.0057	1.14	0.0108	2.16

CONTACTS: Silver platinum to silver platinum

NOTE: For Detail Parts and additional Information, refer to Service Manual: SM-2666.

CONTROL RELAYS
(Flasher)

FN-16A **FN-27** **FL-28**

The relays covered in this catalog section are used for flashing signal lamps. The FN-16A is designed for flashing grade crossing signals. The FN-27 and FL-28 Relays are designed for flashing railway signaling aspects.

FN-16A RELAY

The FN-16A Relay has two coils which are internally controlled to alternate the armature at a nominal 45 cycles per minute in a 10 to 12 volt dc system. The armature operates four transfer contacts which are used in external circuitry to control grade crossing signal lamps

Contacts are low voltage silver alloy with a 10 ampere capacity each.

The operating coils are equipped with a rectifier for supression of radio interference originating in the self-operating contact.

FN-27 RELAY

The FN-27 Relay is a small-size flasher relay used for providing wayside flashing signal aspects. It has two dependent normal and reverse contacts of silver alloy, rated at 2.5 amperes per contact. In addiiton, two control contacts for alternately shunting the relay coils are provided. The relay operates with equal "on" and "off" periods assuring a very uniform flashing light aspect. The flashing rate can be quickly and accurately adjusted over a range of approximately 40 to 60 flashes per minute.

FL-28 RELAY

The FL-28 Relay consists of two internal relays which operate each other causing one of the relays to operate at 50 cycles per minute, with equal front and back periods. A transfer and a back contact of this relay are then used in external circuitry to obtain flashing aspects on wayside signals.

Contacts are silver palladium with a capacity of 2.5 amperes.

FN-16A RELAY

HEIGHT	7-1/2"
WIDTH	7-5/8"
DEPTH	6-1/2"

FN-27 RELAY

FL-28 RELAY

HEIGHT	5-3/4"
WIDTH	4-1/8"
DEPTH	7-1/4"

ORDERING INFORMATION

The tabulations that follow contain part numbers and specifications for ordering relays. To order, consult the tabulations. Determine the coil resistance and contacts required and then order by part number specified. To aid in identification, specify the contacts and coil resistance selected along with the part number when ordering.

Order should specify if wall mounting brackets and or plug couplers are required.

Energization voltage, as shown in the tabulations, is the value at which the relay assumes the full energized position.

FN-16A VITAL SHELF FLASHER RELAY

PART NO.	CONTACTS	COIL RESIS OHMS	SYSTEM VOLTAGE	MIN. OPERATING VOLTAGE	FLASHES PER LAMP PER MIN.
N265738	4NR	500/500	10-12	8.5	50 (Nominal)
N265739	4NR	200/200	10-12	6.0	50 (Nominal)
Contacts - silver alloy					

NOTE: For Detail Parts and additional Information, refer to Service Manual: SM-3151.

FN-27 VITAL SHELF FLASHER RELAY

PART NO.	CONTACTS	COIL RESIS OHMS	SYSTEM VOLTAGE	MIN. OPERATING VOLTAGE	FLASHES PER LAMP PER MIN.
N280688	2N & 2R	85	10 - 12	8.0	40 - 60
Contacts - silver alloy					

NOTE: For Detail Parts and additional Information, refer to Service Manual: SM-4519 and SM-4519A.

FL-28 VITAL SHELF FLASHER RELAY

PART NO.	CONTACTS	COIL RESIS OHMS	SYSTEM VOLTAGE	MIN. OPERATING VOLTAGE	FLASHES PER LAMP PER MIN.
N396250	1FB 1B	150	10-12	8.0	50 [Nominal]
Contacts - Silver palladium					

NOTE: For Detail Parts and additional Information, refer to Service Manual: SM-4579.

CONTROL RELAYS
(Time Element)

DT-10 TH-10

The DT-10 and TH-10 Relays are designed for use when time intervals must be measured. The DT-10 Relay is a mechanical unit which operates four transfer contacts at the completion of the set time interval. The TH-10 Relay is a thermal relay which closes one normally open contact at the completion of the set time. In addition, the cooling time can also be used, through the use of external circuitry, to obtain a second range of time intervals.

DT-10 TIME ELEMENT RELAY

The DT-10 is a timing relay with ranges from 2 to 24 minutes. It is a mechanical timer which closes the front contacts of four transfer contacts upon completion of the time interval. It has one independent back contact which can be used in external circuits to check that the full time interval will be run for each operation. These relays are available with standard low voltage contacts only.

Contacts are Standard: silver to silver-impregnated carbon front and silver to silver backs. These contacts have a 4-ampere capacity at 30 volts dc or 175 volts ac.

TH-10 TIME ELEMENT THERMAL RELAY

The TH-10 Relay is a time element relay which is offered in six different timing ranges as shown in the tabulation on the back page. The front contact closes at the end of the heating interval and the back contact recloses when the thermal element has cooled.

The TH-10 Relay is temperature compensated to minimize the effect of changing ambient temperature. Power consumption during the heating period is approximately 10 watts. This relay can be operated from either ac or dc voltage. The TH-10 Relay is available with silver to silver contacts. This relay is designed for wall mounting only.

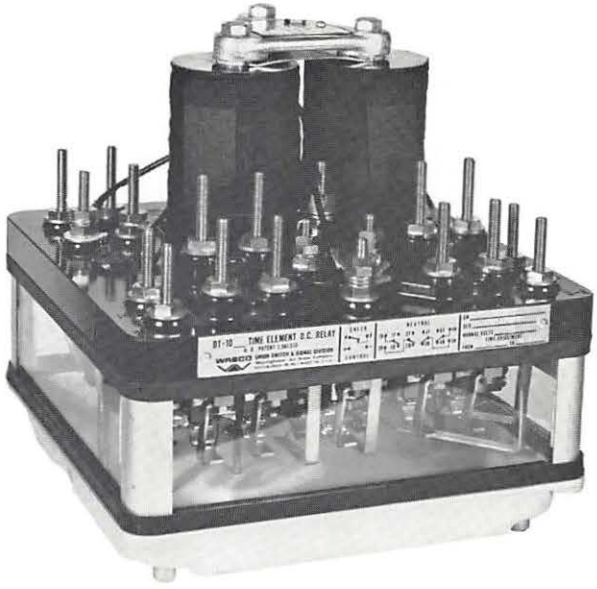

DT-10 RELAY

HEIGHT	9-3/16"
WIDTH	9"
DEPTH	9"

TH-10 RELAY

HEIGHT	6-1/2"
WIDTH	3-3/4"
DEPTH	4"

ORDERING INFORMATION

The tabulations that follow contain part numbers and specifications for ordering DT-10 and TH-10 Relays. To order a DT-10 Relay, select the coil resistance and order by the part number specified. To aid in identification, specify the coil resistance selected along with the part number.

Wall mounting brackets and plug couplers are available for the DT-10 Relay only. The order for the DT-10 Relays should specify the wall mounting brackets and plug couplers if required.

To order a TH-10 Relay, select the relay with the desired timing required and then order by the part number given. Specify the timing information of the relay on the order to aid in the identification of the relay.

TH-10 TIME ELEMENT RELAY (THERMAL)

PART NO.	CONTACTS	SYSTEM VOLTAGE	FRONT* TIME SEC.		TOTAL** TIME SEC.	
			MIN.	MAX.	MIN.	MAX.
N183881	1F, 1B S-S	10	10	18	45	70
N183883	1F, 1B S-S	10	10	18	80	110
N183884	1F, 1B S-S	10	15	27	70	110
N183885	1F, 1B S-S	10	25	35	110	135
N187707	1F, 1B S-S	10	60	80	180	220
N267940	1F, 1B S-S	10	5	12	25	45

*Front time is the heating portion of the cycle which is adjustable between minimum and maximum and is measured the instant energy is applied until the front contact closes.

**Total time is the time for a complete cycle which assumes the relay operated by the front contact will immediately cut off the heater current. The total time interval is dependent on the front contact time adjustment.

NOTE: For Detail Parts and additional Information, refer to Service Manual: SM-2722.

DT-10 TIME ELEMENT RELAY

PART NO.	CONTACTS	SYSTEM VOLTAGE	COIL RESISTANCE OHMS per pair		TIME INTERVAL MINUTES	
			NEUTRAL.	MAIN	MIN.	MAX.
N160333	4FB Std.	10	28	550	0.5	6.0
N164369	4FB Std.	12	48	800	0.5	6.0
N180723	4FB Std.	10	28	550	2.0	24.0
N185066	4FB Std.	10	28	550	1.0	12.0
N210269	4FB Std.	8	18	350	1.0	12.0
N287431	4FB Std.	12	48	800	2.0	24.0

NOTE: For Detail Parts and additional Information, refer to Service Manual: SM-2365.

CONTROL RELAY
(Light Out)

DN-22L

The DN-22L Relay is a light-out relay which is used in series with a lamp to indicate that it is intact and lighted. It can be seen from the tabulations that very low resistance coils are employed on these relays so the lamp intensity is not noticeably reduced. The relay coil is shunted with a half-wave rectifier to permit use in either ac or dc lighting schemes. This relay is available with low voltage contacts only.

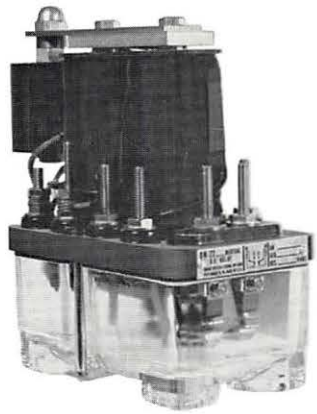

DN-22L RELAY

HEIGHT	7-5/8″
WIDTH	4″
DEPTH	6-3/8″

CONTACTS

Contacts are Standard: silver to silver-impregnated carbon front and silver to silver backs. These contacts have a 4-ampere capacity at 30 volts dc or 175 volts ac.

ORDERING INFORMATION

The tabulations that follow contain part numbers and specifications for ordering relays. To order, consult the tabulations. Determine the coil resistance and contacts required and then order by part number specified. To aid in identification, specify the contacts and coil resistance selected along with the part number when ordering.

Order should specify if wall mounting brackets and or plug couplers are required.

Energization amperes and voltage, as shown in the tabulations, are the values at which the relay assumes the full energized position.

PART NO.	CONTACTS	COIL RESIS. OHMS	FREQ.	ENERGIZATION VOLT	ENERGIZATION AMP	NOMINAL VOLT	NOMINAL AMP	COIL ACTION
N223430	2FB Std.	0.185	60	0.475	0.030	1.50	2.1	ORD.
N224396	2FB Std.	0.08	60	0.386	0.47	0.84	1.8	ORD.
N245804	2FB Std.	1000	D.C.	5.6	0.0056			ORD.
		0.25	*D.C.	0.084	0.333	0.275	1.1	
		0.25	60	.696	0.480	1.3	1.1	
N318991	2FB Std.	500	D.C.	3.76	0.0075			ORD.
		0.16	*D.C.	0.067	0.42	0.352	2.2	
		0.16	60	1.23	0.61	2.93	2.2	
N292908	2FB Std.	200	D C.	3.67	0.0183			S.D.A.
		0.16	*D.C.	0.067	0.42	0.288	1.8	
		0.16	60	1.23	0.61	1.35	1.8	

* (+) Battery must be connected to (+) relay terminal.

NOTE: For Detail Parts and additional Information, refer to Service Manual: SM-2666F.

MISCELLANEOUS CONTROL RELAYS
(Power Off)

DN-11P

The DN-11P and DN-22P Relays are power transfer relays which are energized from the primary power source. When this source fails, the contacts switch the equipment from the primary source to a standby power source. The relay coil is equipped with a rectifier for operation from either ac or dc.

The armature of these relays is equipped with hold-down springs to ensure high back contact pressure. Contacts on these relays are heavy duty as listed in the tabulations.

CONTACTS

Heavy duty voltage contacts are available and designated H.D. in the tabulations. These contacts have a 15 ampere capacity and are silver to silver-impregnated carbon for both front and back.

MOUNTINGS AND CONNECTIONS

These relays are shock mounted for shelf or wall mounting. Connections to the relays can be made directly or through plug couplers that permit quick connections to the terminals for removal and replacement.

DN-22P

DN-11P RELAY

	4FB	6FB
Height	9-1/8″	9-1/8″
Width	6-1/4″	7-5/8″
Depth	7-5/16″	7-5/16″

DN-22P RELAY

HEIGHT	8-9/32″
WIDTH	4″
DEPTH	8″

UNION SWITCH & SIGNAL

ORDERING INFORMATION

The tabulations that follow contain part numbers and specifications for ordering relays. To order, consult the tabulations. Determine the coil resistance and contacts required and then order by part number specified. To aid in identification, specify the contacts and coil resistance selected along with the part number when ordering.

Order should specify if wall mounting brackets and or plug couplers are required.

Energization voltage, as shown in the tabulations, is the value at which the relay assumes the full energized position.

4-CONTACT DN-11P VITAL SHELF DC POWER TRANSFER RELAY

PART NO.	CONTACTS	COIL RESIS. OHMS	AC VOLTS	MIN. D.A. VOLTAGE	ENERGIZATION VOLTAGE (AC)
N220131	4FB H.D.	75/75	10	7.0	9.0
N214021	4FB H.D.	125/125	NOTE A	8.4	10.0

NOTE A: Relay only 12 Vac
Relay with 14 Vac - use 70 ohm, 22W resistor, Part No. N294451
Relay with 16 Vac - use 130 ohm, 22W resistor, Part No. N212507

CONTACTS: S.I.C. fronts and backs

NOTE: For Detail Parts and additional Information, refer to Service Manual: SM-2444H and SM-2444Z-3.

2-CONTACT DN-22P VITAL SHELF DC POWER TRANSFER RELAY

PART NO	CONTACTS	COIL RESIS. OHMS	AC VOLTS	MIN. D.A. VOLTAGE	ENERGIZATION VOLTAGE (AC)
N223526	2FB H.D.	75/75	10	7.0	9.0
N224029	2FB H.D.	125/125	12	8.4	10.8

CONTACTS: S.I.C. fronts and backs

NOTE: For Detail Parts and additional Information, refer to Service Manual: SM-2666D.

CONTROL RELAY
(Approach Lighting)

DNL-4

The DNL-4 is a Neutral DC Line Relay for use in approach lighting circuits. It is also available for approach lighting track circuits.

DNL-4 RELAY

HEIGHT	4-7/8″
WIDTH	4-1/2″
DEPTH	5″

DESCRIPTION

The DNL-4 Relay is available with either one or two low voltage contacts.

Contacts are either standard or silver to silver front and back. These contacts have a 4 ampere capacity at 30 volts dc or 175 volts ac.

The DNL-4 Relay is shock mounted for shelf or wall mounting.

ORDERING INFORMATION

The tabulations that follow contain part numbers and specifications for ordering relays. To order, consult the tabulations. Determine the coil resistance and contacts required and then order by part number specified. To aid in identification, specify the contacts and coil resistance selected along with the part number when ordering.

Order should specify if wall mounting brackets and or plug couplers are required.

Energization amperes and voltage, as shown in the tabulations, are the values at which the relay assumes the full energized position.

DNL-4 SHELF NEUTRAL DC LINE RELAY
(APPROACH LIGHTING)

PART NO.	CONTACTS	COIL RESIS. OHMS	ENERGIZATION	
			AMP	VOLTS
N231022	2FB S-S	78	0.0112	0.874

NOTE: For Detail Parts and additional Information, refer to Service Manual: SM-2723.

DNL-4 SHELF NEUTRAL DC TRACK RELAY
(APPROACH LIGHTING)

PART NO.	CONTACTS	COIL RESIS. OHMS	MIN. D.A.		ENERGIZATION	
			AMP	VOLTS	AMP	VOLTS
N185106	2FB Std.	0.14	0.190	0.026	0.410	0.057
N185161	2FB Std.	0.14	0.190	0.026	0.410	0.057

NOTE: For Detail Parts and additional Information, refer to Service Manual: SM-2723.

RELAYS, GENERAL PURPOSE

RSE-6

KP RELAYS

The KP Relay is a general purpose, plug-in polar relay. This relay, rugged in design and virtually maintenance free, is housed in a molded bakelite case with all operating parts fully enclosed and sealed. The coil and contact arrangements available provide for a multitude of circuit applications.

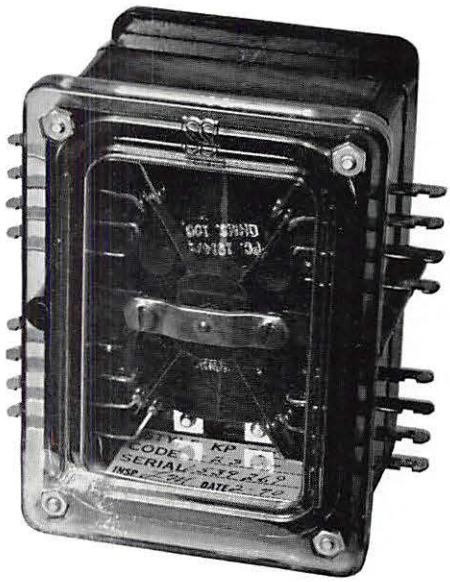

DESCRIPTION

The KP Relay is available either as a polar biased or a magnetic stick relay, as listed in the tabulations. The KP Relay is a direct current, ruggedly designed, two-position polar relay. This relay is housed in a molded bakelite case with all operating parts fully enclosed and sealed. The contacts are permanently molded in bakelite and are visible through the front cover. The relay is designed for maximum permanence of adjustment with minimum maintenance.

The KP Relay has two coils which may be used independently or in combination to suit requirements.

The KP Relay is plug-connected for quick and easy replacement. Relays are keyed to plug connectors to prevent plugging the relay into an incorrect position.

The armature of the magnetic stick relay is operated to the alternate positions (clockwise or counterclockwise) by opposite polarities and remains in the last position when the coils are deenergized. The armature of the polar-biased relay is operated clockwise (closing the front contacts) by normal polarity, and returns to the counterclockwise or biased position (opening the front contacts) when deenergized. Since the armature remains in the counterclockwise position when reverse polarity is applied, the unit functions as a sensitive biased relay.

Basic magnetic adjustments, in combination with various contact assemblies, govern the power requirements of the individual relays. The operating levels range from 150 to 5 milliwatts.

Energization, as used in the tabulations, refers to the maximum current required to ensure full front contact pressure in the polar biased relays. In magnetic stick relays, current is required to change relay position.

Bar supports for shelf mounting or rack mounting KP relays are available from US&S. Relays are wired from the rear on solder terminals. Relays are plugged into connectors on the rack and can easily be removed for replacement or maintenance. See Bar Support Ordering Information.

FEATURES

- Contacts are permanently molded in bakelite and are visible through the front cover.
- Plug-connected for quick and easy replacement.
- Designed for maximum permanence of adjustment with minimum maintenance.

For detail parts and additional information, refer to the following Service Manuals: SM-4501, SM-3623, SM-3623-A1, SM-3623-A2, and SM-5455.

ORDERING INFORMATION

The individual relay listings show the various magnetic stick and polar biased relays offered.

Select the coil resistance and order by part number given.

When ordering the relay for replacement, give the code number and part number. The code number is formed by the numbers remaining after the code slots have been cut.

POLAR BIASED KP RELAYS

Part Number	Contacts	Relay Coils		P.U. (Milliamps.)		Energization (Milliamps.)	Full D.A. (Milliamps.) Min.
		Location	Resistance (Ohms)	Max.	Min.		
N225785	2F, 2B	Upper	12.5	50	30	55	15
		Lower	12.5	50	30	55	15
N215618	2F 2B	Upper	105	17	9	20	5
		Lower	105	17	9	20	5
N296500	2F, 2B	Upper	105	17	9	20	5
		Lower	1070	5.3	3.7	6.5	1.7
N191481	2F, 2B	Upper	1070	5.3	3.7	6.5	1.7
		Lower	1070	5.3	3.7	6.5	1.7
N240096	2F, 2B	Upper	3800	3	2	3.7	1
		Lower	3800	3	2	3.7	1
N294846	2F, 2B	Upper	20				
		Lower	3800				

4 INDEPENDENT CONTACTS (Contact Opening Approximately 0.030 inch)
(2 Normally Open; 2 Normally Closed)

MAGNETIC STICK KP RELAYS

Part Number	Contacts	Relay Coils		Energization (Milliamps.)	
		Location	Resistance (Ohms)	Max.	Min.
N347480	4NR	Upper	20	80	68
		Lower	20	80	68
N371940	4NR	Upper	12.5	105	89
		Lower	12.5	105	89

DEPENDENT CONTACTS (Contact Opening Approximately 0.026 inch)

Part Number	Contacts	Relay Coils		Energization (Milliamps.)	
		Location	Resistance (Ohms)	Max.	Min.
N191493	4NR	Upper	105	45	25
		Lower	20	90	55
N217122	4NR	Upper	105	45	25
		Lower	105	45	25
N191500	4NR	Upper	1070	14	9
		Lower	1070	14	9

DEPENDENT CONTACTS (Contact Opening Approximately 0.050 inch)

Part Number	Contacts	Relay Coils		Energization (Milliamps.)	
		Location	Resistance (Ohms)	Max.	Min.
N191499	2N, 2R	Upper	20	30	20
		Lower	20	30	20
N231412	2N, 2R	Upper	75	SPECIAL	ADJUSTMENT
		Lower	33		
N220821	2N, 2R	Upper	1070	5	3
		Lower	1070	5	3

4 INDEPENDENT CONTACTS (Contact Opening Approximately 0.040 inch)
(2 Normally Open; 2 Normally Closed)

BAR SUPPORTS FOR SHELF MOUNTING KP RELAYS

ORDERING INFORMATION

Bar supports are available for mounting up to seven KP Relays on a shelf. This support is arranged for all circuits to be wired directly to the relay plug connector solder terminals. The KP Relay is inserted into the plug connectors and secured with two hinged lock plates.

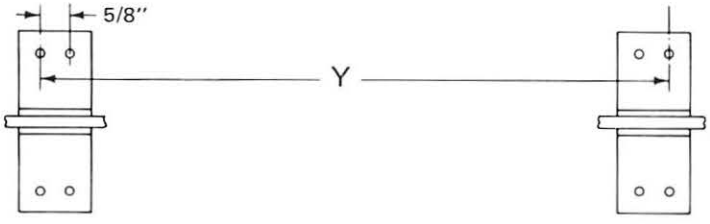

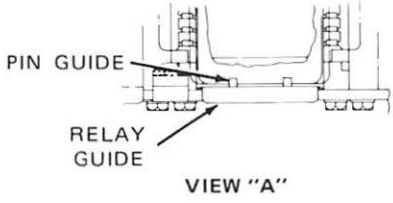

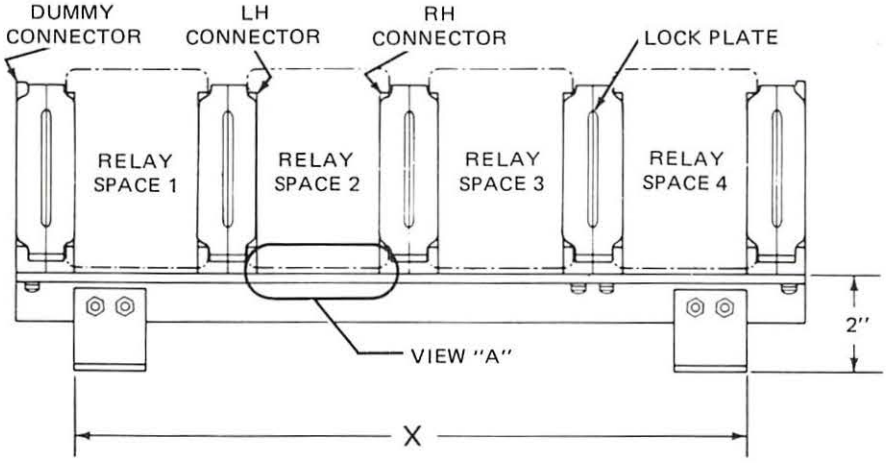

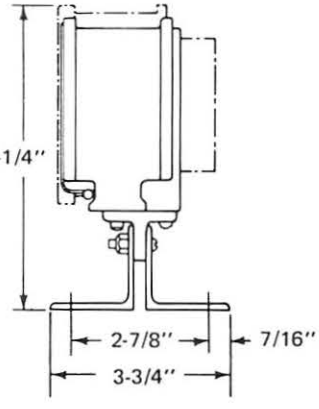

NO. OF RELAYS	DIM X	DIM Y
2	6-5/16"	5-7/16"
4	13-13/16"	12-15/16"
7	25-1/16"	24-3/16"

Order by Part Number & Description Shown in Caps

PART NO.	DESCRIPTION
N432843	RELAY MOUNTING BAR SUPPORT* arranged for shelf mounting 2 relays.
N395326	RELAY MOUNTING BAR SUPPORT* arranged for shelf mounting 4 relays.
N392567	RELAY MOUNTING BAR SUPPORT* arranged for shelf mounting 7 relays.
	*Includes required quantity of connectors, relay guides, pin guides, lock plates and hardware for assembly.

BAR SUPPORTS FOR RACK MOUNTING KP RELAYS

ORDERING INFORMATION

Bar supports are available for mounting up to seven KP Relays on a rack. This support is arranged for all circuits to be wired directly to the relay plug connector solder terminals. The KP Relay is inserted into the plug connectors and secured with two hinged lock plates.

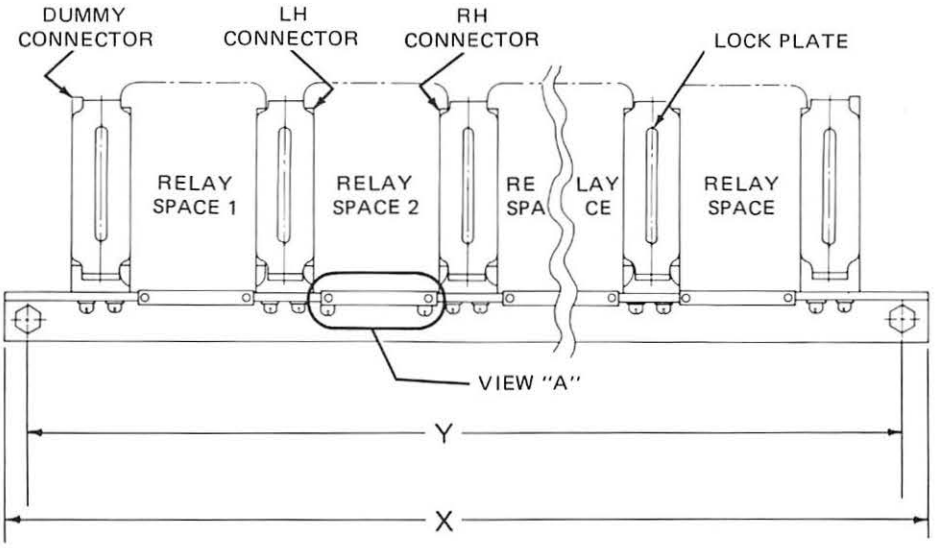

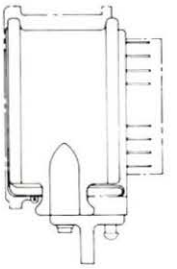

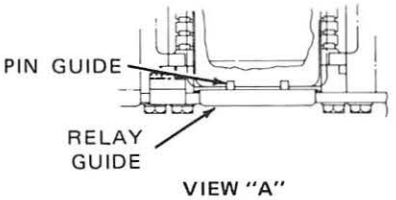

NO. OF RELAYS	DIM X	DIM Y
4	19-1/4"	18-1/4"
7	30-1/4"	29-1/4"

UNIVERSAL EQUIPMENT RACKS ARE SHOWN IN RSE-9A1.

Order by Part Number & Description Shown in Caps

PART NO.	DESCRIPTION
N451536-0101	RELAY RACK BAR SUPPORT* arranged for rack mounting 4 relays on 20" Universal Equipment Racks.
N451404-0401	RELAY RACK BAR SUPPORT* arranged for rack mounting 7 relays on 31" Universal Racks.
	*Includes required quantity of connectors, relay guides, pin guides, lock plates and hardware for assembly.

UNION SWITCH & SIGNAL DIVISION
AMERICAN STANDARD INC. / SWISSVALE, PA 15218

LP-100 RELAYS

The LP-100 Relay is a plug-in relay for general purpose application. This relay possesses long life and trouble free features, which include optimum length and thickness of the contact springs, contact slide, contact compression, and contact bifurcation.

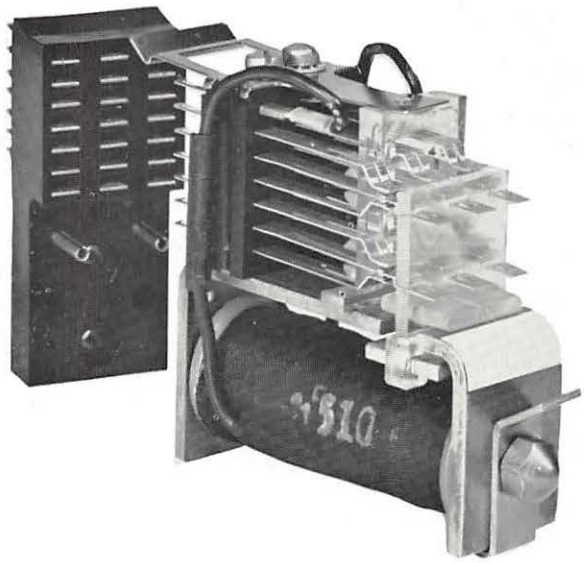

DESCRIPTION

The LP-100 Relay is a general purpose plug-in relay which lends itself to termi-point connections. It is offered in 6 and 8 open or bridging silver-to-silver transfer contacts.

Mounting base removable receptacle springs are available for termi-point, and soldered or push-on terminal connections. This relay can be used without a mounting base utilizing soldered or push-on terminal connections.

Hardware is available to mount the LP-100 Relay, with or without a base, on a 1/2" square bar. Screws alone can be used to mount the relay on a 1-5/8" drilled strip. It is recommended that LP-100 Relays be installed in a dust-proof enclosure.

Relay coil resistances are standardized for operations at 12, 16, 18, 24, and 28 volts. The contact springs, molded into blocks, have (either 6 or 8 transfer contacts and 2 coil terminals.

FEATURES

- Front and back contact springs are positioned with initial pressure against stops on the molded fixed ladder.
- Mounting base removable receptacle springs are available for termi-point, and push-on or soldered connections.
- The relay can be used without a mounting base with soldered or push-on terminal connections.
- Relays are standardized with 6 or 8 open transfer contacts and with 6 or 8 bridging transfer contacts.

For detail parts and additional information, refer to Service Manual SM-4595.

ORDERING INFORMATION

Order LP-100 Relays by part number from the relay tabulation. When required, mounting base and mounting hardware are ordered separately. Orders for bases should specify the base part number and the relay for which it is used.

LP-100 MOUNTING BASE

PART NUMBER	CONNECTION TYPE	NUMBER OF RELAY CONTACTS
N451413-0101	Termi-point	6
N451413-0102	Push-on or Solder	6
N451413-0103	Termi-point	8
N451413-0104	Push-on or Solder	8

LP-100 MOUNTING HARDWARE

PART NUMBER	DESCRIPTION	QUANTITY PER RELAY OR BASE
M344657	Clamp; for 1/2" bar	1
J052299	Screw; 10-32 X 7/8"	2
J048172	Nut; 10-32 **	2

** Nuts are only required if the base threads should become stripped or extra security against environment vibration is desired.

LP-100 GENERAL PURPOSE RELAY

PART NUMBER	CONTACTS	COIL RESISTANCE (OHMS)	SYSTEM VOLTAGE
SILVER-TO-SILVER BRIDGING (OVERLAP) TRANSFER CONTACTS			
N451085-0108	6BT	72	12
N451085-0109	6BT	112	16
N451085-0111	6BT	280	24
N451085-0307	8BT	46	12
N451085-0308	8BT	72	16
N451085-0309	8BT	112	18
N451085-0310	8BT	175	24
N451085-0311	8BT	280	28
SILVER-TO-SILVER OPEN TRANSFER CONTACTS			
N451085-0208	6FB	72	12
N451085-0209	6FB	112	16
N451085-0211	6FB	280	24
N451085-0217	6FB	175	18
N451085-0407	8FB	46	12
N451085-0408	8FB	72	16
N451085-0409	8FB	112	18
N451085-0410	8FB	175	24
N451085-0411	8FB	280	28

L SERIES RELAYS

The style L Relay is for general purpose and coding applications. This relay possesses long life and trouble free features with sufficient contact slide, contact compression, and have bifurcated contacts.

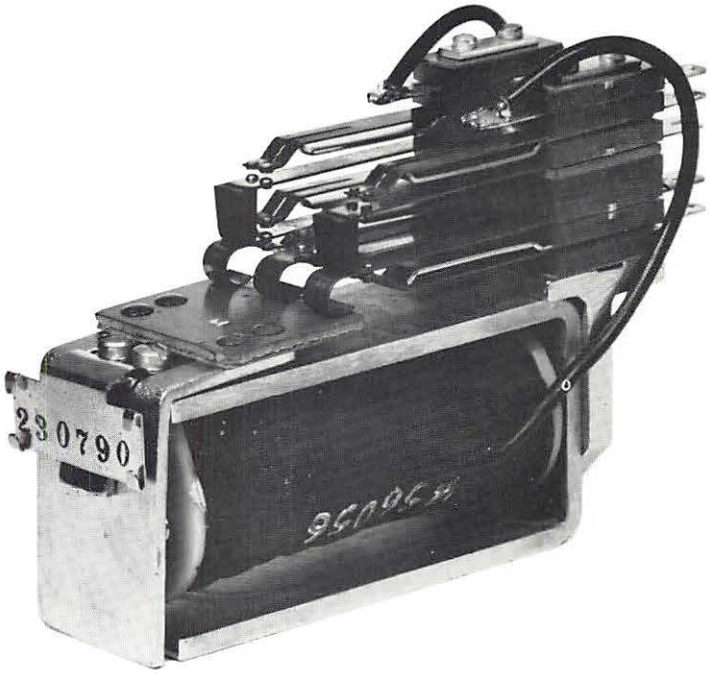

DESCRIPTION

The Style L is a compact, sturdily constructed relay designed for heavier duty application than conventional relays. They may be used for dependable coded control of circuit switching. Style L Relays are not individually enclosed but are designed for mounting in compact groups in a common enclosure.

The Style L Relay is a general purpose relay which lends itself to termi-point connections. It is available in three or as many as six contact sections having silver to silver bifurcated contacts.

This relay is used without a mounting base utilizing soldered contacts.

Relay coil resistances range from 0.20 ohms to 425 ohms, and the operating voltages range from 3.5 volts to 22 volts.

Style L Relays have been tested and operate satisfactorily under ambient temperatures from -40° C to +70° C. They have given satisfactory service under all conditions of environment in this country as well as many foreign countries, including tropical and sub-tropical locations.

FEATURES

- Wall or shelf mounting.
- Two-position neutral relay.
- Electrical breakdown test at 3000V.
- Steel parts protected by electro-coating.
- Contact material - coin silver for standard: silver palladium for heavy duty.

NOTE: For Detail Parts and Additional Information, refer to Service Manual SM-3701.

PRINTED IN U.S.A.

UNION SWITCH & SIGNAL DIVISION
AMERICAN STANDARD INC. / SWISSVALE, PA 15218

RSE-6C1
3/81

ORDERING INFORMATION

Order by part number from the tabulations below. To aid in identification, specify the contacts and coil resistance along with the part number. Mounting bases are not required for the L Series Relays..

PART NUMBER	COIL RESISTANCE (OHMS)	PICK UP VOLTS	DROP AWAY VOLTS	CONTACTS
102585	425			2T
102586	72	4.5	1.0	2F
208010	31	5.0	1.0	4F-1B-2T
221016	175			2F-1B-3T
228764	48	5.0	0.2	4F-2B-1T
228765	48	6.0	0.2	4F-3B-1T
228766	48	3.5	0.2	2F-1B-2T
228768	280	6.0	0.4	1F-2B
228789	72	8.0	1.5	3F-1B-3T
228794	31	5.0	1.0	4F-2B-2T
228796	31	5.5	1.0	2F-2B-2T
228797	31	5.0	1.0	2F-1B-2T
230790	48	5.5	0.8	5F-1B-2T
240007	31	5.5	1.0	2F-1T
243370	175			3F
244443	72	5.0	1.0	1F-2B-3T
244531	48	4.5	0.2	1F-4T
256079	46	5.8	0.6	9F-2B-1T
262589	48	9.0	1.5	5F-2B-1T
308807	35/35	10.0 'B'	0.8 'B'	
		12.5 'A'	3.7 'A'	
308808	33	4.0	0.2	1F-3T
308809	46	6.5	1.0	4F-4T
309715	200/35	10.0	1.0	2F-2B-3T
309720	20	6.0	1.0	9F-3T
320848	85/85	9.0	0.9	2F
330966	380/380	22.0	1.5	
334980	175	8.5	0.5	2F-1B-1FB-1NB
386997	380/380	22.0	1.5	
437552	350	16.5	1.0	

OTHER RELAYS ARE AVAILABLE FOR SPECIAL APPLICATIONS
Consult your nearest US&S representative for information.

POWER SUPPLIES

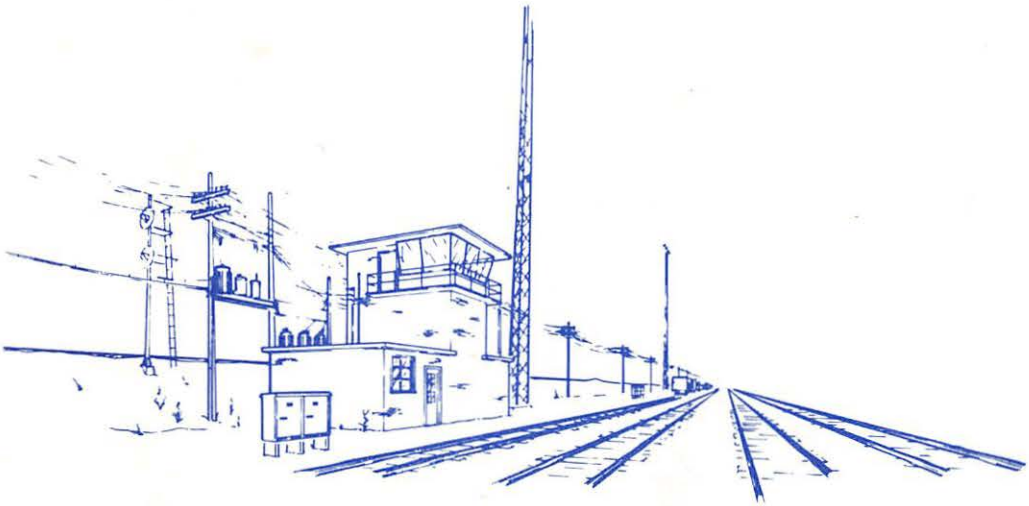

RSE-7

POWER SUPPLIES

RECTIFIERS

Cross Reference Substitution Charts RSE-7A0
Constant Current Rectifiers RSE-7A1
Constant Potential Rectifiers RSE-7A2

CONVERTERS

F-40M DC/DC Converter RSE-7B1

INVERTERS

F-81 DC to AC Inverters RSE-7C1
F-82 DC to AC Inverters RSE-7C2

TRANSFORMERS

Transformer Cross Reference Substitution Chart RSE-7D0
W-400 Air Colled Transformers RSE-7D1
W-800 Air Cooled Transformers RSE-7D2

RECTIFIER CROSS REFERENCE SUBSTITUTION CHARTS

The cross-reference substitution charts that follow will aid in ordering replacement rectifiers when the old model designation and part number is known.

The charts are separated into two functional groups: 1) Constant Current Rectifiers and 2) Constant Potential Rectifiers. The information provided in these charts is arranged in two columns. The first column lists the type and part number of the old models. The second column lists the corresponding part number for the new models. The lists are arranged alpha-numerically by the old model type designation.

CONSTANT CURRENT RECTIFIERS
(SEE RSE-7A1)

OLD MODELS		NEW MODELS
Type	Part No.	Part No.
RT5	213766	N451372-0101
RT5	213767	N451372-0101
RT10	219633	N451372-0101
RT10	219634	N451372-0101
RT10	221010	N451372-0101
RT10	221011	N451372-0101
RT10	224550	N451372-0101
RT11	209656	N451372-0107
RT11	213288	N451372-0107
RT11	219694	N451372-0101
RT11	219695	N451372-0101
RT11	342232	N451372-0107
RT21	192631	N451372-0107
RT21	192634	N451372-0107
RT21	212967	N451372-0107
RT21	222105	N451372-0101
RT21	222106	N451372-0101
RT21	395116	N451372-0101

OLD MODELS		NEW MODELS
Type	Part No.	Part No.
RT42	119366	N451372-0107
RT42	196563	N451372-0101
RT42	207224	N451372-0107
RT42	207275	N451372-0107
RT42	207918	N451372-0107
RT42	208287	N451372-0107
RT42	219581	N451372-0107
RT42	225355	N451372-0101
RT42	230204	N451372-0101
RT42	235543	N451372-0107
RT81	188955	N451372-0107
RT81	190852	N451372-0107
RT81	194650	N451372-0101
RT81	227282	N451372-0101
RT81S	341040	N451372-0112
R3T-104	107979	N451372-0104
R3T-104	107982	N451372-0104
R3T-104	108918	N451372-0104
R3T-104	291952	N451372-0104
R3T-104	292290	N451372-0104
R3T-204	216648	N451372-0104
R3T-204	217044	N451372-0104

CONSTANT POTENTIAL RECTIFIERS
(SEE RSE-7A2)

OLD MODELS		NEW MODELS
Type	Part No.	Part No.
HQ108D	337707	N451372–0503
HQ108P	273098	N451372–0502
HQ7C	334090	N451372–0307
HQ7C	388513	–0310
RPQ21	162875	N451372–0504
RPQ21	185711	–0505
RPQ42	221103	N451372–0504
RPQ42	231960	–0504
RPQ42	306987	–0504
RPQ44	316387	N451372–0505
RPQ61	210802	N451372–0505
RQ5	160849	N451372–0303
RQ5	181324	–0302
RQ5	189784	–0301
RQ5	196068	–0304
RQ7	285970	N451372–0305
RQ8	212635	N451372–0306
RQ10	164362	N451372–0302
RQ12	147452	N451372–0502
RQ12	210643	–0502
RQ12	210938	–0502
RQ12	286233	–0502
RQ21	163618	N451372–0501
RQ21	210642	–0502
RQ21	211986	–0501
RQ21	286234	–0501
RQ21	322820	–0502

OLD MODELS		NEW MODELS
Type	Part No.	Part No.
RQ22	176066	N451372–0501
RQ22	186488	–0502
RQ22	255325	–0503
RQ22	260586	–0501
RQ22	327674	–0503
RQ22	333986	–0503
RQ30	195410	N451372–0503
RQ41	184642	N451372–0503
RQ41	196250	–0503
RQ41	199289	–0502
RQ41	286236	–0502
RQ53	196418	N451372–0503
RQ60	188693	N451372–0504
R3Q206	255949	N451372–0502
R3Q206	297499	–0502
R3Q206	306224	–0502
R3Q208	212991	N451372–0502
R3Q208	219974	–0502
R3Q406	255950	N451372–0504
R3Q406	306233	–0504
R3Q408	214586	N451372–0502
R3Q408	261161	–0504
R3Q409	242486	N451372–0504
R3Q416	225229	N451372–0504
SQ116P	273110	N451372–0502
SQ116P	273475	–0502
SQ216P	321358	N451372–0501

CONSTANT CURRENT RECTIFIERS
CCR SERIES

US&S constant current rectifiers are used for battery charging applications where a load is connected to the battery, or for floating the battery at a lower rate when the load is disconnected.

These rectifiers are reliable, inexpensive assemblies, designed for long life and trouble free operation. Modular construction provides economincal and versatile use whenever a rectifier of this kind is required.

The CCR rectifiers provide operating voltages from 3.0 to 20.0 volts dc.

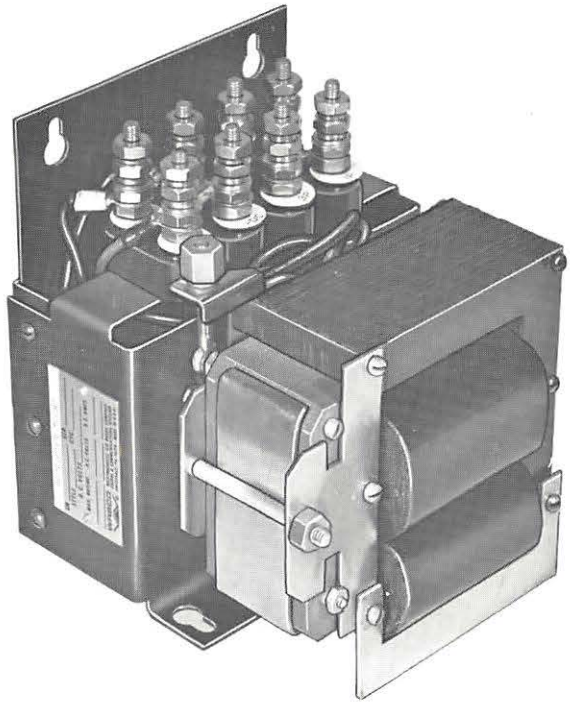

DESCRIPTION

The constant current rectifiers are self-contained, full wave rectifiers, each containing a reactive input transformer and a full-wave diode rectifier bridge. A sliding core is employed to obtain optimum transformer operation and to set desired current levels. The diode rectifier bridge is bracket-mounted and easily accessible for testing and replacement. A terminal board is mounted above the diode rectifier bridge. External connections are made through the terminal posts on top of the terminal board. The transformer is mounted on sleeve spacers perpendicular to the terminal board.

The versatility of this series of constant current rectifiers is in the selection of transformers. Each rectifier has a specifically rated transformer to obtain a given output. The diode rectifier bridge is standard in each rectifier. Refer to the tabulation under Ordering Information for complete inut/output voltage and current ratings.

MOUNTING

The constant current rectifiers are designed for shelf or wall mounting using standard mounting hardware. External connections are made at the terminal posts to enable easy removal and replacement of the rectifier.

FEATURES

- Rugged construction.
- Versatile application.
- Components easily accessible.
- Reliable - maintenance free.
- Long life - solid state components.
- Economical - high efficiency
- Silicon avalanche integrated bridge rectifier with built-in surge protection.
- Current adjustable from 0 to maximum rating.
- Operating temperature range from −40°C to +71°C (−40°F to +160°F).
- Full rated output with ±10% input variation.
- Two rate charge capability. Terminals available for high and low rate.
- Meets AAR requirements.

PRINTED IN U.S.A.

UNION SWITCH & SIGNAL DIVISION
AMERICAN STANDARD INC. / SWISSVALE, PA 15218

CONSTANT CURRENT RECTIFIERS
CCR SERIES

ORDERING INFORMATION

The tabulation that follows contains part numbers and specifications for ordering rectifiers. Determine the operating characteristics desired and order by part number, style number, and input/output requirements.

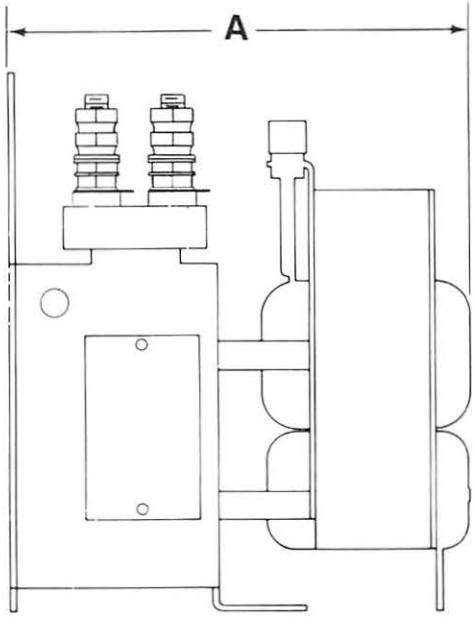

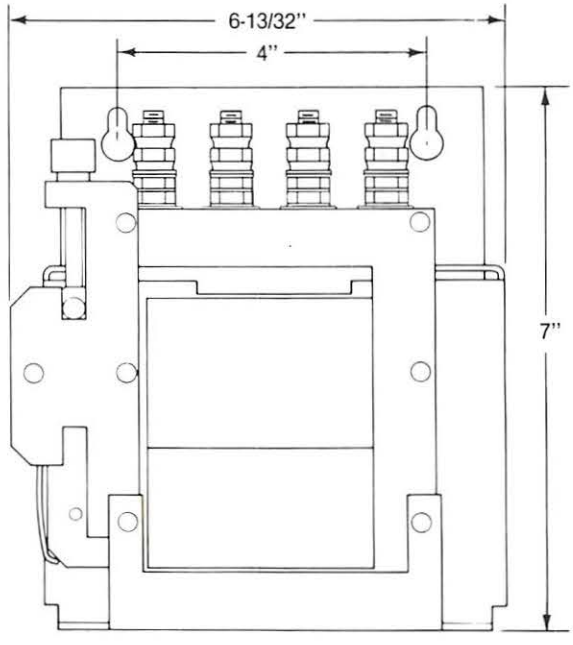

PART NO.	INPUT			OUTPUT		DIM.	APPLICABLE BATTERY NO. OF CELLS & TYPE	
	STYLE	(VAC)	(Hz)	(VDC)	(AMPS)	A		
N451372-0101	CCR-4	120/240	50/60	13.5	4.4	6"	4-6, LA	6-9, NI
N451372-0104	CCR-5	120/240	50/60	3.0	5.0	5-½"	1, LA	1-2, NI
N451372-0107	CCR-5	120/240	50/60	20.0	5.0	6-½"	7-9, LA	10-13, NI
N451372-0112	CCR-6	120	60/100	13.5	6.0	6-½"	4-6, LA	6-9, NI

LA = Lead Acid
NI = Nickel Iron

CONSTANT POTENTIAL RECTIFIERS
CPR SERIES

US&S constant potential rectifiers are used for track and line applications. These rectifiers are reliable, inexpensive assemblies designed for long life and trouble free operation and provide a wide range of operating voltages to satisfy most signal and communication requirements.

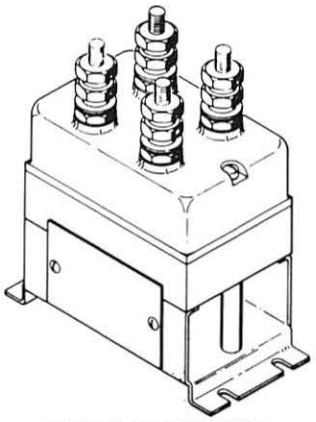

CPR-1 RECTIFIER

DESCRIPTION

CPR rectifiers are intended for use with dc equipment, such as relays or other equipment requiring a constant voltage source. They are not intended for battery charging applications.

The CPR's are self-contained, full bridge rectifiers consisting of an input transformer and a silicon avalanche integrated rectifier bridge. The rectifiers are designed for shelf or wall mounting using standard mounting hardware. External connections are made at the terminal posts to enable easy removal and replacement of rectifiers.

Series CPR-1 Rectifiers are designed for low power applications up to 7 watts load; Series CPR-2, -3, -4, and -6 Rectifiers for loads up to 120 watts; Series CPR-10 Rectifiers for loads up to 247 watts.

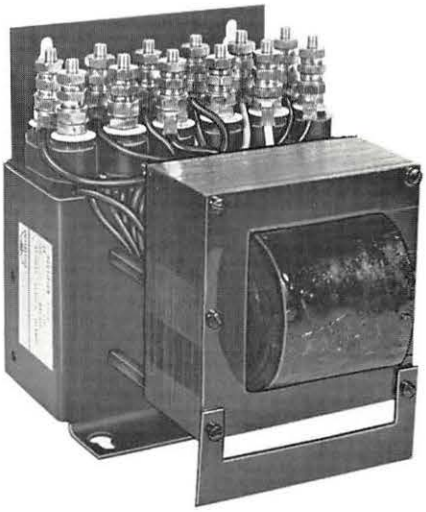

CPR-2, -3, -4, and CPR-6 RECTIFIERS

FEATURES

- Rugged construction.
- Versatile applications.
- Components easily accessible.
- Reliable - maintenance free.
- Economical - high efficiency operation.
- Long life - solid state components.
- Output voltage adjustable (certain series)
- Operating temperature range from −40°C to +70°C (−40°F to +160°F).
- Silicon avalanche integrated bridge rectifier with built-in surge protection.
- 3000 vac isolation between input to output chassis.
- Meets AAR requirements.

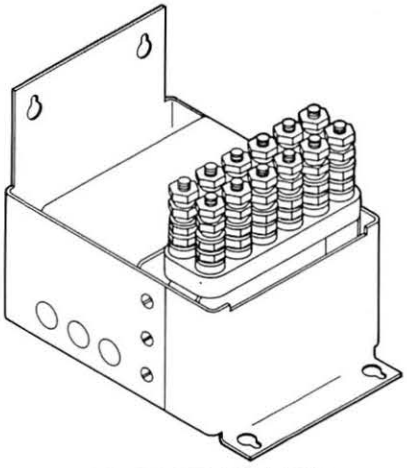

CPR-10 RECTIFIER

RSE-7A2
REV. 2/83

UNION SWITCH & SIGNAL DIVISION
AMERICAN STANDARD INC. / SWISSVALE, PA 15218

PRINTED IN U.S.A.

CPR-1 RECTIFIER

The CPR-1 Rectifier is enclosed in a metal housing, which is fastened with two bolts to the main chassis of the rectifier. The diode rectifier bridge is mounted at the bottom center of the chassis, with the transformer directly above it. The metal housing eliminates dirt or any foreign matter inside the chassis. External connections to these components are made through the terminal posts on top of the housing.

CPR-2, CPR-3. CPR-4, and CPR-6 RECTIFIERS

These constant potential rectifiers are of modular construction. The diode rectifier bridge is bracket-mounted and is easily accessible for testing and replacement. Output voltage is adjustable over a wide range of voltage settings by top adjustment of transformer windings.

A terminal block is mounted above the diode rectifier bridge. External connections to the rectifier are made through terminal posts on top of the terminal block. The transformer is mounted on sleeve spacers perpendicular to the terminal board.

The versatility of this series of rectifiers is in the selection of transformers to obtain the desired operating characteristics. Each rectifier has a transformer with a specific rating to obtain given output. The diode rectifier bridge is standard in each rectifier. Refer to the tabulation under Ordering Information for operating characteristics.

CPR-10 RECTIFIER

The input transformer and rectifier assembly are mounted to a wrap around frame, which also serves as a mounting bracket for wall mounting applications. A separate bracket, for shelf mounting, is bolted to the front of the unit.

All circuit wiring is brought out to terminals mounted at the top of the assembly. All circuit changes for providing different voltage outputs are made at these terminals. This also includes the circuit connections to accommodate the two different input voltages.

ORDERING

Order by part number from the tabulations following, specifying rating required.

CONSTANT POTENTIAL RECTIFIERS
SERIES CPR-1

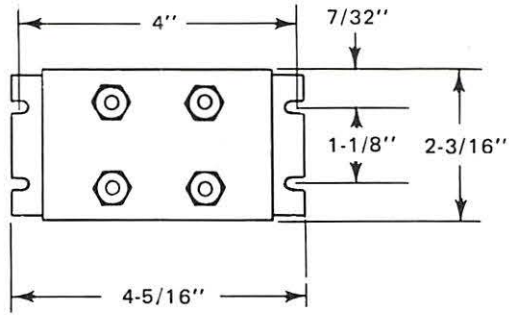

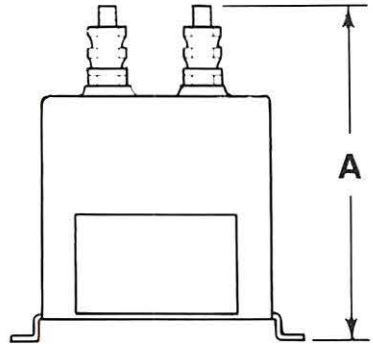

PART NO.	INPUT (VAC)	INPUT (Hz)	OUTPUT (VDC)	OUTPUT MAX. (AMPS)	DIM. A
N451372-0301	2.0	25/100	1.2	0.30	4-31/32"
N451372-0302	110.0	25/100	10.0	0.06	4-31/32"
N451372-0303	15.0	25/100	12.0	0.10	4-23/32"
N451372-0304	110.0	25/100	12.0	0.10	4-31/32"
N451372-0305	110.0	60/100	16.0	0.10	4-31/32"
N451372-0306	1.44	60	4.0	0.20	4-29/32"
N451372-0307	9.2	25/100	13.0	0.50	5-11/32"
N451372-0310	115.0	60/100	16.0	0.20	5-11/32"

CONSTANT POTENTIAL RECTIFIERS
SERIES CPR-2, CPR-3, CPR-4, and CPR-6

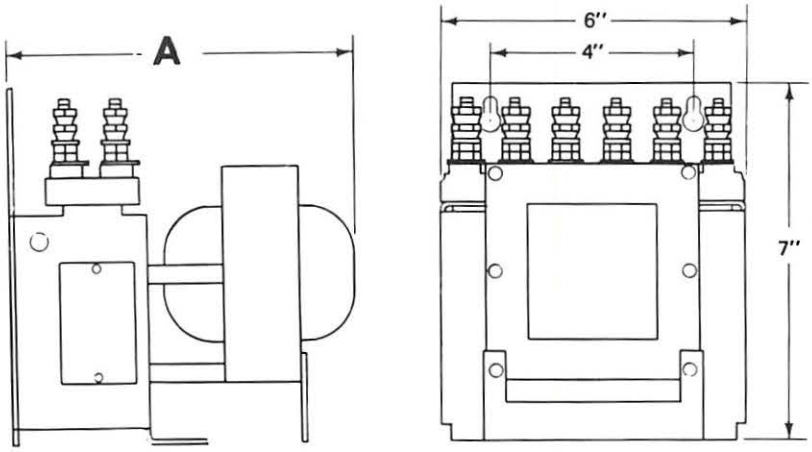

CONSTANT POTENTIAL RECTIFIERS
SERIES CPR-10

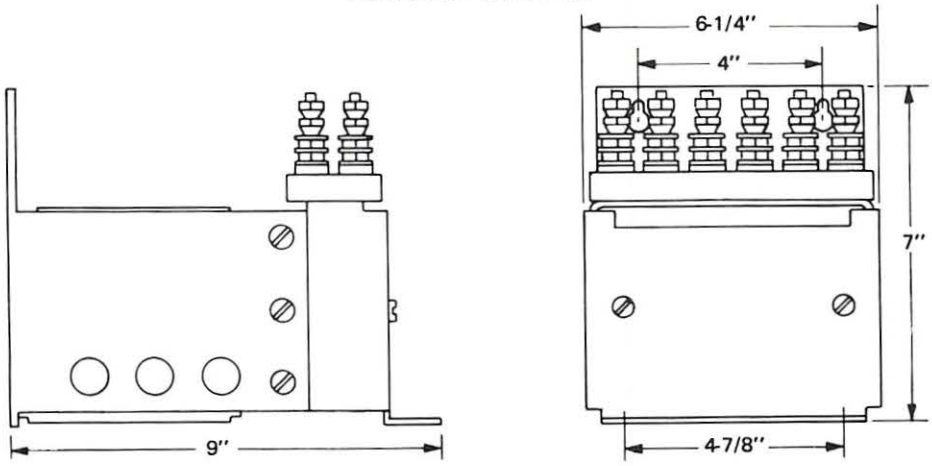

PART NO.	SERIES	INPUT (VAC)	INPUT (Hz)	OUTPUT (VDC)	OUTPUT MAX. (AMPS)	DIM. A	NOTES
N451372-0501	CPR-4	115/120	60/100	10.0-18.0	4.0	6-27/32"	Adj. 0.5V Steps
N451372-0502	CPR-3	110/115	25/100	10.0-17.5	3.0	7-11/32"	Adj. 0.5V Steps
N451372-0503	CPR-2	110/115	50/100	27.0-60.0	2.0	7-11/32"	Adj. 2.0V Steps
N451372-0504	CPR-6	115/120	50/100	12.5-20.0	6.5	7-11/32"	Adj. 0.6V Steps
N451372-0505	CPR-10	120/114	60/100	10.0-16.5	15.0		Adj. 0.5V Steps

NOTE: For complete detail parts list and additional information, refer to service manual SM5952.

WABCO

An American-Standard Company

F-40M DC/DC CONVERTER

WABCO's F-40M DC/DC Converter is a completely transistorized unit for general use as a control system power supply. The unit operates on input voltages from 18 to 50 volts dc and provides +5, -5, +12, and -12 volt dc outputs. The unit is designed to operate continuously in an ambient temperature of -30° to +140°F. Excursions to -40°F. will not damage the equipment.

UNION SWITCH & SIGNAL DIVISION
WESTINGHOUSE AIR BRAKE COMPANY
Swissvale, PA 15218

RSE-7B1
10/72

PRINTED IN U.S.A.

WABCO

DESCRIPTION

The converter is designed for standard rack mounting. Overall size is 19" x 8-3/4" x 10". Electrical connections are made to a terminal board mounted behind a standard junction box plate, located on the front side of the unit. The input and output cables use a common cable connector located on the rear of the unit. Input and output circuits are completely isolated from each other and ground.

The basic unit consists of an electronically controlled pre-regulator and an inverter with rectified and filtered outputs. All four outputs are fused and self protected against overload. Protection in the pre-regulator output prevents high voltage from being applied to the outputs. The converter input is designed to withstand a surge voltage of 1250 volts for 300 to 400 microseconds, line to line, and a 3000 VAC dielectric test between input and case and between input and output terminals, and 1000 volts between output terminals and case for a period of one (1) minute.

FEATURES

- Starts under full load.
- Overload protection.
- Stands severe temperatures.
- Completely transistorized.
- Complies with applicable AAR requirements.

CHARACTERISTICS

The characteristics of the converter are tabulated below:

Input Voltage: 18 to 50 volts dc

Output Voltage:

1. +5.45V ±5% at 01.5 to 3A resistive load referred to common, maximum load 4A, fused at 5 amps.
2. -5.5V ±5% at 0 to 1A resistive load referred to common, fused at 4 amps.
3. +12.7V ±5% at 0 to 0.5A resistive load referred to common, fused at 1 amp.
4. -12.7V ±5% at 0 to 0.5A resistive load referred to common.

Ripple:

1. at +5.45 VDC output, 120 mv. peak to peak max.
2. at -5.5 VDC output, 20 mv. peak to peak max.
3. at 12.7 VDC output, 120 mv. peak to peak max.
4. at 12.7 VDC output, 120 mv. peak to peak max.

Operating Temperature:

-30° to +140°F.

ORDERING INFORMATION

PART NO.	DESCRIPTION
N451033-2801	F-40M DC/DC CONVERTER

F-81 DC/AC INVERTER

The F-81 Inverter is a completely solid state unit designed to convert direct current into alternating current at high efficiency. The equipment, utilizing 100% solid state technology, eliminates the mechanical vibrators used on previous inverters, thus providing a unit of exception reliability and stability over a wide temperature range.

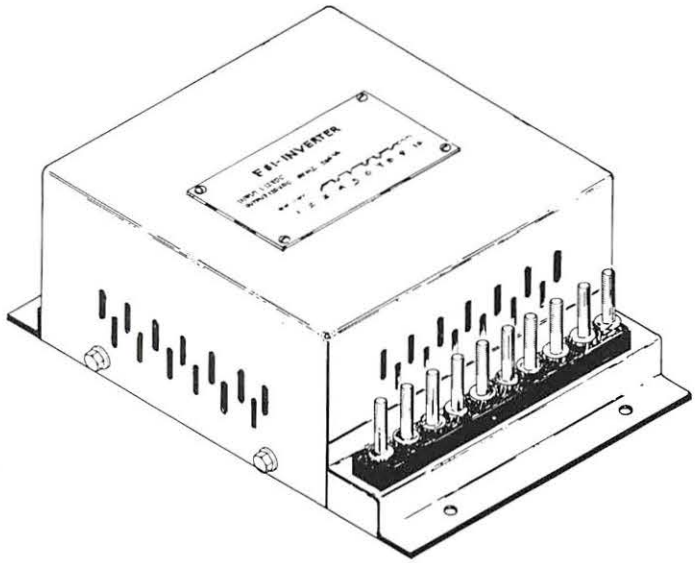

DESCRIPTION

The F-81 Inverter is designed for a direct electrical replacement of former inverters used to supply cab signals or standby ac power source. The Inverter is completely self-contained with built in short circuit protection.

The equipment is housed in a compact, space saving sheet steel enclosure. Electrical connections are made to terminals mounted on top of the unit, allowing for ease of maintenance and quick, simple installation of the unit.

OPERATION

Conversion from direct current to alternating current is accomplished by a solid state inverter oscillator circuit and a tapped output transformer. Exceptional reliability and stability result from the use of solid state circuitry in lieu of a mechanical vibrator for frequency control. The use of a tapped output transformer enables quick and easy adjustment of output voltages to system requirements.

MOUNTING

The F-81 Inverter is designed for either wall or shelf mounting using standard mounting hardware. Electrical connections are made to external AAR terminals mounted on the front panel of the equipment. Refer to Ordering Information for mounting dimensions.

FEATURES

- Proven solid-state design-ruggedly constructed.
- Surge protection built-in.
- Mechanical vibrator eliminated.
- Short circuit protection
- Compact space saving package.
- Ideal for standby ac power source.
- Meets AAR requirements.
- Stable output frequency — within ±1% from −40°C to +70°C during normal battery variation.

CROSS REFERENCE SUBSTITUTION CHART

The chart provides equivalent F-81 replacement ordering numbers for existing F-30 and F-80 Inverters.

F-81 INVERTER	REPLACES	
	F-30	F-80
N451033-4001	N382592	N451033-3403
N451033-4002	N390490	N451033-3404

F-81 INVERTER

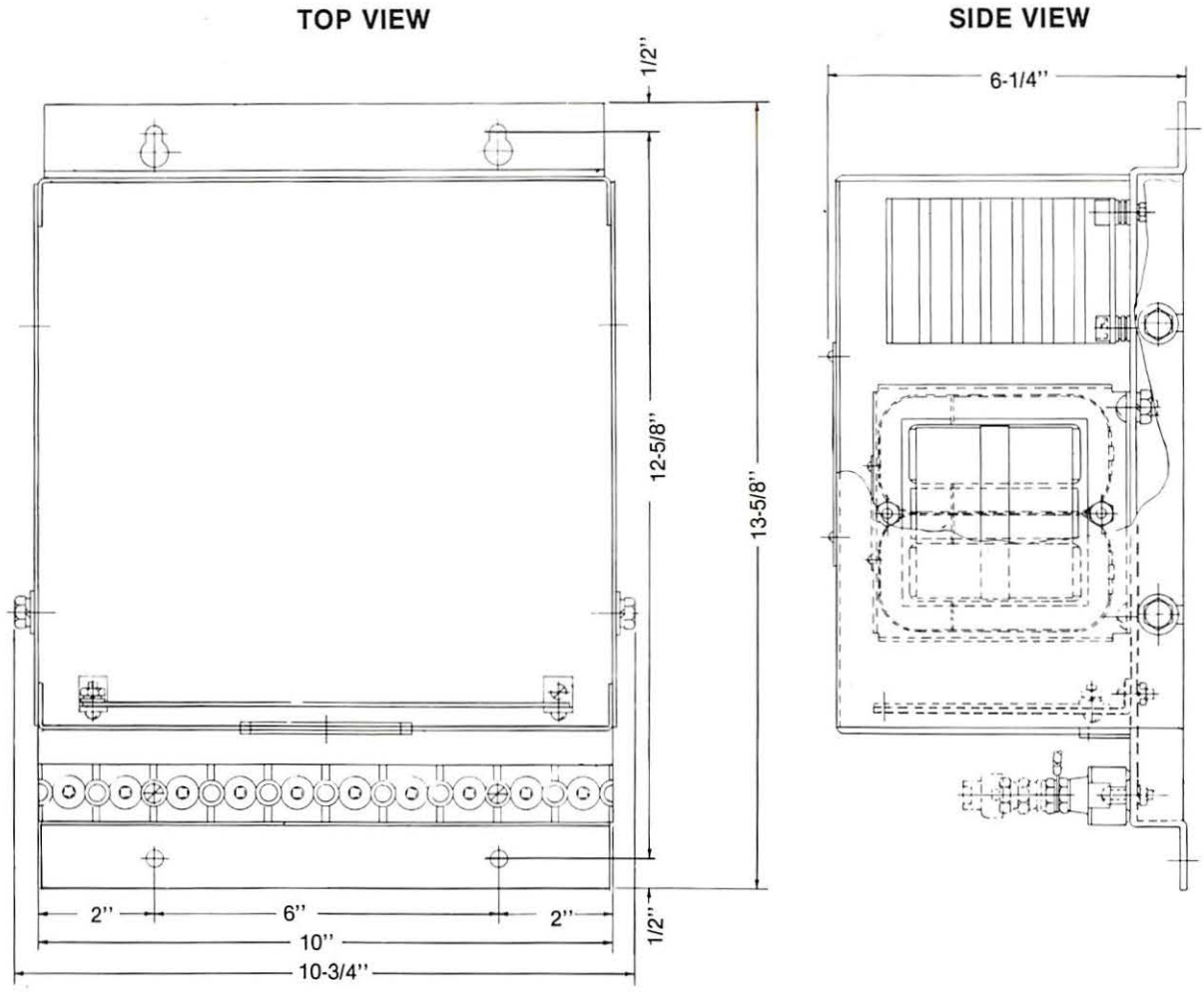

PART NUMBER	INPUT DC VOLTS	Hz	OUTPUT	
			VOLT AMPERES	VOLTS (AC)
N451033-4001	12	100	300	120 (15-15-15-15-50-5-5)
N451033-4002	12	60	300	120 (15-15-15-15-50-5-5)

NOTE: For detail parts and additional information, refer to service manual SM6128.

F-82 DC TO AC INVERTER

The US&S F-82 Inverter is a solid state power source specifically designed for use in Type "C" track circuit applications. A single F-82 unit can be used as the low voltage ac power source for up to four track circuits. The unit normally operates from 120 vac commercial power, but automatically transfers to standby batteries in the event of loss of ac power. Input power transfer is accomplished within the F-82 unit; so external transfer circuitry is not required. In the standby mode of operation, the F-82 converts dc to ac at a high efficiency to minimize battery drain.

The components are housed in a rugged sheet steel enclosure designed for either shelf or wall mounting using standard hardware. Electrical connections are made to external AAR terminals mounted on the front panel of the unit. Refer to back page for mounting dimensions.

CHARACTERISTICS

POWER INPUT
- Normal Operation:
  - Input voltage ..... 120 vac, 60 Hz (nom.)
  - Current ..... 1 amp max.
- Standby Operation:
  - Input voltage ..... 12 vdc (nom.)
  - Current ..... 10 amp. max.

POWER OUTPUT (track)
- Normal Operation:
  - Track output voltage ..... 5.5 vac
  - Sine waves, each secondary.
  - Current ..... 3.5 amp each secondary
- Standby Operation:
  - Track output voltage ..... 6.5 vac
  - Square waves, each secondary.
  - Current ..... 3.5 amp each secondary

Reverse battery protection ..... built-in
Operating temperature range .... $-40^{o}C$ to $+70^{o}C$

FEATURES

- Low maintenance.
- Automatic power transfer.
- Easy to install.
- Four (4) track output capability.
- Reverse battery protection built in.
- High efficiency operation.
- Reliable and stable in extreme temperature changes.
- Solid state design inverter circuitry.
- Wall or shelf mounted.
- AAR terminals for external connections.

APPLICATION

A typical highway crossing application utilizing three type "C" track circuits utilizing an F-82 Inverter is shown in the diagram below. The track rectifier located on the opposite end of the track circuit, provides a half wave rectified ac signal which will normally energize the dc relay. When a train occupies the track circuit, the rectifier is shunted and the dc relay is de-energized.

All four F-82 outputs could be used in a two track highway crossing system, if type "C" track circuits are utilized in the approaches.

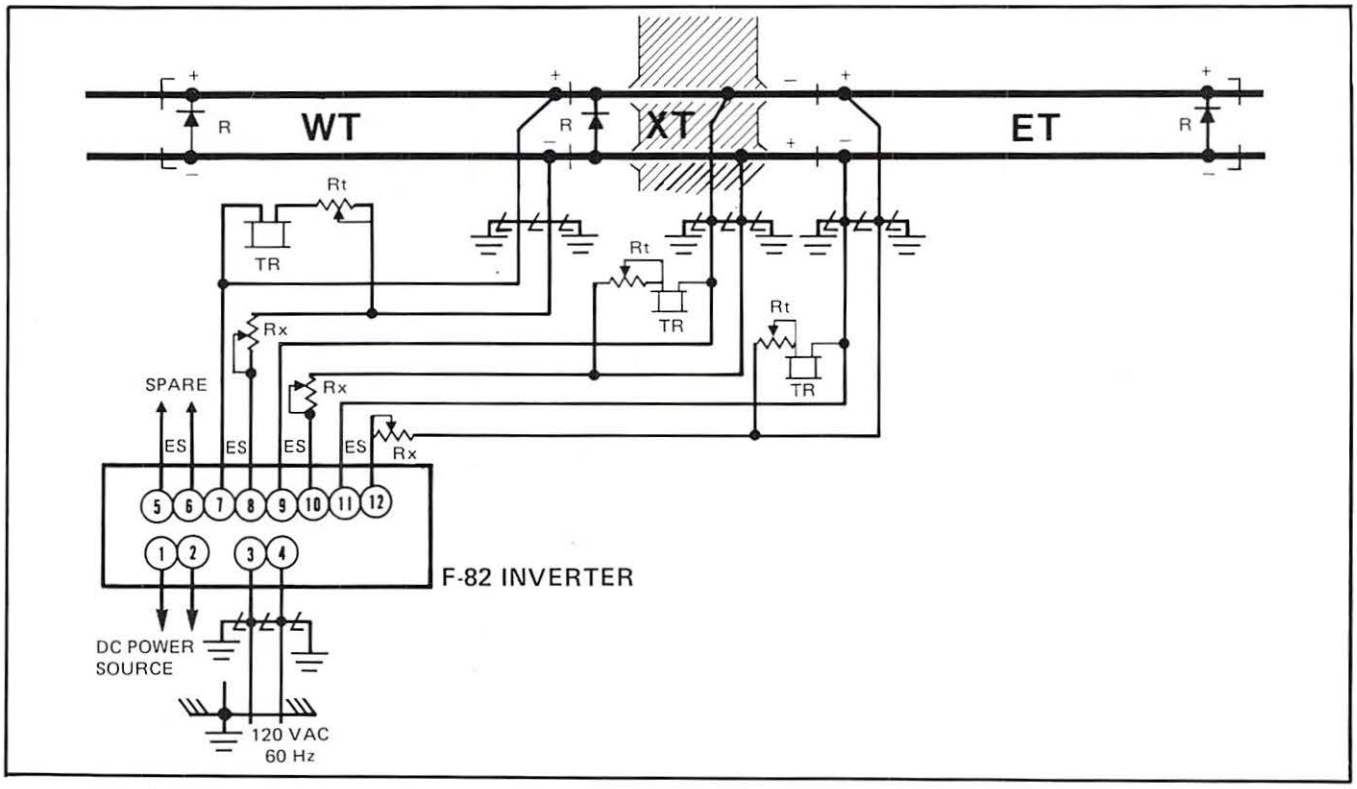

FOR APPLICATION, MAINTENANCE, AND DETAILED PARTS LIST REFER TO SM 6137

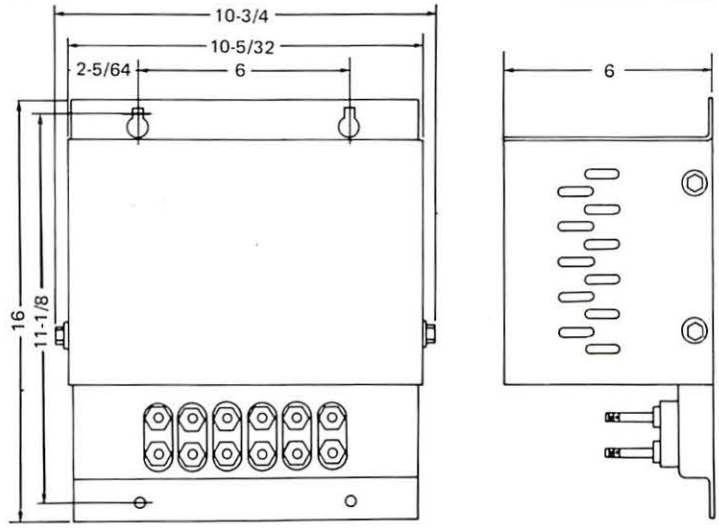

TOP VIEW SIDE VIEW

PART NUMBER	DESCRIPTION
N451033-4101	F-82 INVERTER, DC to AC

Weight: 23 lbs., approx.

F-82 DC TO AC INVERTER

The US&S F-82 Inverter is a solid state power source specifically designed for use in Type "C" track circuit applications. A single F-82 unit can be used as the low voltage ac power source for up to four track circuits. The unit normally operates from 120 vac commercial power, but automatically transfers to standby batteries in the event of loss of ac power. Input power transfer is accomplished within the F-82 unit; so external transfer circuitry is not required. In the standby mode of operation, the F-82 converts dc to ac at a high efficiency to minimize battery drain.

The components are housed in a rugged sheet steel enclosure designed for either shelf or wall mounting using standard hardware. Electrical connections are made to external AAR terminals mounted on the front panel of the unit. Refer to back page for mounting dimensions.

CHARACTERISTICS

POWER INPUT
- Normal Operation:
  - Input voltage ..... 120 vac, 60 Hz (nom.)
  - Current ..... 1 amp max.
- Standby Operation:
  - Input voltage ..... 12 vdc (nom.)
  - Current ..... 10 amp. max.

POWER OUTPUT (track)
- Normal Operation:
  - Track output voltage ..... 5.5 vac
  - Sine waves, each secondary.
  - Current ..... 3.5 amp each secondary
- Standby Operation:
  - Track output voltage ..... 6.5 vac
  - Square waves, each secondary.
  - Current ..... 3.5 amp each secondary

Reverse battery protection ..... built-in
Operating temperature range .... $-40^{o}C$ to $+70^{o}C$

FEATURES

- Low maintenance.
- Automatic power transfer.
- Easy to install.
- Four (4) track output capability.
- Reverse battery protection built in.
- High efficiency operation.
- Reliable and stable in extreme temperature changes.
- Solid state design inverter circuitry.
- Wall or shelf mounted.
- AAR terminals for external connections.

APPLICATION

A typical highway crossing application utilizing three type "C" track circuits utilizing an F-82 Inverter is shown in the diagram below. The track rectifier located on the opposite end of the track circuit, provides a half wave rectified ac signal which will normally energize the dc relay. When a train occupies the track circuit, the rectifier is shunted and the dc relay is de-energized.

All four F-82 outputs could be used in a two track highway crossing system, if type "C" track circuits are utilized in the approaches.

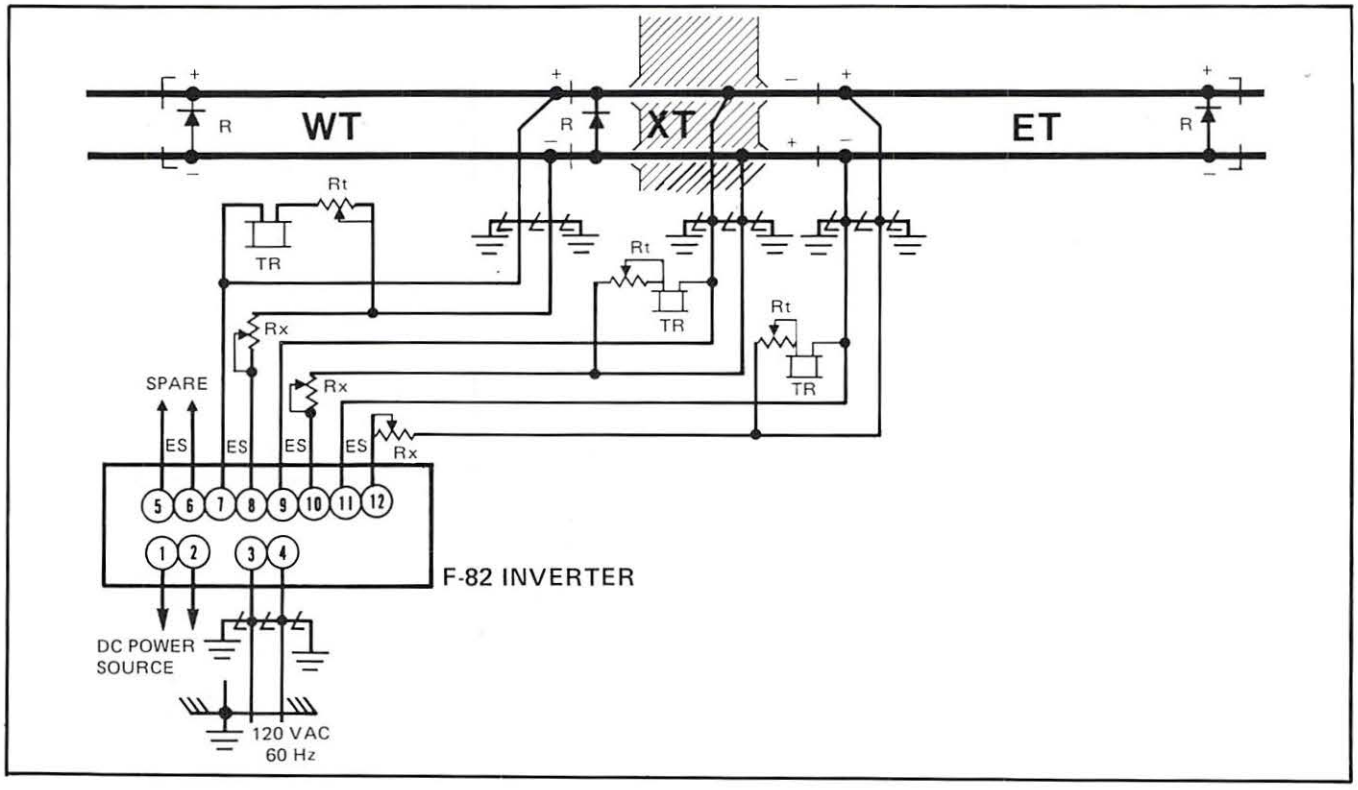

FOR APPLICATION, MAINTENANCE, AND DETAILED PARTS LIST REFER TO SM 6137

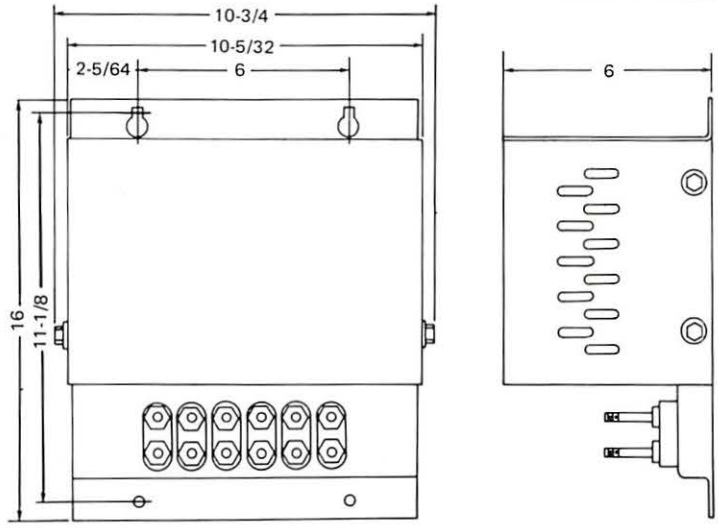

TOP VIEW SIDE VIEW

PART NUMBER	DESCRIPTION
N451033-4101	F-82 INVERTER, DC to AC

Weight: 23 lbs., approx.

F-82 DC TO AC INVERTER

The US&S F-82 Inverter is a solid state power source specifically designed for use in Type "C" track circuit applications. A single F-82 unit can be used as the low voltage ac power source for up to four track circuits. The unit normally operates from 120 vac commercial power, but automatically transfers to standby batteries in the event of loss of ac power. Input power transfer is accomplished within the F-82 unit; so external transfer circuitry is not required. In the standby mode of operation, the F-82 converts dc to ac at a high efficiency to minimize battery drain.

The components are housed in a rugged sheet steel enclosure designed for either shelf or wall mounting using standard hardware. Electrical connections are made to external AAR terminals mounted on the front panel of the unit. Refer to back page for mounting dimensions.

CHARACTERISTICS

POWER INPUT
- Normal Operation:
  - Input voltage ..... 120 vac, 60 Hz (nom.)
  - Current ..... 1 amp max.
- Standby Operation:
  - Input voltage ..... 12 vdc (nom.)
  - Current ..... 10 amp. max.

POWER OUTPUT (track)
- Normal Operation:
  - Track output voltage ..... 5.5 vac
  - Sine waves, each secondary.
  - Current ..... 3.5 amp each secondary
- Standby Operation:
  - Track output voltage ..... 6.5 vac
  - Square waves, each secondary.
  - Current ..... 3.5 amp each secondary

Reverse battery protection ..... built-in
Operating temperature range .... $-40^{o}C$ to $+70^{o}C$

FEATURES

- Low maintenance.
- Automatic power transfer.
- Easy to install.
- Four (4) track output capability.
- Reverse battery protection built in.
- High efficiency operation.
- Reliable and stable in extreme temperature changes.
- Solid state design inverter circuitry.
- Wall or shelf mounted.
- AAR terminals for external connections.

APPLICATION

A typical highway crossing application utilizing three type "C" track circuits utilizing an F-82 Inverter is shown in the diagram below. The track rectifier located on the opposite end of the track circuit, provides a half wave rectified ac signal which will normally energize the dc relay. When a train occupies the track circuit, the rectifier is shunted and the dc relay is de-energized.

All four F-82 outputs could be used in a two track highway crossing system, if type "C" track circuits are utilized in the approaches.

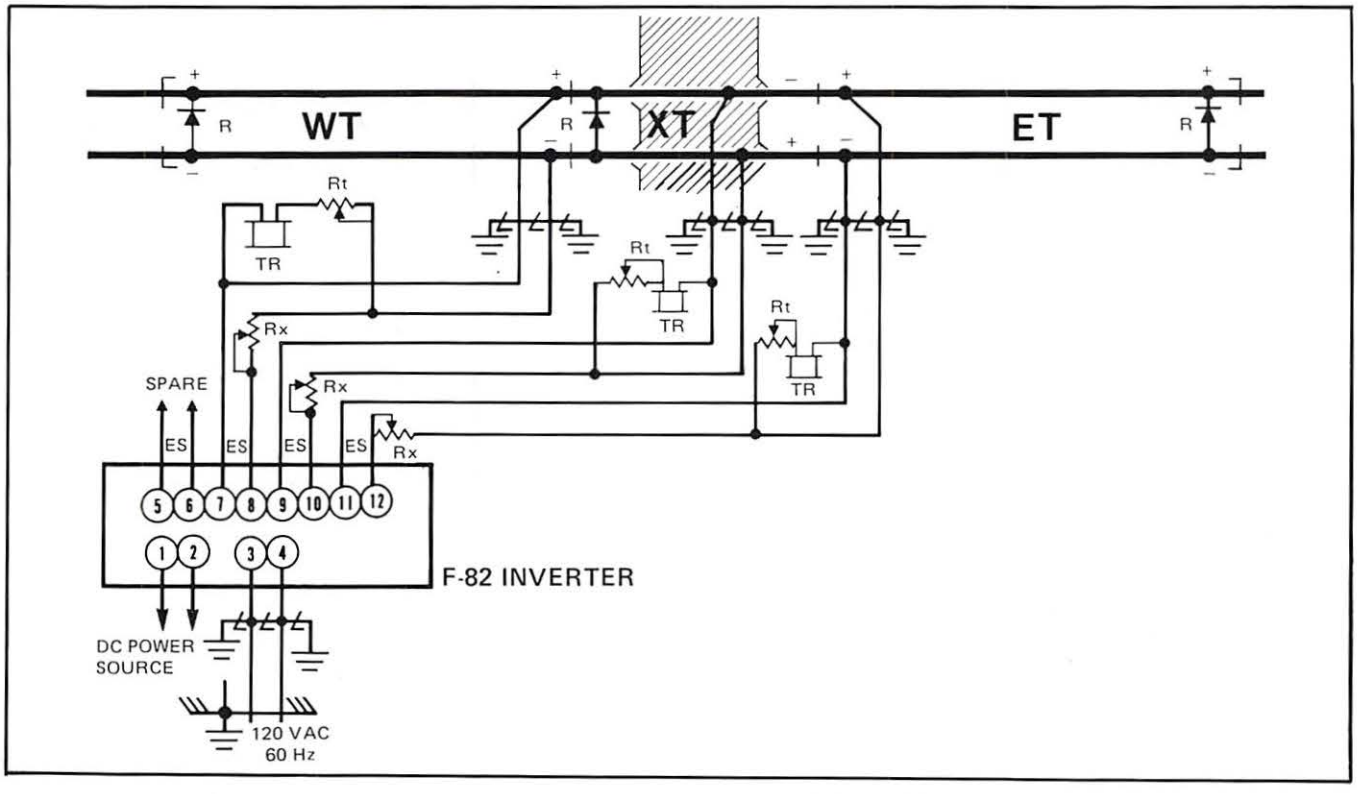

FOR APPLICATION, MAINTENANCE, AND DETAILED PARTS LIST REFER TO SM 6137

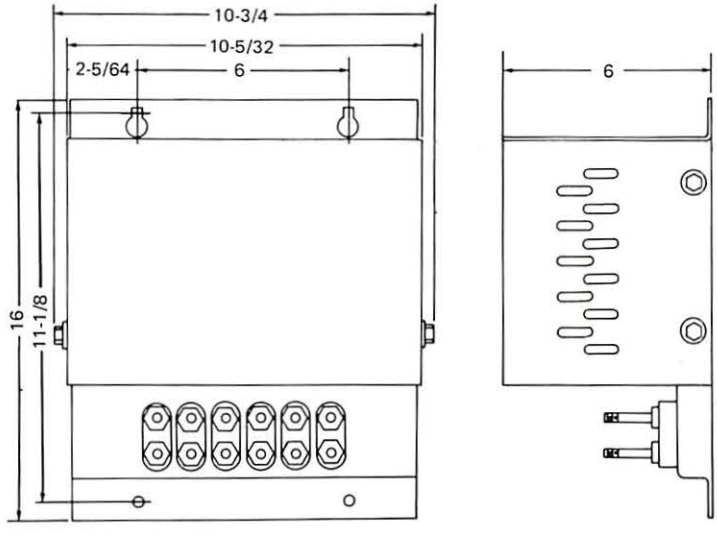

TOP VIEW SIDE VIEW

PART NUMBER	DESCRIPTION
N451033-4101	F-82 INVERTER, DC to AC

Weight: 23 lbs., approx.

TRANSFORMER CROSS REFERENCE SUBSTITUTION CHARTS

The cross-reference substitution charts that follow will aid in ordering replacement transformers when the old model designation and part number is known.

The charts are separated into two main groups: 1.) W-400 transformers which provide direct replacement for active units of the old style W5, W7, W10, and W11 transformers with ratings up to 400 VA, and 2.) W-800 transformers which provide direct replacement for the active units of the old style W20 transformers with ratings up to 800 VA.

The information provided in these charts is arranged in two columns. The first column lists the type and part number of the old models; the second column lists the corresponding part number for the new models. The lists are arranged alpha-numerically by the old type designation.

W-400 TRANSFORMERS (RSE-7D1)

OLD MODELS		NEW MODELS
Type	Part No.	Part No.
W5	N107000	N451428–0102
W5	N218750	–0102
W5	N231050	–0102
W5	N273481	–0102
W7	N219972 (Decoding Transformer)	N451428–0110
W7	N226832 (Indication Transformer)	N451428–0111
W10	N156455	N451428–0101
W10	N161894	–0101
W10	N162844	–0101
W10	N163619	–0109
W10	N169294	–0106
W10	N175942	N451428–0102
W10	N210906	–0103
W10	N214358	–0104
W10	N230595	–0103
W10	N308568	–0101
W10	N339615	–0102
W11	N158698	N451428–0102
W11	N171840*	–0102
W11	N171840**	–0106
W11	N346799	–0104
W11	N385847	–0113

*For 120 volt applications only
**For 240 volt applications only

W-800 TRANSFORMERS (RSE-7D2)

OLD MODELS		NEW MODELS
Type	Part No.	Part No.
W20	N168176	N451469–0101
W20	N172150	–0104
W20	N176466	–0101
W20	N177319	–0102
W20	N250714	–0105
W20	N277158	–0104
W20	N288262	–0101
W20	N297709	–0106
W20	N385815	–0101
W20	N433514	–0105

W-400 AIR COOLED TRANSFORMERS

US&S W-400 Air Cooled Transformers are manufactured in a wide variety of input/output combinations to satisfy most requirements. (Refer to tabulation on page 2 for ratings available.) These transformers, with improved efficiency are designed for long life, and can be used for track circuit feed, signal lighting, and other general purposes. In addition, special application transformers are available for decoding and indication use.

W-400 Transformers are air cooled, consisting of a wound coil and laminations mounted in a sheet steel housing. The coil leads are brought out to terminal posts mounted on a molded terminal board, which is silk screened and contains all transformer operational information. Both the primary and secondary connections are made at the top of the transformer.

The "indication" transformer is designed for use in coded CTC Systems. The transformer has one primary (two sections) and one secondary with a 0.010 air gap.

FEATURES

- Meets or exceeds AAR spefications.
- 120 or 240 volts input.
- Insulation to withstand 3000 volts.
- Wall or shelf mounted.
- Wide range of capacities - high efficiency.
- Adjustable secondaries - adjustments additive.

ORDERING INFORMATION

Transformers available are listed by their rating in the following tabulation. The operational data for each transformer is shown by illustrations on the following pages. These illustrations are divided into 120 volt, 240 volt, and special application categories. *Order by Part Number and full description.*

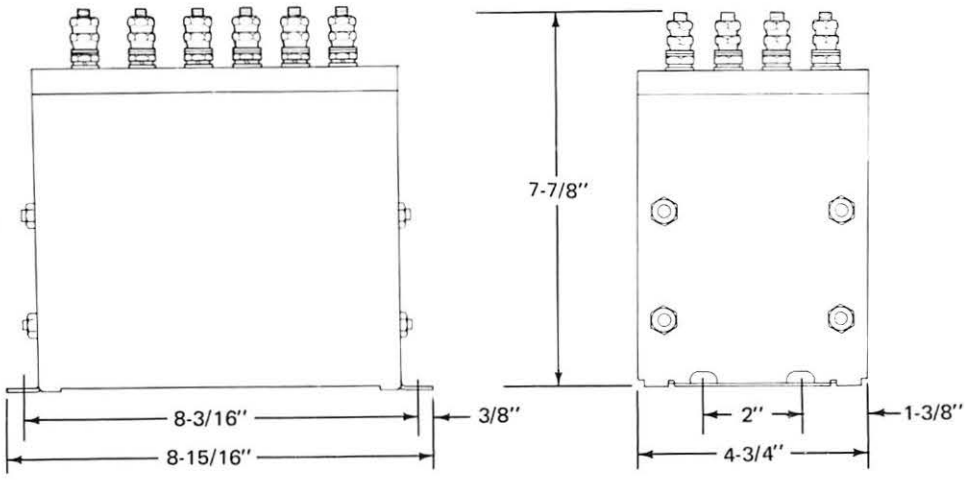

REF.	PART NO.	DESCRIPTION
A	N451428-0101	TRANSFORMER, 120/114V, 60/100 Hz, VA 360
B	N451428-0102	TRANSFORMER, 120/114V, 60/100 Hz, VA 360
C	N451428-0103	TRANSFORMER, 120/114V, 60/100 Hz, VA 353
D	N451428-0104	TRANSFORMER, 120/114V, 60/100 Hz, VA 380
E	N451428-0106	TRANSFORMER, 240/228V, 60/100 Hz, VA 360
F	N451428-0109	TRANSFORMER, 240/228V, 60/100 Hz, VA 360
G	N451428-0110	DECODING TRANSFORMER, 10 VDC, 1.25/3 Hz
H	N451428-0111	INDICATION TRANSFORMER

NOTE: For additional information on the transformers, refer to service manual SM5994.

120 VOLT TRANSFORMERS

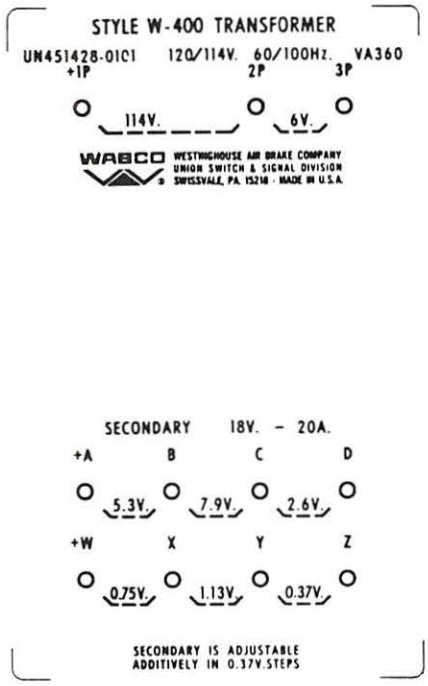

N451428-0101

A

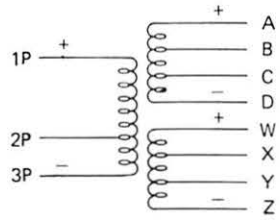

SCHEMATIC
N451428-0101

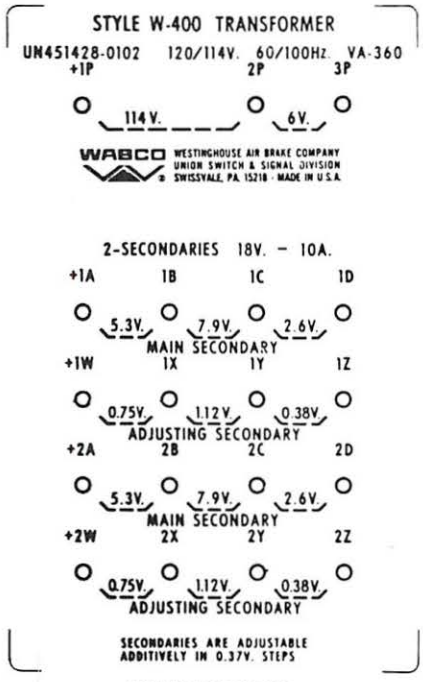

N451428-0102

B

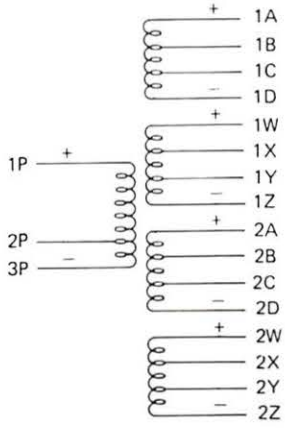

SCHEMATIC
N451428-0102

120 VOLT TRANSFORMERS

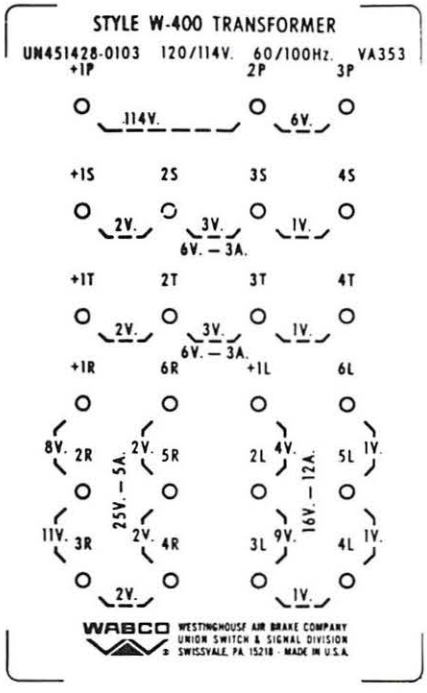

N451428-0103

C

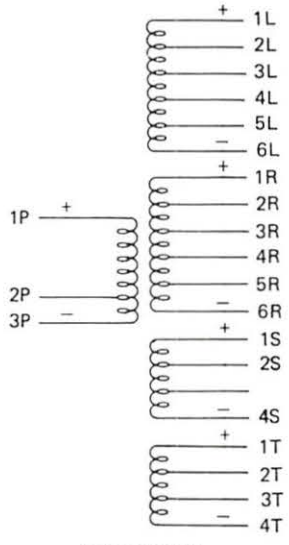

SCHEMATIC
N451428-0103

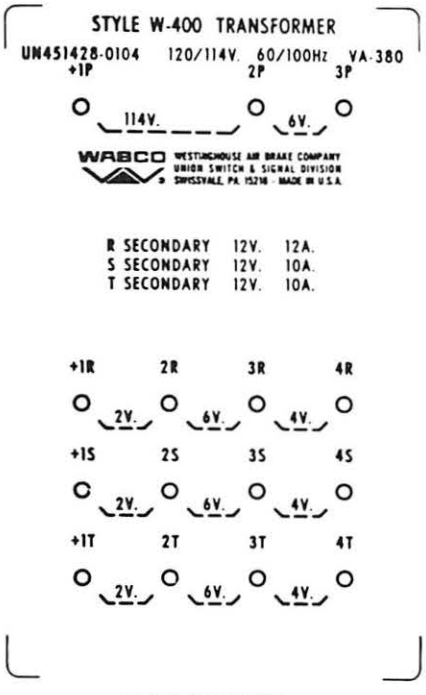

N451428-0104

D

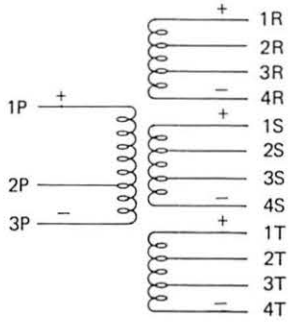

SCHEMATIC
N451428-0104

240 VOLT TRANSFORMERS

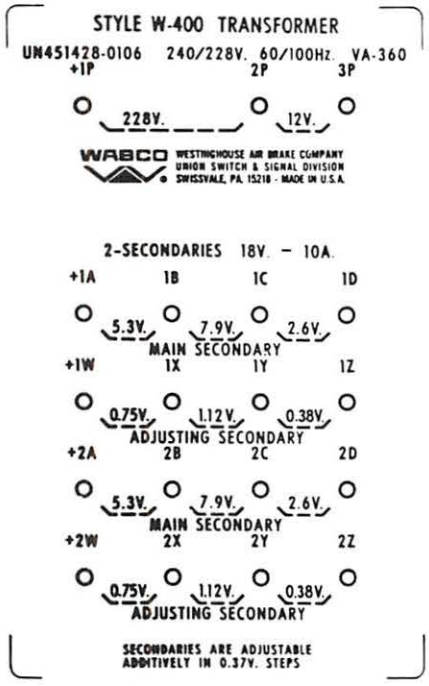

N451428-0106

E

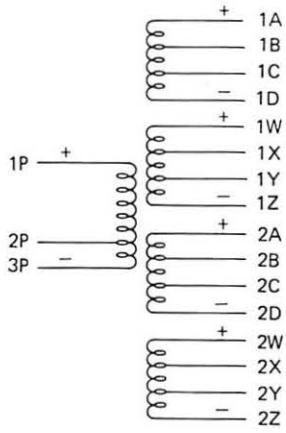

SCHEMATIC
N451428-0106

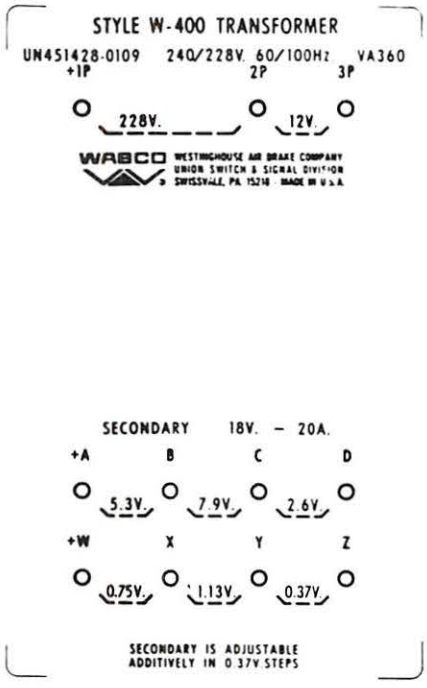

N451428-0109

F

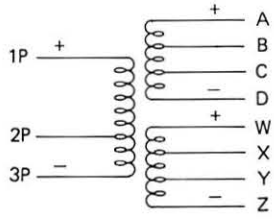

SCHEMATIC
N451428-0109

DECODING TRANSFORMER

STYLE W-400 TRANSFORMER
UN451428-0110 10 VDC 1.25/3Hz.
DECODING TRANSFORMER

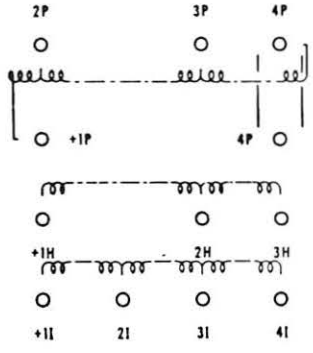

WABCO WESTINGHOUSE AIR BRAKE COMPANY
UNION SWITCH & SIGNAL DIVISION
SWISSVALE, PA. 15218 MADE IN U.S.A.

N451428-0110

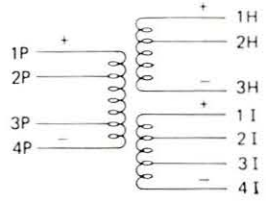

SCHEMATIC
N451428-0110

G

INDICATION TRANSFORMER

STYLE W-400 TRANSFORMER
UN451428-0111 INDICATION TRANSFORMER
WITH AIR GAP—FOR USE IN CODED CTC SYSTEMS

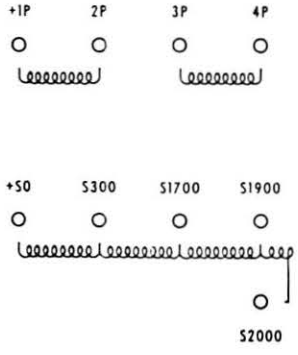

WABCO WESTINGHOUSE AIR BRAKE COMPANY
UNION SWITCH & SIGNAL DIVISION
SWISSVALE, PA. 15218 MADE IN U.S.A.

N451428-0111

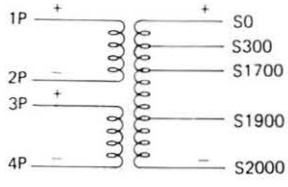

SCHEMATIC
N451428-0111

H

UNION SWITCH & SIGNAL DIVISION
AMERICAN STANDARD INC. / SWISSVALE, PA 15218

W-800 AIR COOLED TRANSFORMERS

U S & S W-800 Air Cooled transformers are provided to supplement the U S & S W-400 Air Cooled Transformers in those situations requiring a higher capacity with a wide variety of input/output combinations. (Refer to tabulation on page 2 for ratings available.) These transformers, with improved efficiency and designed for long life, can be used in all signal applications where long trouble free operation is required.

The transformers, designed for indoor use only, are air cooled, consisting of a wound coil and laminations mounted in a sheet steel housing. The coil leads are brought out to terminal posts mounted on a molded terminal board, which is silk screened and contains all transformer operational information. Both primary and secondary connections are made at the top of the transformer.

- Meets or exceeds AAR specifications.
- 115, 120, or 240 volt input.
- Insulation to withstand 3000 volts.
- Wall, shelf, or rack mounted.
- Wide range of capacities — high efficiency.
- Adjustable secondaries — adjustments additive.

ORDERING INFORMATION

Transformers available are listed by their rating in the following tabulation. The operational data for each transformer is shown by illustrations on the following pages. These illustrations are divided into 115 volt, 120 volt, and 240 volt primary categories. ***Order by Part Number and full description.***

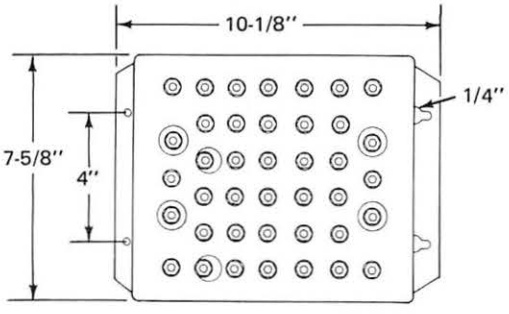

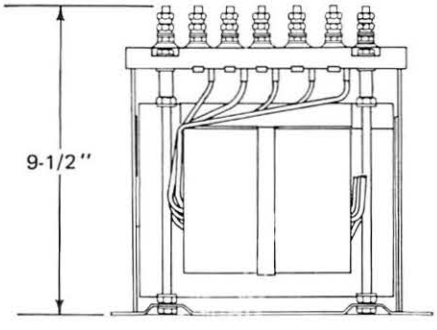

ACCESSORIES INCLUDED (QUANTITIES AS REQUIRED)	
DESCRIPTION	PART NO.
TOP WASHER	J047818
TOP NUT	M029101
BINDING NUT	M029103
JUMPER	N143684

REF.	PART NO.	DESCRIPTION
A	N451469-0106	TRANSFORMER, 115/100V, 25/100 Hz, 460 VA
B	N451469-0101	TRANSFORMER, 120/114V, 60/100 Hz, 720 VA
C	N451469-0104	TRANSFORMER, 120/114V, 60/100 Hz, 740 VA
D	N451469-0102	TRANSFORMER, 240/228V, 60/100 Hz, 720 VA
E	N451469-0105	TRANSFORMER, 240/228V, 60/100 Hz, 744 VA

NOTE: For additional information on the transformers, refer to service manual SM6007.

115 VOLT TRANSFORMER

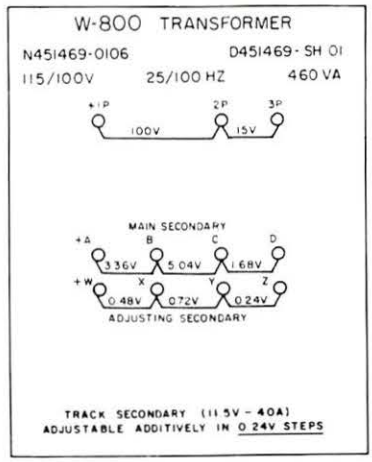

N451469-0106

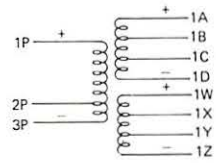

SCHEMATIC
N451469-0106

A

120 VOLT TRANSFORMERS

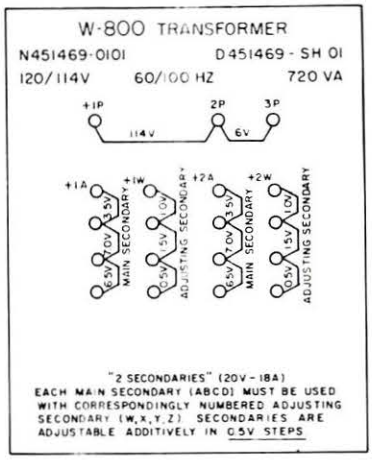

N451469-0101

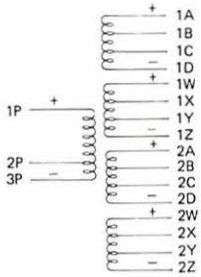

SCHEMATIC
N451469-0101

B

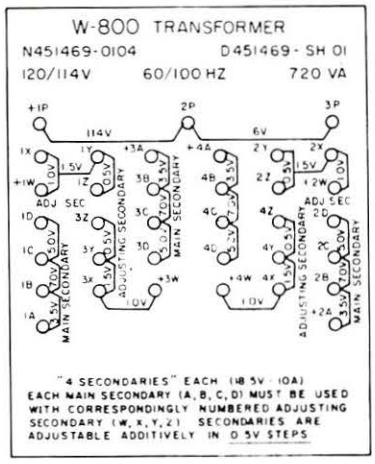

N451469-0104

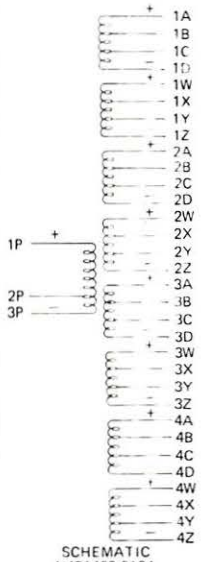

SCHEMATIC
N451469-0104

C

240 VOLT TRANSFORMERS

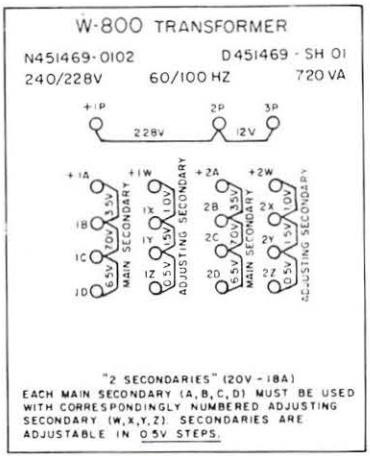

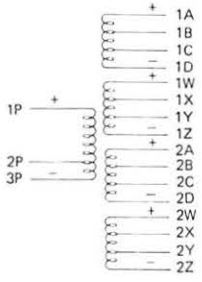

SCHEMATIC
N451469-0102

N451469-0102

D

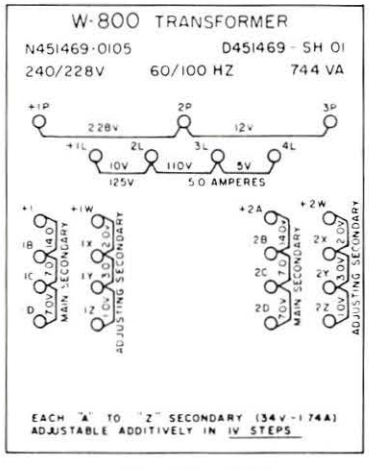

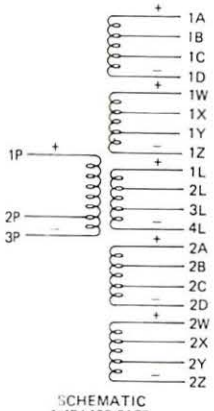

SCHEMATIC
N451469-0105

N451469-0105

E

BATTERY CHARGERS
CVF SERIES

The CVF Battery Chargers are designed to charge or to maintain at a constant state of charge, both Ni-Cad or lead acid batteries of various cell and voltage configurations. The CVF Charger is fully automatic and meets AAR's 3000v dialectric requirement.

DESCRIPTION

The CVF Chargers are self-contained units designed for stand-alone or wall mounted installations. All interior components are mounted on a U-shaped chassis. A one-piece cover slips over the chassis to form the exterior case. All connections are made to the front panel and are easy to reach. Four large input terminals provide for either 120 or 240 vac input. A grounding terminal is located just below the input terminals. A power light indicates when the unit is in operation. An output adjustment lever and ammeter control and show the output rate of charge. The dc voltage output terminals are mounted on the front. The top of the charger is stenciled with a reference chart showing number of cells and voltages for NiCad and lead acid batteries used in railway signaling aplications. (See Table 1)

Two models are available: one having output voltages of 0-19 vdc, the other ranges from 16-30 vdc.

OPERATION

The normal operation of the battery charger will be to supply the fixed load and fluctuating load as they may occur in the system. The set-up procedure when done properly will keep the batteries charged and supply overloads up to the charger's maximum output. The charger is capable of supplying 15 amperes continuously and is designed to have current limiting of approximately 24 amperes maximum, depending on the voltage setting of the powerstat. A ferro-resonant transformer is incorporated to compensate for in-coming line voltage variations.

The charger is protected from possible over temperature operation with an automatic type thermal overload. If this condition occurs, the charger will cycle "on" and "off" as thermal overload protection heats and cools and protects the charger in case of reverse polarity connection. As the batteries become charged, the battery charger will return to its normal operation. No new voltage setting of the charger is required.

FEATURES

- Ammeter, 0 to 30 amp. nominal
- Pilot light indicates on/off.
- Voltage adjustment with lock.
- Automatic thermal overload protection.
- Reverse polarity protection.
- Charges lead acid or Ni-Cad batteries.
- Fully automatic.
- Meets AAR requirements.

UNION SWITCH & SIGNAL

SPECIFICATIONS

Physical Characteristics

Height: 8½" over case
10" over mounting bracket.
Width: 11" across face.
Depth: 7½" normal, 9½" maximum.
Weight: 25 lbs. - 0-19 vdc unit.
29lbs. - 16-30 vdc unit.

Operating Characteristics

Input: 120 or 240 vac, 60 Hz ± 2Hz
Output: 0-19 vdc ± 1 volt, 15 amp. max. cont.
16-30 vdc ± 1 volt, 15 amp. max. cont.
Ripple; 1 vpp @ 15 amp. w/o battery
Line regulation: ±1% -100 to 130 vac.
Load regulation: less than 10%.
Ambient temperature: −40°C to +71°C (−40°F to +160°F)
Humidity: 0 to 100% relative.

Table 1

BATTERY TYPE		
NO. OF CELLS	NiCAD Volts	LEAD ACID Volts
5		11.0
6		13.1
7	9.7	15.3
8	11.1	17.5
9	12.5	19.7
10	13.9	21.9
11	15.3	24.1
12	16.7	26.3
13	18.1	
14	19.5	
15	20.9	
16	22.3	
17	23.7	
18	25.1	
19	26.4	
20	27.8	
21	29.2	

Values given are approx. 70°F.

BATTERY CHARGERS
CVF

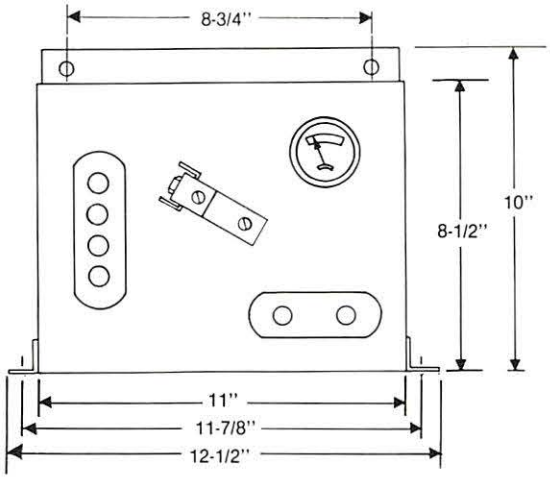

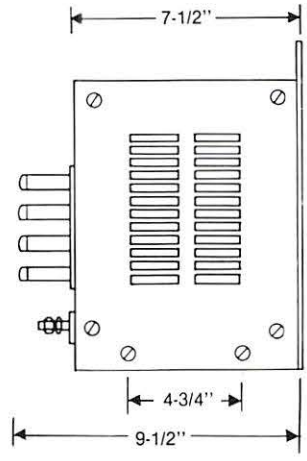

DESCRIPTION	PART NO.
0-19 VDC CHARGER	J726263
16-30 VDC CHARGER	J726269

NOTE: For complete detail parts list and additional information, refer to service manual SM6251.

TRAIN DETECTION SYSTEMS

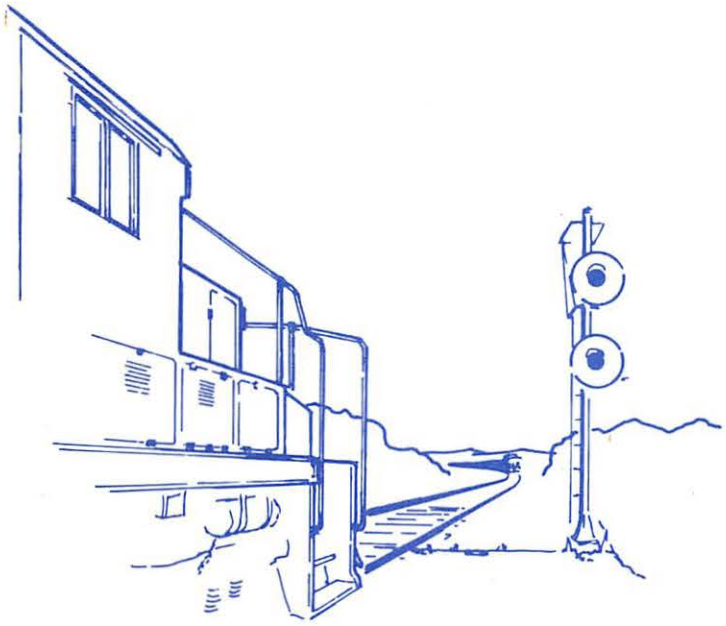

RSE-8

TRAIN DETECTION SYSTEMS

TRACK CIRCUITS

Type "C" Track Circuits RSE-8C1

AFO-IIC Audio Frequency Overlay Track Circuit Equipment RSE-8D1
Audio Track Transceiver ATT-10 . . . . . RSE-8D2
AFO-I Audio Frequency Overlay Track Circuit Equipment RSE-8D3
Surge-Ripple Filter RSE-8D4
AF-200W Audio Frequency Transit Track Circuit System RSE-8D5

High Frequency Track Circuit (Yard Application) RSE-8E1
AW-10 Directional Area Warning Device (Grade Crossing Warning) RSE-8E2

FR-HI Shunt Track Circuit (Yard Application) RSE-8F1

DETECTION EQUIPMENT

SRD-5 Self-Restoring Dragging Equipment Detector RSE-8G1

WD-30 and WD-30 Wheel Detector RSE-8H1

MM-25 Motion Monitor Track Circuit RSE-8J1
PM-10 Presence Monitor RSE-8J2

Electrocoder EC-10 Code Generator RSE-8K2

Impedance Bonds, AC and DC RSE-8M1

TYPE "C" TRACK CIRCUITS

To satisfy the need for an economical, reliable control package for grade crossing warning applications, US&S has designed the Type "C" track circuit.

This track circuit scheme is engineered for easy installation and maintenance. The track circuit equipment is housed in an equipment case which is conveniently located at, or near, the crossing.

All US&S highway crossing control packages feature design principles using vital relays along with other highly reliable components to meet all the requirements of the Association of American Railroads (AAR), Department of Transportaion (DOT) and Federal Railroad Administration (FRA).

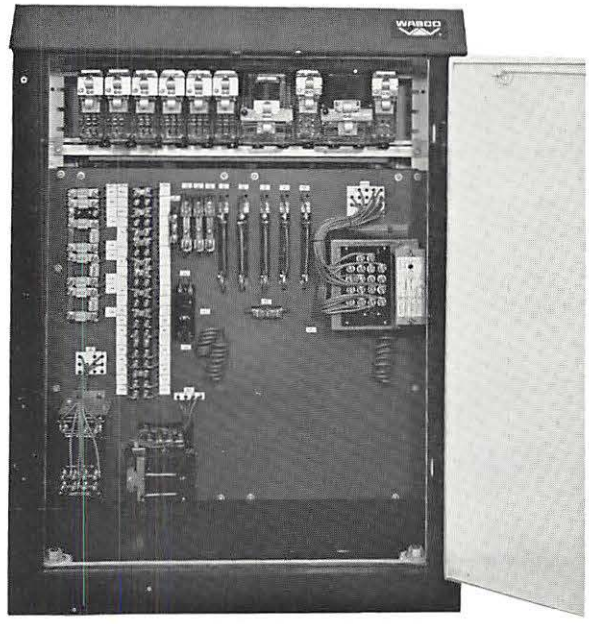

TYPICAL US&S FACTORY WIRED CASE WITH CONTROL EQUIPMENT FEATURING VITAL WALL MOUNTED PLUG-IN RELAYS. (STORAGE BATTERY SPACE IS PROVIDED INSIDE THE CASE.)

FUNCTIONAL DESCRIPTION

The Type "C" Track Circuit is an ac-dc track circuit designed to detect the presence of a train. A dc relay is connected across an ac power source which is connected to the rails. A track rectifier is also connected across the rails at the opposite end of the track circuit providing a halfwave shunt across the relay coil. A typical Type "C" Track Circuit is shown on the back.

This rectified ac signal energizes the relay. When the rectifier is shunted by the presence of a train on the track circuit, the rail potential is reduced resulting in the dc relay receiving a low power ac wave. This combination of events causes the relay to become de-energized, thus providing means capable of initiating grade crossing warning.

Type "C" Track Circuits must be isolated with insulated rail joints and all rail ends within the track circuit must be bonded to ensure proper electrical continuity. This type of track circuit is economical and provides good shunting characteristics where rails tend to be rusty.

Different track circuit arrangements are used to determine track occupancy, depending upon track configuration and train movements. These include single and double track with directional control, and single and double track with direction control and siding with dc area warning.

For more specific details, applications and ordering information on Type "C" Track Circuit, refer to Grade Crossing Warning Equipment section of this catalog, RSE-10. For information on our C-1 and C-2 versons of ac-dc circuits, contact your US&S representative.

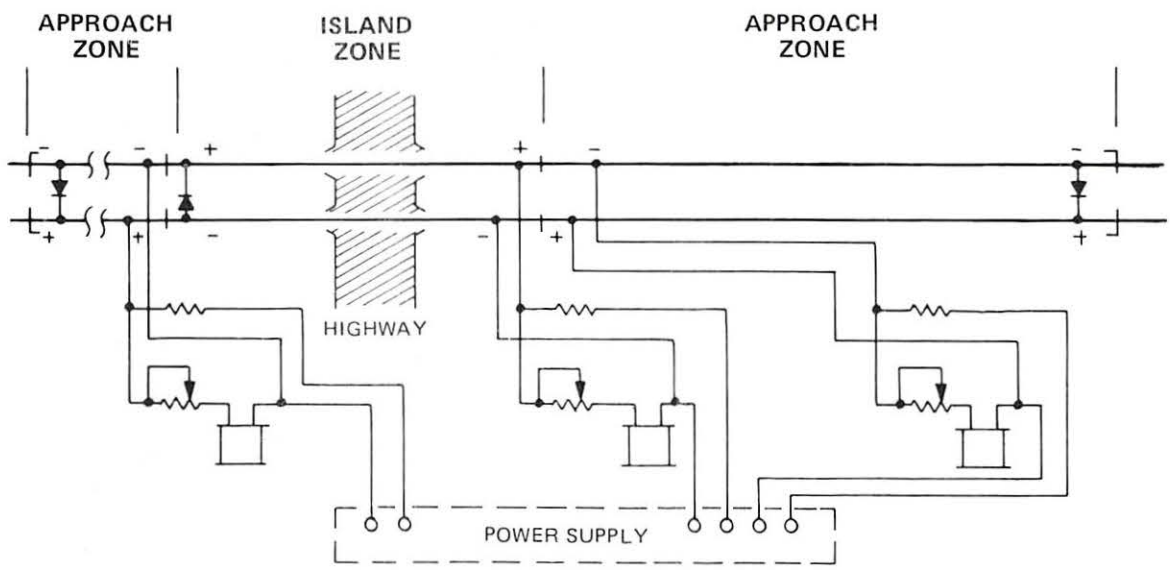

TYPICAL TYPE "C" TRACK CIRCUIT SCHEME

AFO-IIC AUDIO FREQUENCY OVERLAY TRACK CIRCUIT EQUIPMENT

Union Switch & Signal's series of audio frequency overlay track circuit equipment is an improved version of the well-proven and highly reliable AFO-IIB series of equipment.

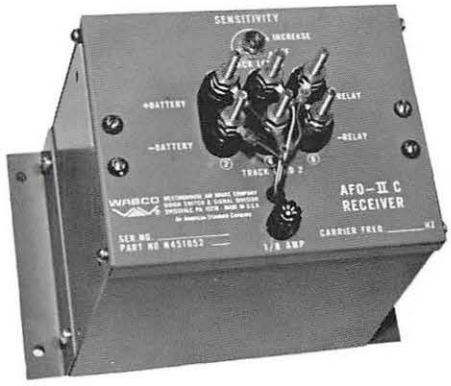

AFO-IIC RECEIVER

AFO-IIC TRANSMITTER

The new improved AFO-IIC provides greater flexibility in track circuit selection than the earlier series. AFO-IIC transmitters and receivers are directly interchangeable and compatible with previously installed AFO-II and AFO-IIB equipment, and provide two distinct advantages:

1.) FREQUENCY SELECTION — AFO-IIC equipment allows infinite frequency availability between 800 and 5000 Hz. This provides the user greater flexibility in applying new or replacement AFO in territories where frequency compatibility with other overlay equipment is required.

2.) IMPROVED MODULATION — AFO-IIC operation is improved by using sine wave modulation of the carrier frequency instead of square wave modulation as previously used. This reduces harmonic noise applied to the track and minimizes interference to other equipment.

DESCRIPTION

The AFO-IIC series includes a transmitter and a receiver, which provides a typical track circuit to detect track occupancy. All circuitry and components in the transmitter and receiver are mounted on printed circuit boards, located in individual sheet steel enclosures. The receiver has two printed circuit boards and the transmitter has one board. All boards are removable. Reverse polarity protection is provided in both units. A sensitivity adjustment is built into the receiver unit to obtain the proper shunting characteristics when track circuit adjustments are made in the field. The receiver and transmitter operate over a dc battery voltage range of 9.5 to 16.2 volts.

FEATURES

- No insulated rail joints required. Two AFO-IIC track circuits replace the conventional three track circuit scheme.
- Designed to provide any frequency between 800 and 5000 Hz for versatility in application.
- Easy to install - only one adjustment required. Standard AAR terminals.
- Carrier Frequency sine wave modulated.
- Compatible with motion detection equipment, existing AFO and dc track circuits.
- Removable printed circuit boards - easy replacement. Low maintenance.
- Built-in surge protection.
- Reverse polarity protection.
- Reliable and economical - meets or exceeds AAR requirements.

AAR terminals are provided on top of each unit for use in making external circuit connections. In addition, the fuseholder and receiver sensitivity control are mounted on the top cover. All circuitry is secured to the top cover, providing easy removal and ready access for repair.

The AFO-IIC transmitter and receiver units are designed for shelf, wall, or rack mounting, using standard mounting hardware. Refer to transmitter and receiver ordering tabulation for mounting dimensions.

SPECIFICATIONS

AFO-IIC TRANSMITTER

Input Voltage ..... 9.5 — 16.2 vdc
Input Current ..... 0.40 amp
Output Voltage ..... 5.0 v p-p
Output Impedance ..... 1 ohm
Operating Frequencies ..... See Table 1
Temperature Range ..... −40°C to +71°C
Surge Protection ..... Built-in

AFO-IIC RECEIVER

Input Voltage ..... 9.5 — 16.2 vdc
Input Current ..... 0.07 amp
Output Voltage (400 ohm relay) ..... 5.5 vdc
Signal Sensitivity ..... 5 mv rms minimum
Input Impedance ..... 1.25 ohm
Bandwidth ..... 3db at ±4.0% of assigned frequency
Operating Frequencies ..... See Table 1
Temperature Range ..... −40°C to +71°C
Surge Protection ..... Built-in

OPERATING FREQUENCIES

Transmitter and receiver units of any frequency in the range between 800 and 5000 Hz can be selected for application. Table 1 lists 23 specific frequencies that are standard AFO-IIC unit frequencies. Any frequency between 800 and 5000 Hz can be ordered (refer to table on page 4). There must be at least a 25% separation between the assigned frequencies of any equipment connected to the track, within a common block of several frequencies, between insulated joints. On adjacent tracks, in double track territory, the AFO frequencies should be assinged from two different classes. The closest frequencies in each of the two classes shall be at least 5% apart, based on the highest frequency. Consideration must be given to frequency selection when applying additional frequencies to existing AFO or motion detection track circuits to avoid interference problems.

Table 2 shows the frequency compatibility between some pre-selected AFO-IIC and motion monitor frequencies. Selection of other frequencies must be carefully analyzed to provide adequate frequency separation and to avoid interference between AFO-IIC and motion monitor.

Frequencies not compatible with the AFO-II track coupling units, as indicated in Table 1, must be applied in a track section where it is not necessary to bypass an insulated joint. Basic application rules must be followed when applying AFO-II track circuit equipment to ensure maximum effectiveness and security. Application information is provided in service manual SM6134. The frequency, as well as the part number must be specified when ordering units.

TABLE 1. FREQUENCY SELECTION

FREQUENCY RANGE DESIGNATION	AFO-II COUPLING UNIT FREQUENCY	FREQUENCY RANGE AFO-II C	MODULATION RATE
FR 1		800-875	18
FR 2	870	876-960	18
	885		
	930		
	945		
FR 3	980	961-1055	22
	1050		
FR 4	1120	1056-1155	22
FR 5	1180	1156-1265	22
	1215		
FR 6	1285	1266-1385	27
	1330		
FR 7	1420	1386-1520	27
	1520		
FR 8		1521-1665	27
FR 9	1660	1666-1825	39
FR 10	1860	1826-2000	39
	1945		
FR 11	2140	2001-2199	39
FR 12	2365	2191-2400	49
FR 13	2540	2401-2630	49
FR 14	2720	2631-2885	49
FR 15		2886-3160	68
FR 16	3360	3161-3465	68
	3410		
FR 17		3466-3800	68
FR 18		3801-4165	94
FR 19		4166-4560	94
FR 20		4561-5000	94

TABLE 2.
FREQUENCY ALLOCATION
FOR US&S VITAL AFO-IIC EQUIPMENT

AFO-II C FREQUENCY	MOTION MONITOR FREQUENCY
930 and 3410 Hz	207 Hz
1050 and 3360 Hz	230 Hz
885 and 1860 Hz	390 and 570 Hz
1330 and 3360 Hz	390 and 570 Hz
1050 and 2540 Hz	390 and 570 Hz
1120 and 2720 Hz	405 and 630 Hz
2140 and 1420 Hz	405 and 630 Hz
930 and 3410 Hz	405 and 630 Hz

APPLICATION

AFO-IIC track circuit equipment can be applied in a variety of track circuit configurations. For example, two overlapping approach track circuits take the place of three standard conventional track circuits with insulated joints. Essentially, the overlapping track circuits provide the center island circuit. See Figure 1. Insulated joints are only required if switch turnouts and frogs are located within the warning zone. If necessary, track coupling units are available to pass the AFO signal around existing insulated joints.

AFO track circuits can be superimposed on existing dc track circuits, and are frequently applied as wrap-around back-up track circuits for motion detection control systems. In areas where dc track circuits are applied, it may be necessary to pass the AFO signal in the rail around a pair of insulated joints, while blocking dc or other ac frequencies used on the same track section. The AFO track coupling unit is available for this purpose. Refer to Service Manual 6134 for further information in application and installation, and detail Parts List.

EXTERNAL RELAYS

Unlike the previous AFO equipment, the shunting sensitivity and track circuit definition of the new AFO-IIC Series are not affected by the characteristics of a vital relay. The AFO-IIC receiver incorporates an electronic level detector, simplifying the track relay requirements. US&S relays PN-150B (N322500-700 or -800 series) or DN-11B (N274069) are recommended. Other type relays such as PN-150BH or DN-22BH may be required, but a review of the application should be made before a need for these more sensitive relays is determined.

AUXILIARY EQUIPMENT

Track Coupling Unit The AFO-IIC track coupling unit is used for passing the AFO signal around a pair of insulated rail joints, while blocking dc, ac or other frequencies used on the same track section. There are four track coupling units available to pass any one of the six frequencies in each group for which it is tuned. All other frequencies will be blocked. See Table 1. The track coupling unit has the same dimensions as the AFO-IIC receiver and transmitter units, and is designed for shelf or wall mounting.

Blocking Reactor The purpose of the blocking reactor is to block the AFO signal while passing dc and low frequency ac. The blocking reactor has a dc resistance of 0.01 ohm and a current rating of 7 amperes. This reactor may be mounted on a relay rack, in a PN-150 space, or on a wall or shelf.

Lightning Arresters Lightning arresters are required to limit surge voltages. US&S provides both HI and LOW voltae arresters with or withou terminal block.

Surge-Ripple Filters Surge-Ripple Filters are used to smooth out the input voltage to transmitters and receivers. If the battery supply has a ripple, or ac signal greater than 0.5V peak-to-peak, a Surge-Ripple Filter must be used.

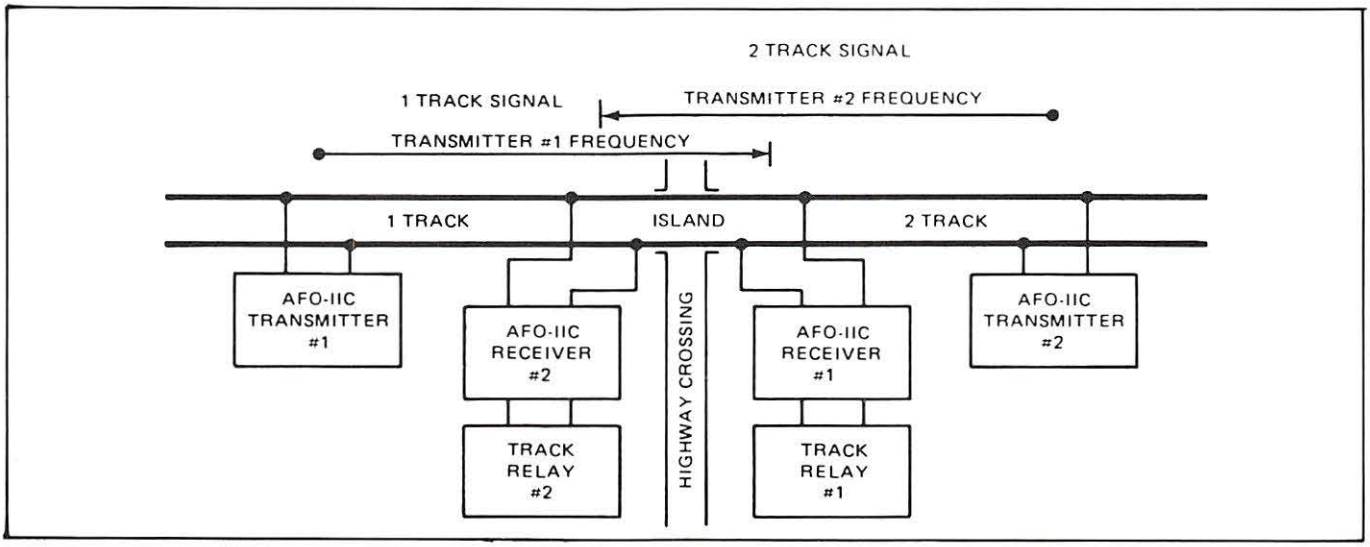

FIGURE 1
TYPICAL AFO-IIC HIGHWAY CROSSING LAYOUT WITH OVERLAPPING TRACK CIRCUITS

AFO-IIC RECEIVERS AND AFO-IIC TRANSMITTERS

AFO equipment is designed to operate over a normally expected variety of environmental conditions, however, electric propulsion equipment employing phase control or chopper control may create an excessive amount of electromagnetic interference in the audio spectrum, thereby causing improper and potentially unsafe operation of AFO receivers.

Proper application of AFO equipment under the conditions of interference described above requires special engineering analysis.

Please contact your US&S representative to discuss your application if you should have reason to believe that your AFO equipment will be subjected to audio frequency interference.

FREQ. RANGE Hz.[1]		AFO-IIC TRANSMITTER	AFO-IIC RECEIVER	TRACK COUPLING UNITS[2] - N451052—			
CARRIER	MOD.	N451052—	N451052—	GROUP 1	GROUP 2	GROUP 3	GROUP 4
870	18	2965	3165	—	—	—	—
885	18	2966	3166	1901	1902	1903	1904
930	18	2967	3167	1901	1902	1903	1904
945	18	2968	3168	1901	1902	1903	1904
980	22	2969	3169	1901	—	1903	—
1050	22	2970	3170	1901	—	1903	—
1120	22	2971	3171	—	1902	—	—
1180	22	2972	3172	—	—	1903	1904
1215	22	2973	3173	—	—	1903	1904
1285	27	2974	3174	1901	—	1903	—
1330	27	2975	3175	—	1902	—	1904
1420	27	2976	3176	—	1902	—	1904
1520	27	2977	3177	—	1902	—	1904
1660	27	2978	3178	—	—	1903	—
1860	39	2979	3179	1901	—	1903	—
1945	39	2980	3180	1901	—	1903	—
2140	39	2981	3181	—	1902	—	—
2365	49	2982	3182	—	—	—	1904
2540	49	2983	3183	1901	—	—	—
2720	49	2984	3184	—	1902	—	—
3360	68	2985	3185	1901	1902	—	—
3410	68	2986	3186	1901	1902	—	—
4565	94	2987	3187	—	—	—	—

NOTES

1.) If a unit between 800 and 5000 Hz is desired other than the ones listed above, order by stating AFO-IIC Transmitter or Receiver, N451052-XXXX, Carrier Frequency. _____.

2.) Where insulated joints are used, track coupling units are required.[2]

AFO-IIC RECEIVER

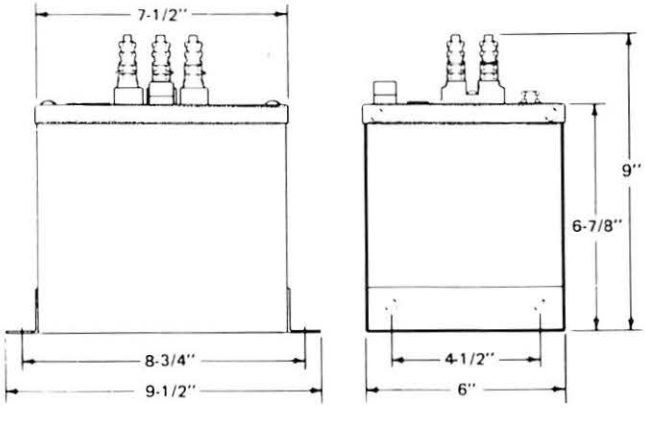

AUXILIARY EQUIPMENT	
PART NO.	DESCRIPTION
N451036-0302	BLOCKING REACTOR (Blocks all frequencies from 800 to 5000 Hz)
N451036-1701	BLOCKING REACTOR (Certain Microcode Applications)
N451036-0702	SURGE-RIPPLE FILTER, 12 vdc, 2.5 amps.
N322500-700 (or 800 series)	TRACK RELAY, PN-150 (Recommended, other types may be required depending on application.)
N451376-0302	MOUNTING BASE, PN-150 RELAY
N274069	TRACK RELAY, DN-11B (Recommended, other types may be required depending on application.)
N451552-0101	USG-A ARRESTER, L.V., w/o term. blk.
X451552-0301	USG-A ARRESTER, L.V., w/ term. blk
N451552-0201	USG-A ARRESTER, H.V., w/o term. blk.
X451552-0302	USG-A ARRESTER, H.V. w/ term. blk.

NOTE: For complete detail parts and additional information, refer to service manual SM6134.

AUDIO TRACK TRANSCEIVER
ATT-10

The ATT-10 is another in the line of reliable audio frequency track circuit equipments offered by US&S. This unit is designed for short range audio frequency overlay track circuits and is effective for track circuits up to 300 feet, even with ballast conditions as low as 3 ohms/1000 feet. The ATT-10 can be used for both series and shunt type track circuits.

The ATT-10 equipment is designed for highway crossing island circuits, switch lock protection circuits, and general vehicle detection. Circuit configurations are shown under typical application diagrams, page 4.

DESCRIPTION

The ATT-10 is a single unit (transceiver) containing a transmitter and receiver mounted on a common chassis. The solid state transmitter components are all located on a single printed circuit board. The same applies to the receiver. A sheet steel cover encloses and protects the transmitter and receiver components.

Internal wiring is brought out through a rubber grommet to AAR terminals mounted on the front of the case. External circuit connections are made to these terminals, which have applicable circuit markings to facilitate making connections. Also located on the front panel of the case is a screwdriver adjustment slot for setting the relay operating voltage level.

OPERATION

The transmitter, which is sinewave modulated to provide noise immunity and reduce the unnecessary sidebands produced by coded modulation, produces a high, audio frequency. This assigned frequency is introduced into the track through a pair of twisted wires which are connected to the rails. The point at which the wires are connected defines one end of the track circuit. The other end of the track circuit is the point at which the connection for the receiver is made.

Upon receiving the proper frequency, the receiver detects, amplifies, and rectifies the signal to provide a dc output to operate an external relay. The receiver detects the presence of a train through the loss of the audio frequency signal which is shunted by the train wheels.

MOUNTING

A convenient mounting bracket, which is an integral part of the case, facilitates wall or shelf mounting. Refer to Ordering Information for mounting dimensions.

FEATURES

- Low power requirements.
- Easy to install and maintain — compact space savings unit.
- Meets AAR requirements; standard AAR terminals.
- Reliable solid state components.
- Ideal for short range applications.
- Can be connected for either series or shunt type circuits.
- Built-in surge protection and reverse battery protection.

EQUIPMENT SPECIFICATIONS

Input Requirements

- 9 - 16 volts dc (12 VDC Nominal)
- 1 volt peak to peak ripple maximum
- 250 milliamperes
- Reverse battery and surge protection built-in

Output Characteristics

- 2.0 volts rms into a 15 ohm load
- Frequency (KHz) ± 1.0%
  12.28
  15.00
  20.00
- Modulation frequency 52 ± 5Hz

Sensitivity

- 12 millivolts rms
- 5 - 10 feet.

Temperature Range

−40°C to +71°C
(−40°F to +160°F)

Maximum Block Length

300 feet at 3 ohms per 1000 feet ballast

Overall Dimensions

Refer to Ordering Information

AUXILIARY EQUIPMENT

Lightning Arresters

Lightning arresters are required to limit surge voltages. US&S provides both HI and LOW voltage arresters with or without terminal block.

Surge-Ripple Filters

Surge-Ripple Filters are used to smooth out the input voltage to transmitters and receivers. If the battery supply has a ripple, or ac signal greater than 1.0 v peak-to-peak, a Surge-Ripple Filter must be used.

Relays

Output relays are listed in the Ordering Information Section.

APPLICATIONS

See back page for application diagrams.

Note: For detail parts and additional information, refer to service manual SM6026.

ATT-10 EQUIPMENT

ORDERING INFORMATION

Equipment required for the ATT-10 Audio Track Circuit is listed in the following tabulation. To insure receiving the proper Transceiver, specify operating frequency along with part number. In addition to the Transceiver Unit, a biased dc relay and lightning arresters are required. Part numbers for these items are listed in the tabulation below.

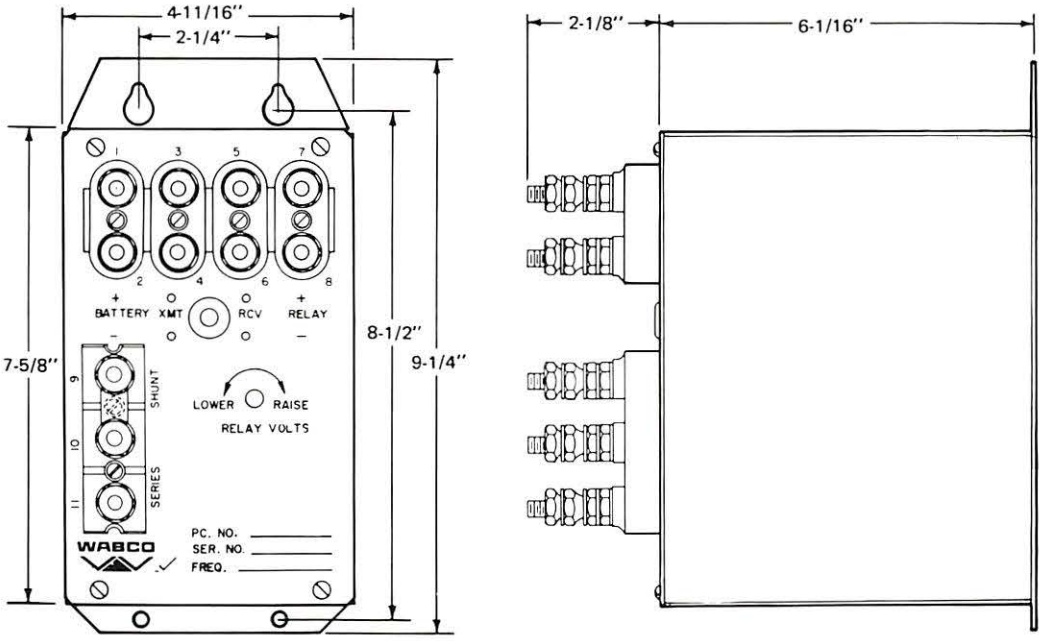

ATT-10 – TRANSCEIVERS	
N437360	12.28 KHZ
N437361	15.0 KHZ
N437362	20.0 KHZ
RELAY	
N322500-701	RELAY, PN–150B, Biased, 6FB, 400 ohms, DC plug-in type
N451376-0302	RELAY BASE
N274069	RELAY, DN-11B, Biased, 4FB, 500 ohms, DC shelf type
USG-A LIGHTNING ARRESTERS	
X451552-0301	USG-A Arrester, low voltage, with molded terminal block
X451552-0302	USG-A Arrester, high voltage, with molded terminal block
N451552-0101	USG-A Arrester, low voltage, without molded terminal block
N451552-0201	USG-A Arrester, high voltage, without molded terminal block
SURGE-RIPPLE FILTER	
N451036-0702	12 vdc - 2.5 amps

TYPICAL APPLICATION DIAGRAMS

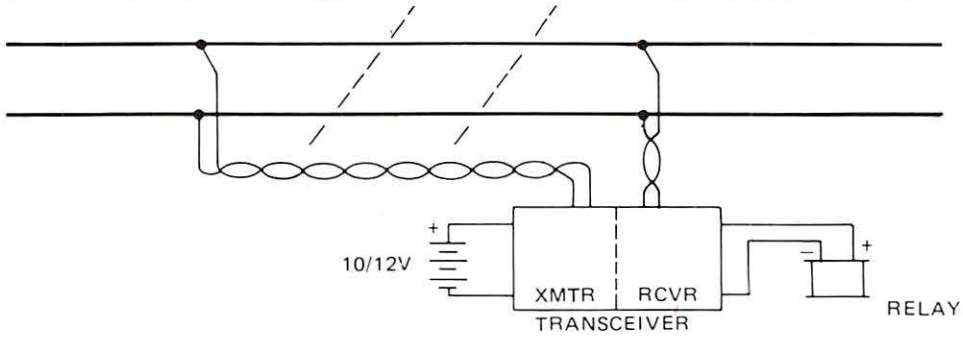

HIGHWAY CROSSING ISLAND CIRCUIT

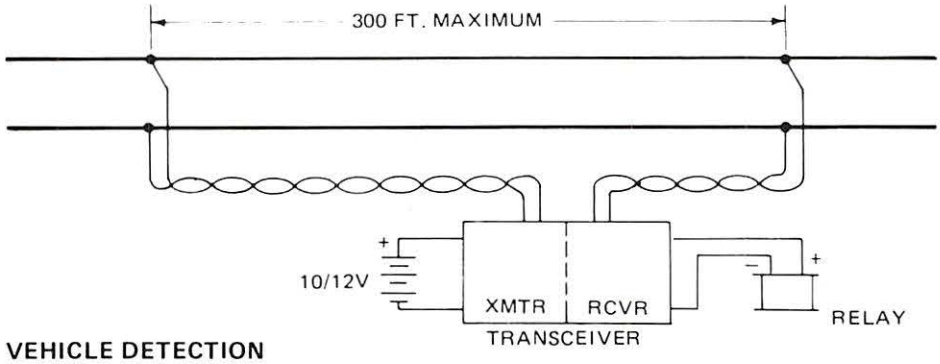

VEHICLE DETECTION

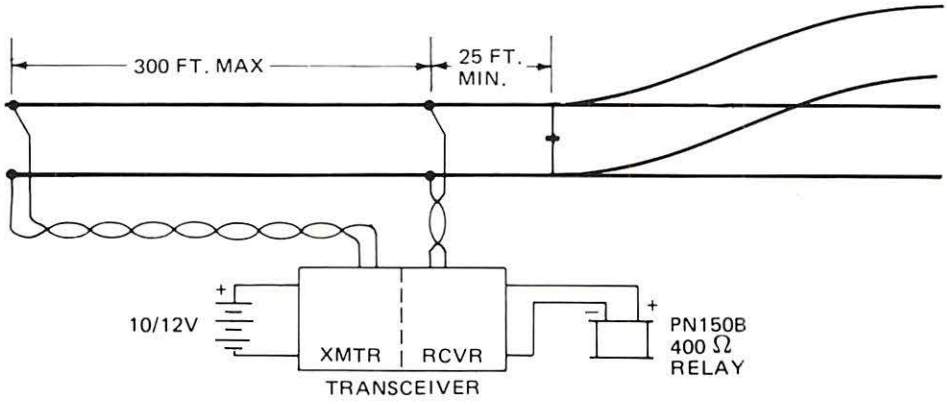

SWITCH LOCK PROTECTION – SHUNT TYPE TRACK CIRCUIT

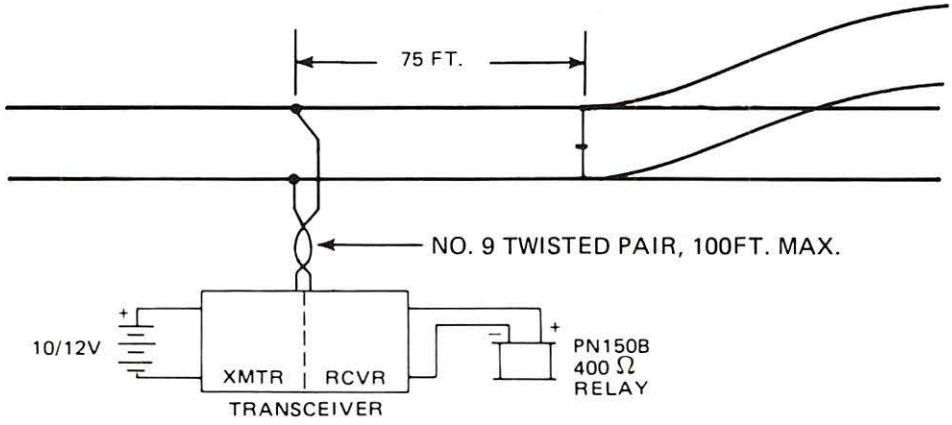

SWITCH LOCK PROTECTION – SERIES TYPE TRACK CIRCUIT

AFO-I AUDIO FREQUENCY OVERLAY TRACK CIRCUIT EQUIPMENT

The AFO-I track circuit equipment offered by US&S is ideally suited for both long and short range audio frequency overlay track circuit applications. The AFO-I audio frequency overlay track circuit can be used for track circuits up to 4000 feet long with ballast conditions as low as 3 ohms/1000 feet.

The AFO-I equipment is highly sensitive and provides the high degree of safety necessary in the control of modern, high speed, long approach highway crossings. In addition to highway crossing circuits, other applications of the AFO-I equipment are signal block indication and block signal track circuits.

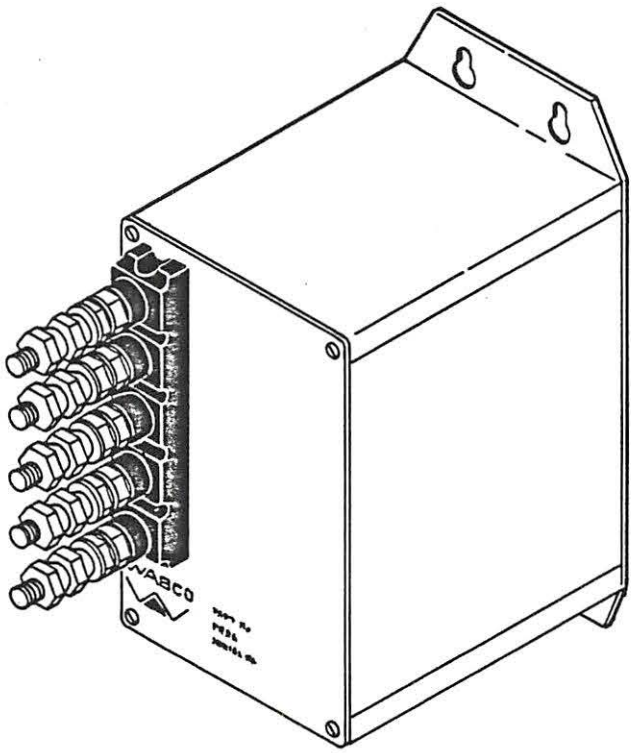

PRINTED IN U.S.A.

UNION SWITCH & SIGNAL DIVISION
AMERICAN STANDARD INC. / SWISSVALE, PA 15218

RSE-8D3
REV. 10/79

DESCRIPTION

The AFO-I equipment consists basically of a transmitter unit and a receiver unit, and optional equipment required to complete the system. Each unit is housed in a sheet steel housing containing a printed circuit board for mounting of components. External AAR terminals on the front of the case are provided to facilitate electrical connections on each unit. Located on the front of the receiver case is a screwdriver adjustment slot for adjustment of the relay operating voltage level.

USE

AFO-I equipment may be installed in a variety of configurations to best suit the application. For example, overlapping two AFO-I track circuits creates the equivalent of an "island" track circuit. Multiple receivers located at various intervals along the rails fed by one transmitter can provide circuitry for speed selection, time-out, or restart circuits. Track coupling units are available to pass the AFO-I signal around existing insulated rail joints. The transmitter unit power output is sufficient for track circuits up to 2500 feet long. By adding a jumper wire a higher power output is available for longer track circuits up to 4000 feet. The transmitter and receiver units are available in several frequencies to eliminate interference between track circuits in close proximity. Both units operate over a battery voltage range from 9 to 18 vdc.

TRACK CIRCUIT OPERATION

The transmitter unit introduces an assigned audio frequency into the track through a twisted wire pair connected to the rails. The point at which the transmitter wires are connected defines one end of the track circuit while the receiver unit connection defines the other end of the track circuit.

Upon receiving the assigned frequency, the receiver unit detects, amplifies, and rectifies the signal to provide a dc output to operate an external relay. The receiver unit detects the presence of a train through the loss of the audio frequency signal which is shunted by the train wheels.

FREQUENCY ASSIGNMENT

The AFO-I frequencies available for vital application are divided into two classes of six frequencies each, termed Class 1 and Class 2 as shown in the table. In general, Class 1 frequencies should be used for single track installations and for the first track of double track installations, with Class 2 frequencies being used for the second track. If more tracks are involved, the classes should be alternated to eliminate the possibility of interference due to inductive coupling between adjacent tracks.

OPERATING FREQUENCIES

CLASS 1 FREQUENCY (Hz)	CLASS 2 FREQUENCY (Hz)
1000	1125
1250	1375
1500	1640
1750	1875
2300	2175
2800	2675

RECEIVER RELAY

In order to optimize shunting characteristics of the AFO-I equipment, the use of WABCO PN-150BH or DN-22BH relay is recommended. These relays have a high release to working ratio that permits the relay to pick up faster as the train leaves the track circuit. This feature is especially significant when considering the "receding ringing" distance. This is the distance by which a train must be beyond the receiver track

connection (when leaving the AFO-I track circuit) in order for the receiver relay to pickup. Other 400 to 500 ohm relays can be used with the AFO-I equipment, but longer receding ringing distances will result. For relay characteristics, see catalog section RSE-4 and RSE-5.

OPTIONAL EQUIPMENT

The following optional equipment may be required, or desired, in certain AFO-I installations.

Track Coupling Unit

A track coupling unit is used when the AFO-I signal must be passed around insulated joints and the existing track circuit energy must be blocked. Two coupling units are available, one for each class of AFO-I frequencies. Since each unit has tuned taps for each frequency in its class, one unit is required for each frequency to be passed around the insulated joints. The track coupling unit has approximately the same dimensions as the AFO-I receiver and transmitter units, and is designed for shelf or wall mounting.

Blocking Reactor

The purpose of the blocking reactor is to block the AFO-I signal while passing dc and low frequency ac. The blocking reactor is a 1 millihenry inductor with a dc resistance of 0.01 ohm and a current rating of 7 amperes. This reactor may be mounted on a wall or shelf.

Lightning Arresters

In order to limit surge voltages due to lightning, lightning arresters should be employed. Both series and shunt U S & S USG-A arresters are recommended. The U S & S USG-A arresters may be mounted on a wall or on the top of a shelf but should not be mounted upside down on the underside of a shelf. For characteristics, see Catalog Section RSE-17A1, "USG-A Lightning Arresters".

MOUNTING

The AFO-I transmitter and receiver units are designed for shelf or wall mounting using standard mounting hardware. Refer to transmitter and receiver ordering tabulation for mounting dimensions.

FEATURES

- Low power requirements.
- Low maintenance - reliable solid state design.
- No insulated rail joints required.
- Transmitter unit has capability for higher power output if necessary for long track circuits. Receiver can be set for either high or low sensitivity.
- Easy installation - one adjustment for each receiver.
- Multiple frequencies for versatility in application.
- Can be superimposed on existing track circuits.
- Meets AAR requirements, standard AAR terminals.
- Compact space-saving unit.

CHARACTERISTICS

AFO-I Receiver

Input Voltage . . . . . 8.8 to 18.4 vdc

Input Current . . . . 0.05 ma at 12 vdc

Output Voltage . . 6 vdc nominal with a 400 ohm load and 5 mv rms input signal

Signal Sensitivity
Normal . . . . . 3 millivolts rms
Low . . . . . (with internal jumper removed) 5 millivolts rms

Input Impedance . . . 1 ohm nominal at center of assigned frequency

Output Load . . . 400 or 500 ohm relay (PN-150BH or DN-22BH relay, respectively)

Operating Frequencies . See Ordering Information

Temperature Range . . -40° C to +71° C (-40° F to +160° F)

AFO-I Transmitter

Input Voltage . . . . . 8.8 to 18.4 vdc

Input Current . Normal, 60 milliamps (when modified for higher output, 300 milliamps)

Output Voltage. Normal, 0.30 volts rms into 2 ohms (when modified for higher output, 1.0 volts rms into 2 ohms)

Output Impedance . . . . 1 ohm nominal

Operating Frequencies . See Ordering Information

Temperature Range . . -40° C to +71° C (-40° F to +160° F)

Min. Ballast Resistance . . . 3 ohms/ 1000 feet

TYPICAL APPLICATION DRAWING

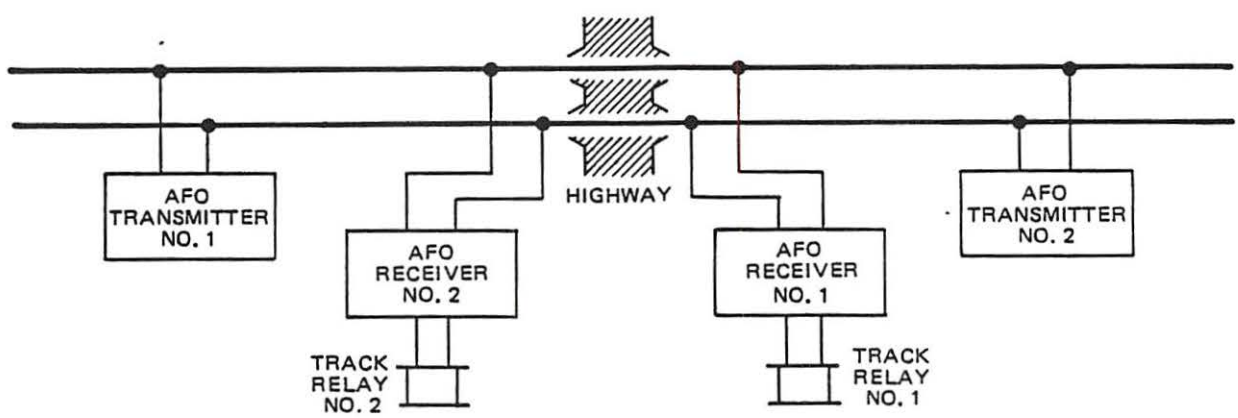

HIGHWAY CROSSING WARNING

NOTE: For additional information, specifications, and application data, see Service Manual 5707B.

AFO-I RECEIVER/TRANSMITTER

ORDERING INFORMATION

Order equipment by U S & S part number from the tabulation below. To aid in identification, specify frequency and whether receiver or transmitter.

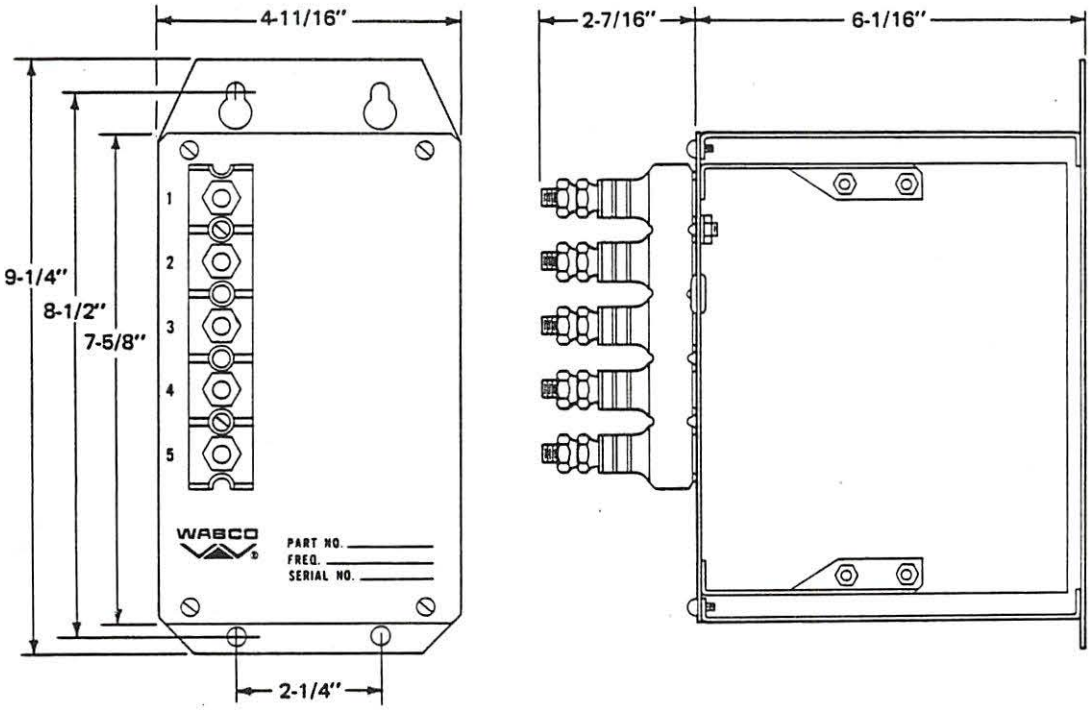

RECEIVERS

CLASS 1		CLASS 2	
FREQUENCY (Hz)	PART NO.	FREQUENCY (Hz)	PART NO.
1000	N437433	1125	N437434
1250	N437435	1375	N437436
1500	N437437	1640	N437438
1750	N437439	1875	N437440
2300	N437442	2175	N437441
2800	N437444	2675	N437443

TRANSMITTERS

CLASS 1		CLASS 2	
FREQUENCY (Hz)	PART NO.	FREQUENCY (Hz)	PART NO.
1000	N437379	1125	N437380
1250	N437381	1375	N437382
1500	N437383	1640	N437384
1750	N437385	1875	N437380
2300	N437388	2175	N437387
2800	N437390	2675	N437389

RELAYS AND OPTIONAL EQUIPMENT

ORDERING INFORMATION

Track relays, and in some cases track couplers and blocking reactors, are required to complete the installation. These items may be ordered from the following tabulation. In addition, filters and arresters are also listed. Consult your U S & S engineer for system planning and ordering assistance.

Order by Part Number and Description Shown in Caps

PART NO.	DESCRIPTION
N322511-006	RELAY, PN-150BH, 1FB-1B-1F, 400 ohms
N349904	MOUNTING BASE, PN-150BH Relay
N373702	RELAY, DN-22BH, 2FB, 500 ohms
N329150	TRACK COUPLER, for all Class 1 Frequencies
N397770	TRACK COUPLER, for all Class 2 Frequencies
N451036-0302	BLOCKING REACTOR (All Frequencies)
N382641	SURGE SUPPRESSOR UNIT
N451036-0702	SURGE-RIPPLE FILTER (2.5 amp)
N451552-0201	USG-A SERIES ARRESTER, without terminal block
N451552-0302	USG-A SERIES ARRESTER, with terminal block
N451552-0101	USG-A SHUNT ARRESTER, without terminal block
N451552-0301	USG-A SHUNT ARRESTER, with terminal block

SURGE-RIPPLE FILTER

The Surge-Ripple Filter satisfies the need for a dependable, long-life, low-cost device to protect Audio Frequency Overlay Track Circuit Equipment from lightning and other voltage surges. It also aids in reducing voltage ripple caused by battery chargers. This unit may be used in place of Lightning Surge Suppressor, N382641.

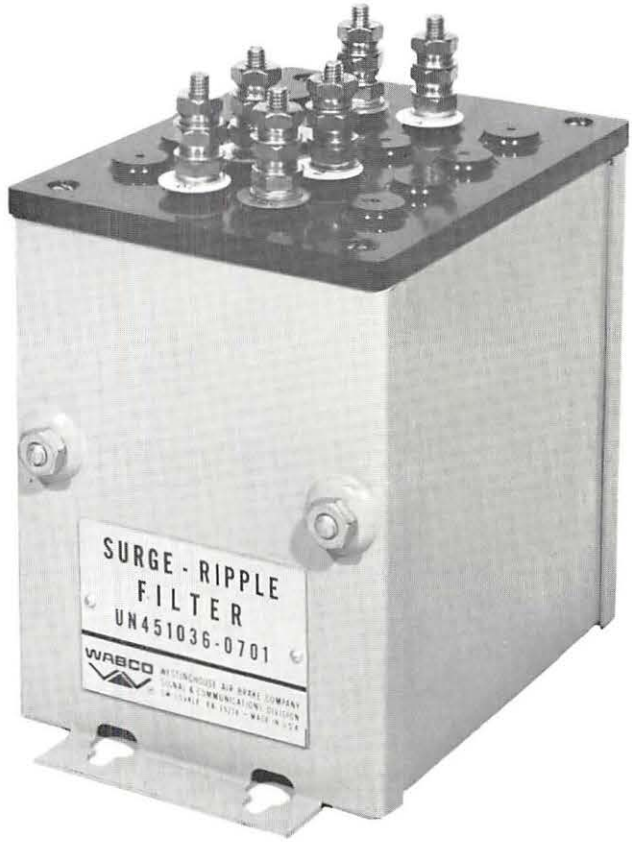

DESCRIPTION

The Surge-Ripple Filter consists of a reactor, constant voltage diode, an electrolytic capacitor and a terminal board. These components are mounted in a sheet steel case with removable end plates and side cover. The unit measures approximately 7-1/4 x 7-3/4 x 4-3/4 inches and is constructed so that all circuit components can be easily checked from the terminal posts.

OPERATION

The Surge-Ripple Filter is designed for use with a USG Lightning (Shunt) Arrester which is connected across the input of the filter. If two or more Surge-Ripple Filters located in a signal case are connected to the same battery bus, only one USG Lightning Arrester is required to protect the AFO units. The single USG Lightning Arrester should be connected between the battery bus and the nearest surge suppressor and located as near to this surge suppressor as practical. The arrester may be mounted directly on the unit between terminals B and N (see application drawing).

The diode used in this Surge-Ripple Filter is essentially a constant voltage device. When the surge voltage reaches the avalanche or breakthrough voltage of the diode, a low-value lightning surge of reverse polarity will pass through it in the high resistance direction, thus limiting the surge voltage that can be applied to the AFO units. If the surge voltage is greater than the breakdown voltage of the USG arrester, the choke coil will delay the buildup voltage across the diode (and capacitor) until the arrester flashes, after which the voltage across the arrester drops substantially to zero. For a surge voltage of opposite polarity, the diode is normally conductive and will prevent an excessive voltage rise across the transistors.

ACCESSORY EQUIPMENT

USG-A Lightning Arresters should be used in conjunction with the Surge-Ripple Filter. For characteristics, see Catalog Section RSE-17A1, "USA-G Lightning Arresters.

MOUNTING

If the unit does not include an arrester, it may be mounted in any position. If it includes an arrester, it may be wall or shelf mounted, but should not be mounted upside down on the underside of a shelf. It may be mounted horizontally or vertically, but, if mounted vertically, the open end of the arrester cover should be downwards to prevent accumulation of dust and moisture inside the cover. Refer to Ordering Information for dimensions.

FEATURES

- Available in low or high current rating.
- Equipment design permits checking of all circuit components from terminal posts.
- Solid state components ensure minimum maintenance and long life.
- Easy installation — no adjustment problems.
- Compact space-saving unit.
- Meets AAR requirements — standard AAR terminals.

SURGE-RIPPLE FILTER

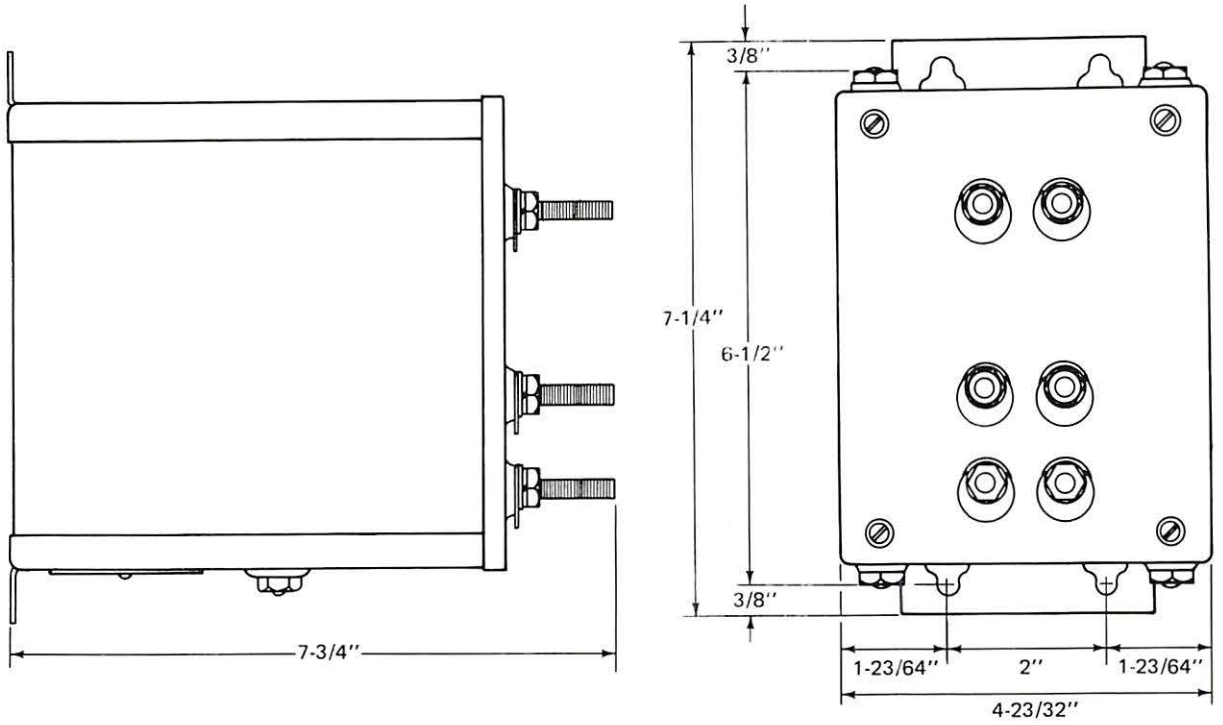

PART NO.	LINE VOLTAGE	MAX. OUTPUT CURRENT (Load)	INPUT-OUTPUT RESISTANCE
N451036-0701	8 to 16 vdc	0.5 Amps.	2.3 Ohms
N451036-0702	8 to 16 vdc	2.5 Amps	0.43 Ohms

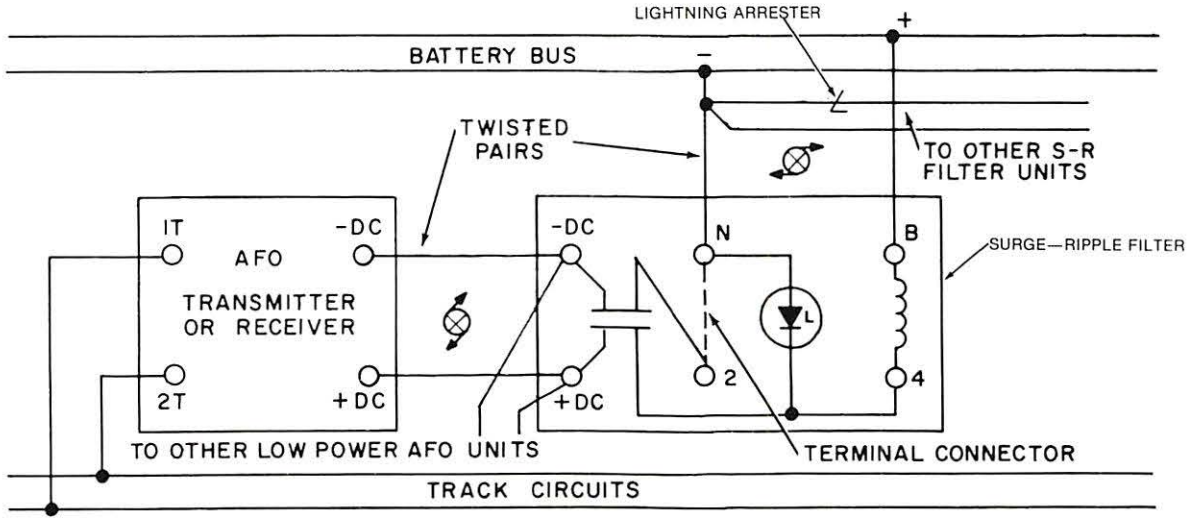

TYPICAL APPLICATION DRAWING

WABCO

An American-Standard Company

AF-200W AUDIO FREQUENCY TRANSIT TRACK CIRCUIT SYSTEM

WABCO's AF-200W is an Audio Frequency Track Circuit System designed primarily for use with Cab Signaling applications. This system is adaptable to both ac and dc propulsion territories, and can provide up to seven separate and distinct cab signal indications or speed commands.

The AF-200W is a solid-state system designed for operation from a 24-volt dc source. The system does not require insulated joints, except at interlockings, and can be installed with just the train detection circuits or with additional Cab Signaling.

UNION SWITCH & SIGNAL DIVISION
WESTINGHOUSE AIR BRAKE COMPANY
Swissvale, PA 15218

PRINTED IN U.S.A.

RSE-8D5
1/77

DESCRIPTION

The AF-200W Audio Frequency Track Circuit System consists of equipment located both in an equipment room and at trackside.

Equipment Room

Here is located a complement of printed circuit boards in a card file designed to fit a standard 19-inch rack. A track coupling unit is attached to the rear panel. These plug-in printed circuit boards with solid-state components provide the utmost in reliability and servicability. All adjustments are made in this equipment room which eliminates exposure of maintainers to trackside dangers.

Trackside Equipment

Trackside equipment consists of minibond transformers mounted between the rails and a junction box mounted alongside the track. Once this equipment is installed, it requires no routine maintenance unless physically damaged.

TRACK CIRCUIT OPERATION

The system utilizes a coded audio frequency transmitter, the signal of which is applied by coupling to the track through the track coupling unit, junction box, and minibond transformer. A track receiver tuned to the associated transmitter frequency energizes a track relay, and if used, associated cab signaling logic.

In a typical system, as illustrated on next page, the track circuits are fed (from north to south) frequencies F6, F5 and F4 from the associated transmitters and minibond transformers. Each transmitter comprises a power amplifier, preamplifier, mixer, and wayside channel amplifier and train detection oscillator which provides the high power carrier frequency for transmission through the track. Additionally the transmitter includes a universal code frequency generator and electronic switch which codes the carrier frequency at a rate which is predetermined or in cab signaling systems at a rate determined by the cab signaling logic. A receiver, tuned to the frequency of its associated transmitter and connected to the track coupling unit of the adjoining unit, energizes the associated track relay during normal conditions.

When a train travels south in the block, track circuit no. 6 receiver de-energizes because track frequency signal F6 is shunted through the train axle. As track circuit no. 6 receiver de-energizes, relay 6T drops out, indicating track occupancy and, in cab signal systems, causing a cab signal to be transmitted from minibond no. 6 to the train. Should the adjacent track circuit no. 5 be occupied, its receiver will be de-energized resulting in no cab signal transmission, thus indicating a stop command. The actual speed command to be transmitted is based upon track relay selection and is not a part of the electronic hardware. A high degree of noise immunity is inherent to the system due to the use of coded signals of appropriate carrier frequencies.

FREQUENCY ASSIGNMENT

The track circuit frequencies used on train detection with the WABCO AF-200W system are chosen for optimum operation and for minimal interference. These frequencies must be used in numerical sequence; i.e., F1, F2, F3, F4, etc. in adjoining track circuits. Refer to Characteristics for assigned frequencies.

OPTIONAL EQUIPMENT

The following optional equipment may be required, or desired, in certain AF-200W system installations.

Track Relay

The WABCO PN-150B, 400 ohm, 6FB track relay is recommended for the AF-200W System.

Minibond

WABCO minibonds, rated at 2000 amps/rail propulsion current, are recommended. The track terminal blocks hold two 500-2000 MCM cables with dc resistance of 0.00002 ohms and continuous unbalance current rating of 200 amps dc. The minibonds are available with or without a protective ramp.

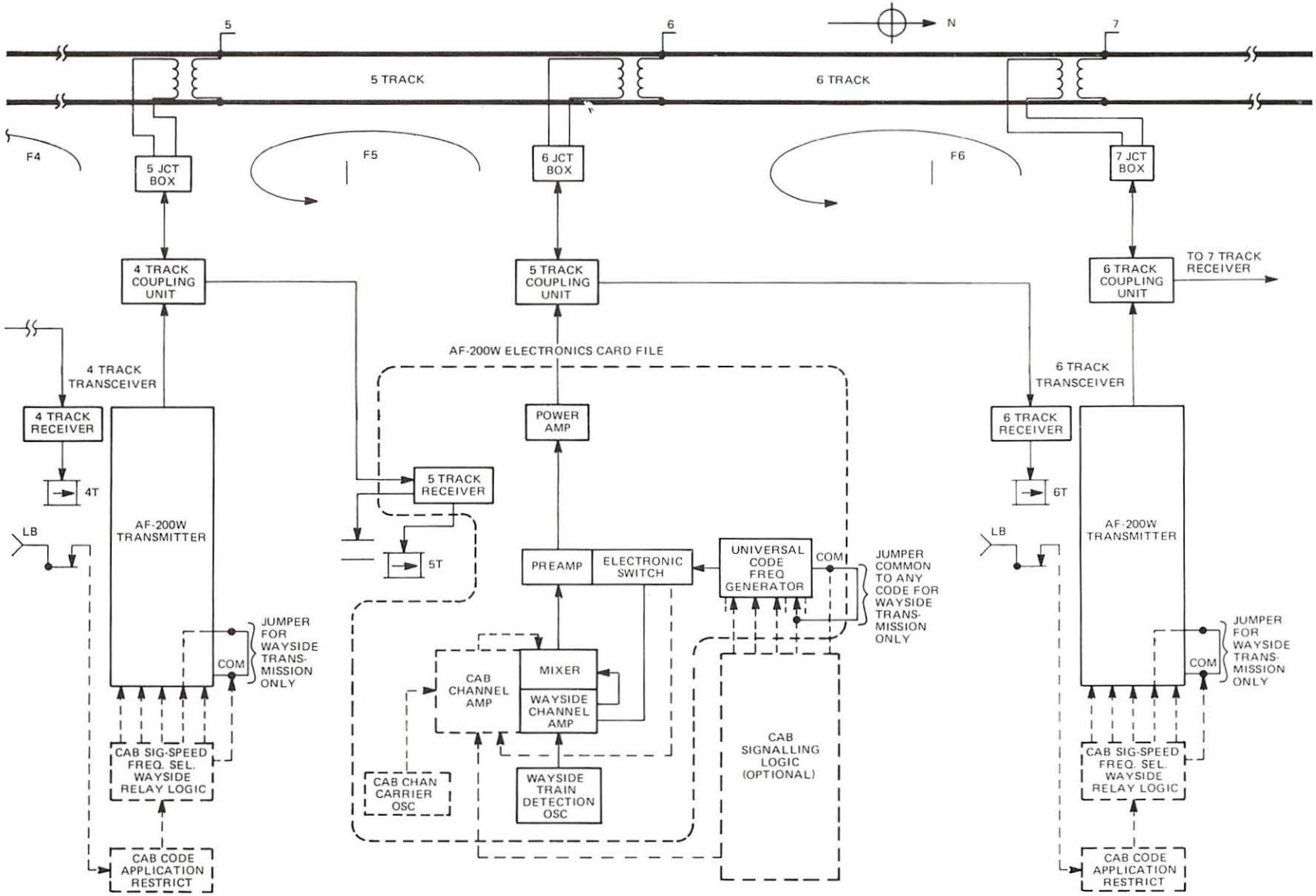

TYPICAL AF-200W INTERFACE BLOCK DIAGRAM

WABCO

CHARACTERISTICS

Detector Track Circuit Frequencies:

F1 — 1590 Hz
F2 — 2670 Hz
F3 — 3870 Hz
F4 — 5190 Hz

Cab Frequency . . . . . 990 Hz

Code Rate (Hz) 20.4, 16.8, 13.6, 10.8, 8.6, 6.6, 5.0

Shunting Sensitivity . . . . . 0.06 ohms

Power Requirements . . . . . 2.7 amps @ 24 vdc

Operating Temperature Range . . . . . -40°F to +160°F (-40°C to +71°C)

FEATURES

- All adjustments are made in equipment room away from trackside dangers.
- High degree of noise immunity.
- Up to 7 code rates or speed commands available.
- All solid-state for long life and minimum downtime.
- Available with Cab Signaling System.

ORDERING INFORMATION

Equipment required depends on the installation and system application, therefore no specific ordering references are applicable. Consult your nearest WABCO representative for additional details and system planning.

NOTE: For installation and maintenance, see Service Manual 6005.

HIGH FREQUENCY TRACK CIRCUIT

US&S's High Frequency Track Circuit equipment is designed to be utilized where short track circuits are required, such as in classification yards. A typical application is to provide switch locking protection without the use of insulated joints.

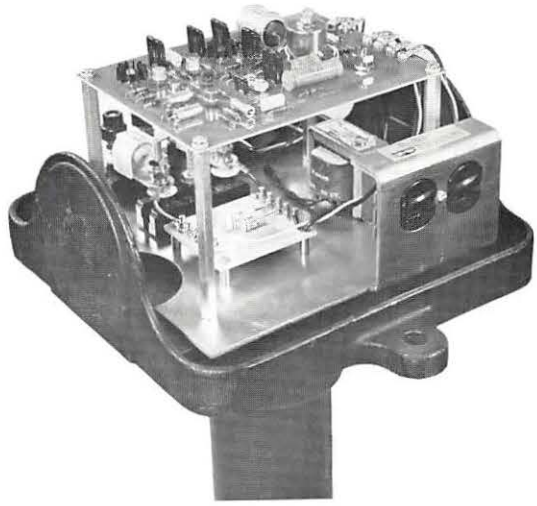

RECEIVER ASSEMBLY

Since track circuits are short, ballast condition is not critical. The circuit is particularly sensitive and, therefore, is useful in areas where a high degree of rail film is experienced.

The equipment, which is fully transistorized and designed to operate from a 117 volt, 60 Hz power source, requires a minimum of maintenance. Four frequencies are available to insure compatibility of adjacent track circuits without interference.

The equipment may be utilized for track lengths of 60 to 300 feet.

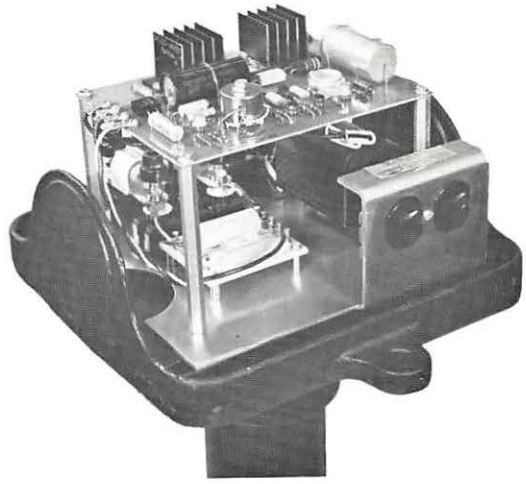

TRANSMITTER ASSEMBLY

DESCRIPTION

The High Frequency Track Circuit consists of a transmitter and receiver connected between two rail-to-rail shunts, which define the limits of the track circuit. Both receiver and transmitter units are housed in weather-proof, pedestal-mounted boxes which are installed near the track. AAR terminal strips in each unit are provided for external connection to the track, supply voltage, track relay and case ground.

Provisions are included in each unit for mounting lightning arresters where required, and units may be ordered with or without lightning arresters.

FEATURES

- Low power requirements.
- High reliability, minimum maintenance.
- Meets AAR requirements.
- No insulated rail joints required.
- Simple installation and adjustment.
- Utilizes printed circuit boards - easy replacement, minimum down-time.

OPERATION

The transmitter applies a pulse modulated signal of an assigned high frequency into the track through two wires connected to the rails 20 feet from a rail-to-rail shunt. Capacitors are connected within the transmitter to tune that section of the track to the assigned transmitter frequency. Similarly, the receiver is connected at the other end of the track 20 feet from a rail-to-rail shunt and that section of the track is capacitively tuned to the transmitted frequency.

The receiver amplifies and detects the transmitted signal and converts it to a dc voltage which holds the external relay energized. When the track is shunted by the train wheels, the signal on the track is reduced below the working level, de-energizing the external relay. In addition, loss of rail-to-rail shunts, failure of input power or loss of transmitter or receiver track connections will result in de-energizing the external relay.

The track circuit may be utilized in series along a section of track and may encompass single switches or LAP switches. Additionally, the track circuit may be used on adjacent parallel tracks without interference.

The track circuit is compatible with US&S's PM-10 Presence Detector provided that the detector "loop" is located between the receiver and transmitter units.

FREQUENCY ASSIGNMENT

There are four frequencies available, 46.5, 57, 71.5, and 89 KHz. Adjacent parallel track installation require differing operating frequencies to avoid interference. In applications where two track circuits are connected in series, lowest and highest frequencies must be used, i.e., 46.5 KHz and 89 KHz.

For operation with US&S's PM-10 Presence Detector, comply with the table below.

TRACK CIRCUIT FREQUENCY	COMPATIBLE US&S PM-10 OPERATING CHANNEL
46.5 KHz	A
57.0 KHz	B
71.5 KHz	C
89.0 KHz	Not Compatible

MOUNTING

The transmitter and receiver units are each housed in a weather-proof, pedestal-mounted junction box. These units are mounted near the rails [maximum 3 feet from nearest rail]. AAR terminal strips are provided and identified for convenience in wiring external connections.

ADDITIONAL EQUIPMENT REQUIRED

In addition to the High Frequency Track Circuit equipment, a track relay with a 400 ohm coil, typically a PN-150B [N322500-901] relay, is required [See Catalog Section RSE-4 for characteristics]. The track relay is external and may be located where convenient, up to several thousand feet away from the receiver.

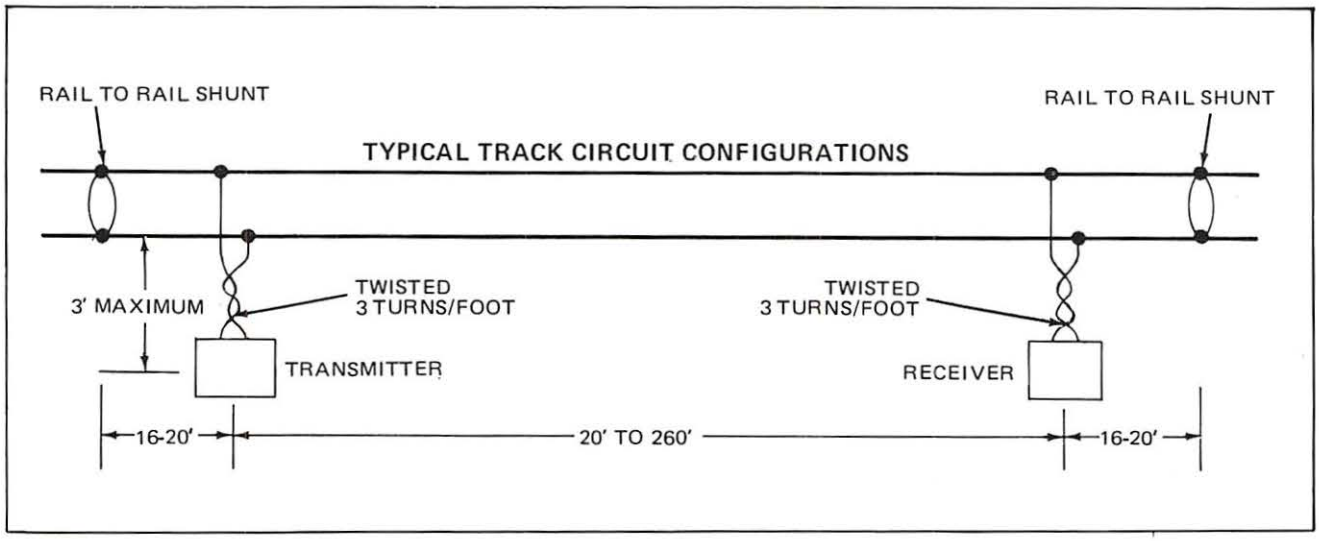

HIGH FREQUENCY TRACK CIRCUIT

TRANSMITTER ASSEMBLY, COMPLETE

FREQ. KHz.	WITH ARRESTER		WITHOUT ARRESTER	
	PART NUMBER WITH PEDESTAL	PART NUMBER WITHOUT PEDESTAL	PART NUMBER WITH PEDESTAL	PART NUMBER WITHOUT PEDESTAL
46.5	X451147-0135	N451147-0103	X451147-0136	N451147-0104
57.0	X451147-0139	N451147-0107	X451147-0140	N451147-0108
71.5	X451147-0143	N451147-0111	X451147-0144	N451147-0112
89.0	X451147-0147	N451147-0115	X451147-0148	N451147-0116

RECEIVER ASSEMBLY, COMPLETE

FREQ. KHz.	WITH ARRESTER		WITHOUT ARRESTER	
	PART NUMBER WITH PEDESTAL	PART NUMBER WITHOUT PEDESTAL	PART NUMBER WITH PEDESTAL	PART NUMBER WITHOUT PEDESTAL
46.5	X451147-0133	N451147-0101	X451147-0134	N451147-0102
57.0	X451147-0137	N451147-0105	X451147-0138	N451147-0106
71.5	X451147-0141	N451147-0109	X451147-0142	N451147-0110
89.0	X451147-0145	N451147-0113	X451147-0146	N451147-0114

NOTE: For complete detail parts and addition information, refer to service manual SM5865.

DIRECTIONAL AREA WARNING DEVICE
AW-10

The AW-10 Directional Area Warning Device is a high frequency track circuit designed to detect the presence of a train by defining an island zone through the use of a bi-directional transmitting and receiving system.

TRANSCEIVER

TRANSPONDER

DESCRIPTION

The AW-10 transceiver consists of two printed circuit boards (transmitter and receiver) mounted in a metal case. Both boards are mounted to the front panel for easy inspection and repair. Input and output terminals mounted on the front panel of the case include local battery, transmitter and receiver rail connections and two relay connections. A fuse holder and a transmitter output voltage adjustment are also located on the front panel. The transceiver is suitable for wall or shelf mounting.

The AW-10 transponder unit has a printed circuit board permanently encapsulated in the plastic pipe with one set of track leads extending from one end. Two transponders are required for each system application.

APPLICATION

The AW-10 is particularly well suited for application in highway crossing warning systems in industrial locations where maximum train speed is within 10 mph, rails are rusted due to light use, and directional detection is desired. The AW-10 has advantages over all other types of track cicuits in this application. As compared to conventional dc or dc-ac (Type "C") track circuits, the AW-10 requires no insulated joints, and has greater sensitivity. As compared to conventional AFO track circuits, no line wires, power drops, or housings are required for the approaches. As compared to Motion Monitors, the AW-10 is less expensive and easier to maintain. In addition, the high frequency provides superior shunting sensivity and good block definition.

FEATURES

- Good block definition (within 10 ft.)
- Block length up to 600 ft.
- Directional detection capability
- Low maintenance — no insulated joints required
- No power drops needed at the approaches
- Transponder suitable for burial, requires no mounting case
- Transceiver is suitable for shelf or wall mounting in weather proof case.
- Low cost compared to installations requiring insulated joints
- Checks track circuit integrity
- Shunting sensitivity up to 0.6 ohm

PRINTED IN USA

UNION SWITCH & SIGNAL DIVISION
AMERICAN STANDARD INC. / SWISSVALE, PA 15218

RSE-8E2
3/83

OPERATION

The AW-10 is designed to provide directional detection with high shunting sensitivity for approach lengths up to 300 feet. The system operates by sending a 24 KHz signal in both directions from the crossing, which powers the transponder located at each approach end. Each transponder sends back rapid bursts of high frequency signals (37.5 KHz and 42 KHz which are detected by their respective receivers at the crossing. When a train passes over a transponder, its power source is shunted away and the receiver at the crossing no longer detects a signal. This causes the relay for that receiver to de-energize. However, the transponder at the opposite approach end continues to send back rapid bursts of high frequency signals which activate its respective receiver and relay. This action provides the means for directional detection. The same operation occurs in reverse when a train approaches the crossing from the opposite direction. Each transponder and receiver circuit overlap at the crossing, which essentially provides the island circuit.

EQUIPMENT CHARACTERISTICS

Power Requirements
8.8 — 16.0 volts dc
1.2 amps max., not shunted
2.0 amps max., shunted

Transmitter Output
5 to 15 volts peak to peak
24 KHz sinusoidal

Temperature Range
−40°C to +70°C
(−40°F to +160°F)

Maximum Approach Length
300 ft. at 3 ohms per 1000 ft. ballast (each direction from crossing)

Overall Dimensions
Transceiver 9-3/16" H x 11" W x 6" D
Transponder 2-3/8" Dia. x 4-1/2" L
(excluding cable)

Additional Hardware
PN-150B biased neutral DC relay, N322500-701, 400 ohm, 5.3 volts
Lightning arresters, N451522-0101, N451522-0201

TYPICAL AW-10 TRACK CIRCUIT APPLICATION

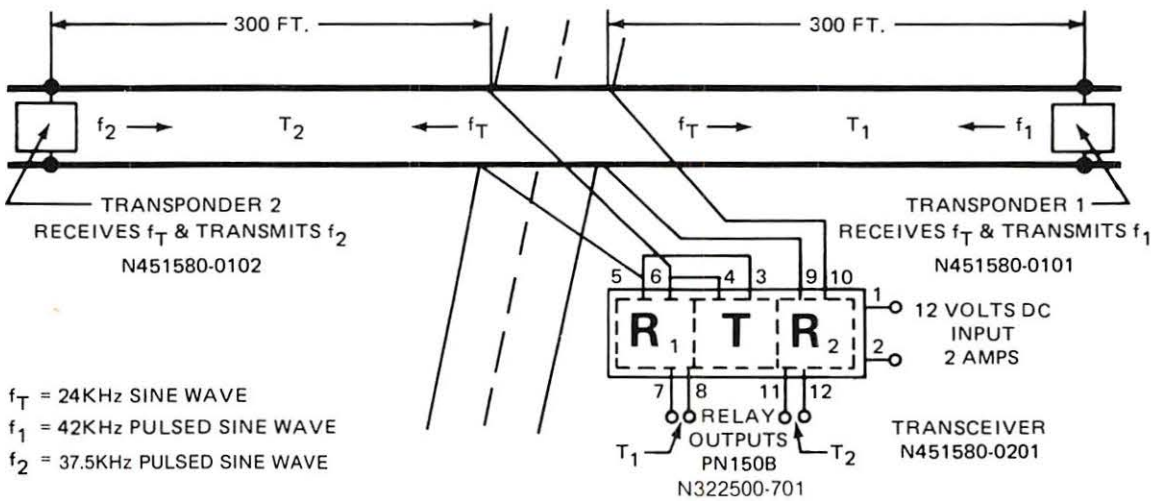

NOTE: For complete detail parts list and additional information, refer to service manual SM6133.

AW-10 TRANSCEIVER

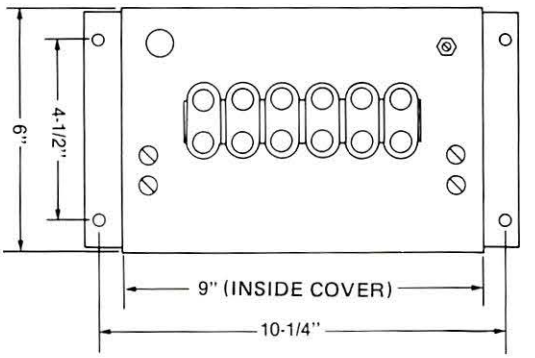

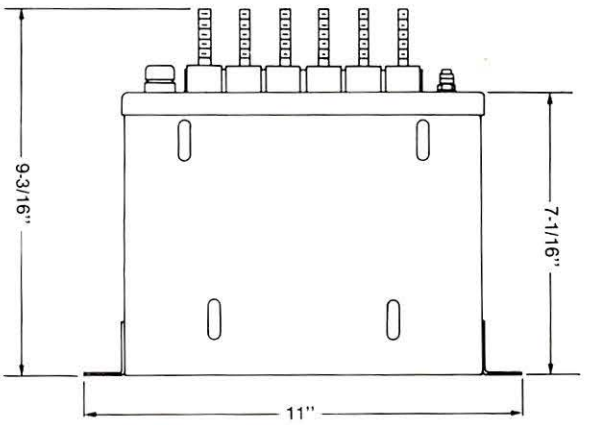

PART NO.	DESCRIPTION
N451580-0201	AW-10 TRANSCEIVER UNIT
J710127	FUSE, 2.5 AMP, FOR TRANSCEIVER

AW-10 TRANSPONDER

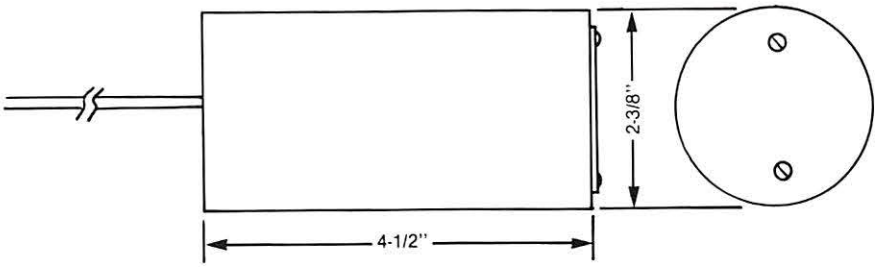

PART NO.	DESCRIPTION
N451580-0102	TRANSPONDER, 42 KHz (one required)
N451580-0101	TRANSPONDER, 37.5 KHz (one required)

ADDITIONAL CIRCUIT EQUIPMENT	
PART NO.	**DESCRIPTION**
N322500-701	PN-150B, BIASED NEUTRAL DC RELAY, 400 ohm, 5.3 volts (two required)
N451552-0101	USG-A ARRESTER, LOW VOLTAGE, without terminal block
X451552-0301	USG-A ARRESTER, LOW VOLTAGE, with terminal block
N451552-0201	USG-A ARRESTER, HIGH VOLTAGE, without terminal block
X451552-0302	USG-A ARRESTER, HIGH VOLTAGE, with terminal block

UNION SWITCH & SIGNAL DIVISION
AMERICAN STANDARD INC. / SWISSVALE, PA 15218

WABCO

FR-HI SHUNT TRACK CIRCUIT

The FR-HI SHUNT track circuit will overcome shunting difficulties due to oily, dirty rail and wheel film when used in short detector track circuits. The unit provides unusually high interrail voltage for quickly breaking through rail film and furnishes protection against momentary loss of shunt. Additional features are low power requirements, simple installation and adjustment, and minimum maintenance. Although particularly applicable to automatic classification yards, the FR-HI SHUNT track circuit may also be used for other short detector track circuit applications where a high degree of shunting sensitivity is required.

WESTINGHOUSE AIR BRAKE COMPANY
UNION SWITCH & SIGNAL DIVISION
Swissvale Post Office, Pittsburgh, Pa. 15218
An American-Standard Company

PRINTED IN U.S.A.

RSE-8F1
2/75

WABCO

DESCRIPTION

The FR-HI SHUNT track unit is housed in a steel metal case (8"h, 4-3/4"w, 9"l) with an insulated top plate equipped with standard AAR terminal posts for all external connections. It includes a ferro-resonant circuit energized directly from the 60 cycle 115 volt line to supply the rail voltage, and a filtered transformer-rectifier combination to supply the track relay current. The circuit consists of a capacitor, a non-linear reactor, and a resistive load. The track circuit load is connected across a secondary winding of the non-linear reactor. Voltage taps are provided on this winding and the winding of the track relay transformer and are used to provide the highest inter-rail voltage which can be maintained under minimum ballast conditions.

OPERATION

During operation, when the interrail voltage, or shunt resistance, increases from zero to a critical value, the voltage across the reactor, and consequently the rail voltage, increases almost proportionally. At the critical resistance, the ferro-resonant circuit suddenly passes into saturation. From this point, the voltage across the reactor, and the inter-rail voltage, will not change appreciably. Consequently, the track relay current and pick up and shunt times remain relatively constant. This process reverses as the shunt resistance is lowered (train wheels and axle act as shunt) and the circuit triggers at practically the same critical resistance. Changes in the line voltage do not affect the rail voltage.

The FR-HI SHUNT track circuit is particularly applicable for short detector track circuits where the total ballast resistance is at least 8 ohms. The degree of defective insulated rail joint detection of the FR-HI SHUNT track circuit is similar to that of other types of AC or AC/DC track circuits. When properly adjusted, the unit will shunt through any oily, dirty or rusty film normally encountered.

MOUNTING

A convenient mounting bracket which is part of the case, facilitates wall mounting, or the unit can be installed on a shelf. Handy terminals with voltage markings facilitate electrical connections to the unit.

FEATURES

- Low power requirements.
- Simple installation and adjustment.
- Minimum maintenance.
- Meets AAR requirements.
- Oily, dirty rails no problem.
- Reliable components.

FR-HI SHUNT TRACK CIRCUIT

ORDERING INFORMATION

In determining your requirements, refer to the diagram and order from the tabulation below. In addition to the FR-HI SHUNT track unit, a track relay (plug-in or shelf type), relay mounting base or shock absorber, an adjustable resistor, and relay conversion parts will be required.

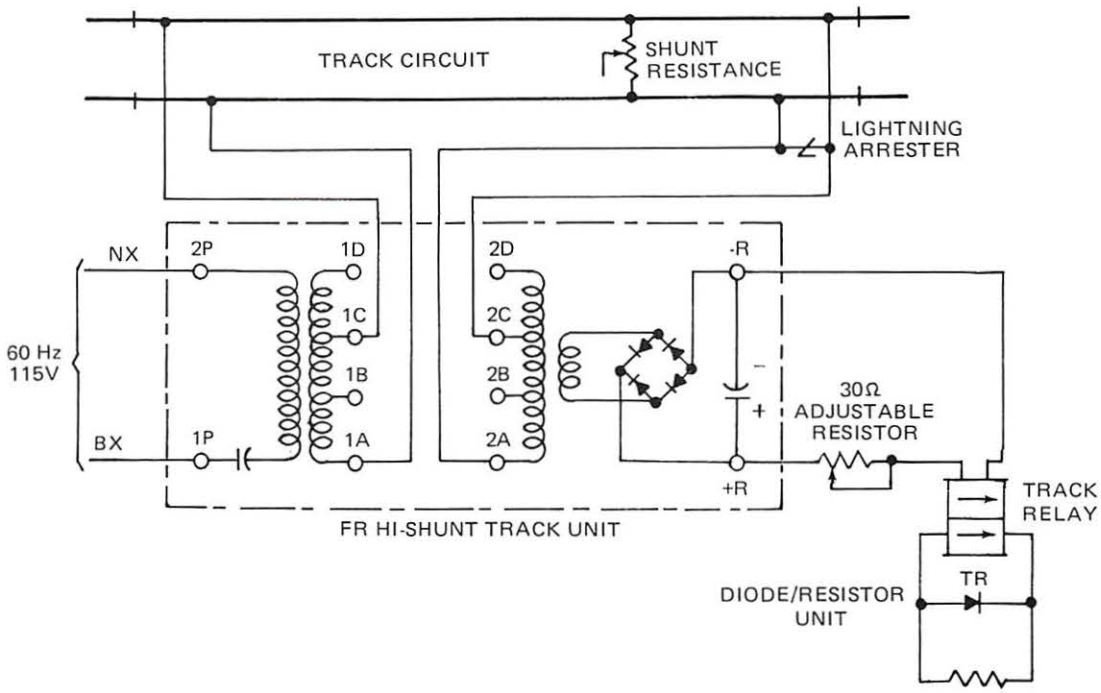

Order by Part No. & Description Shown in Caps

PART NO.	DESCRIPTION
N375927	FR-HI SHUNT TRACK UNIT
N156685	RESISTOR, ADJUSTABLE, 30 OHM
N322501-703	RELAY, TRACK, PN-150BQS, 11/25 ohm, 6 point
N334266	MOUNTING BASE, PN-150BQS Track Relay
*N378310	DIODE RESISTOR UNIT

*For converting PN-150BQS Track Relays for use on FR-HI SHUNT Track Circuits.

SRD-5 SELF—RESTORING DRAGGING EQUIPMENT DETECTOR

The SRD-5 Self-Restoring Dragging Equipment Detector is a compact, integral device designed to mount directly on standard length ties. (No tie framing is needed.) The detector is arranged to operate with traffic in either direction and provides continues automatic operation without the need for replacing the detecting element after each operation.

The SRD-5 can be used at approaching interlockings, tunnels, bridges, or other locations to detect any defective equipment that might possibly be hanging beneath cars or locomotives that could cause damage or derailment. Another application is at car inspection pits in classification yards, where it is used to warn inspectors of such defects on appoaching cars.

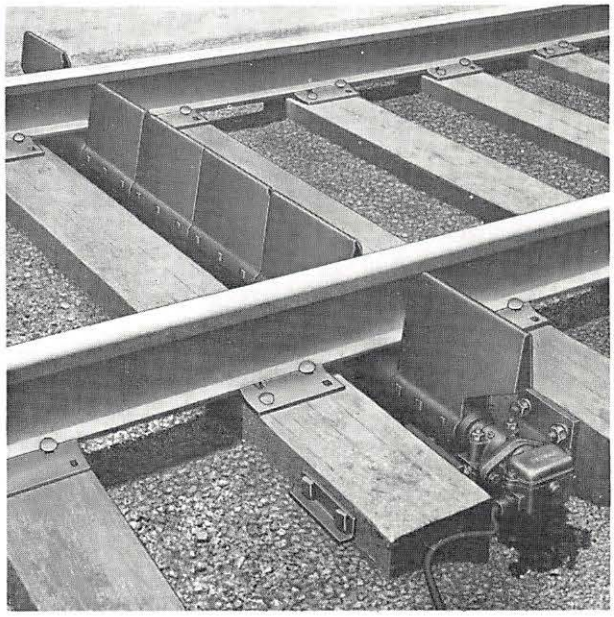

DESCRIPTION

Dragging equipment is detected by means of V-shaped plates mounted vertically between the rails and outside the rails for a sufficient distance to cover maximum car truck width. When struck by dragging equipment, the plates are deflected (i.e., rotated) in either direction and resultant rotation of the shaft operates the circuit controller contact to set wayside signals to warn enginemen. A spring-type restoring mechanism automatically returns both the detector plates and the circuit controller contact to their normal positions immediately after each operation, thus placing the detector in condition to check the next train. The torque characteristics of the detector can be readily adjusted to suit requirements of the particular installation.

The detector is ruggedly constructed to withstand the severe conditions of shock and vibration encountered in service. All operating parts are protected by weatherproof housings. Resilient mountings for the bearings are utilized to minimize shock caused by passing trains. Maintenance is simplified since no adjustments are normally required, and the refilling of two grease fittings is the only attention necessary.

Since only the plates of the SRD-5 Dragging Equipment Detector project above the top of the ties, it is necessary to remove only the plates and to protect the cable to clear ballast cleaning equipment.

The circuit controller comprises one heavy-duty silver-to-silver normally closed contact enclosed in a rugged housing which bolts directly to one of the bearing blocks. The circuit controller shaft is carried on substantial Oilite bushings, which simplifies lubrication. A waterproof cable fitting and a two conductor #14 flexible cable approximately 6 feet long are furnished for making circuit connections. Provision is made for applying the cable fitting to either side of the controller housing to suit installation requirements. A gasketed cover provides ready access to the circuit controller compartment for inspecting the contact assembly and circuit connections.

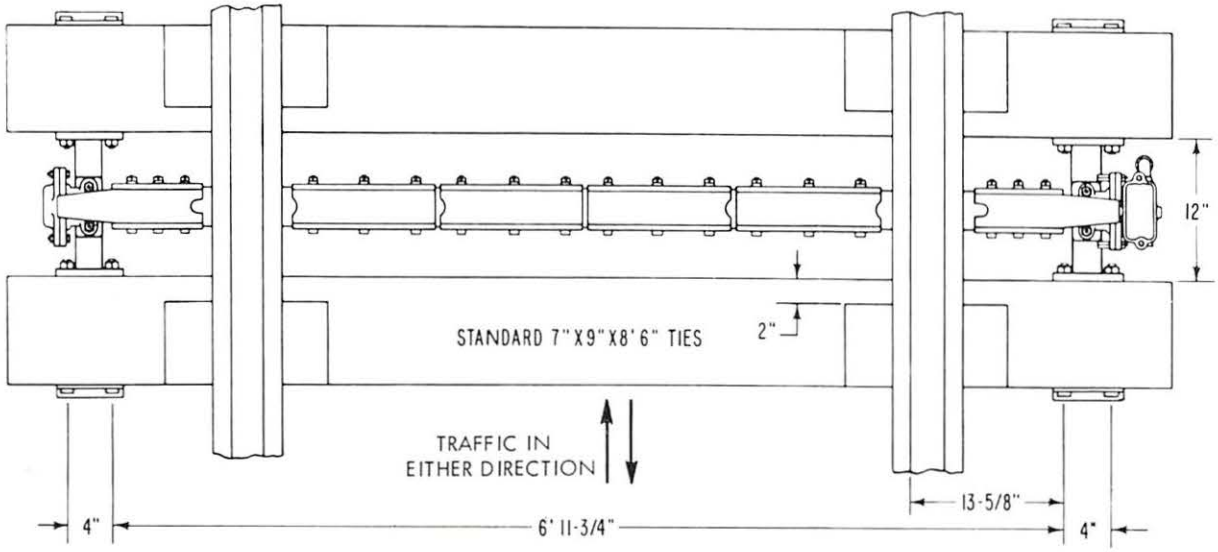

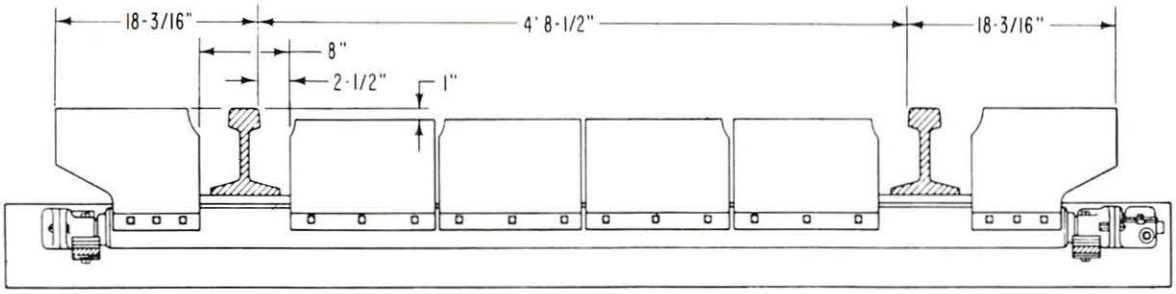

VIEW W - STANDARD FOR MAIN LINE USE

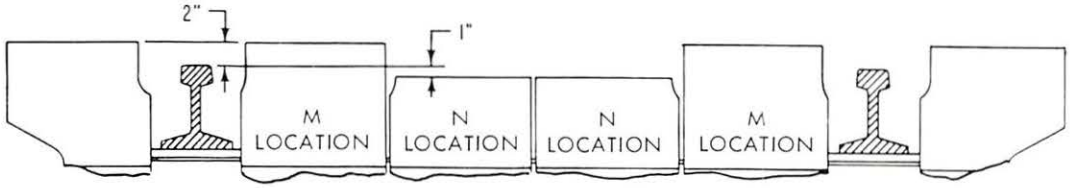

VIEW X - STANDARD FOR CLASSIFICATION YARDS

PART NO.	DESCRIPTION
0289704	SRD-5 SELF-RESTORING DRAGGING EQUIPMENT DETECTOR COMPLETE. Does not include mounting hardware. Orders should specify rail size and thickness of tie plate.

NOTE: For detail parts and additional information, refer to service manuals SM5485 and SM5485-A.

WD-30 AND WD-30D WHEEL DETECTORS

US&S offers both directional and non-directional wheel detectors to provide one- or two-way wheel detection wherever wheel count data is required. The WD-30 Wheel Detector provides non-directional (one-way) wheel detection while the WD-30D Wheel Detector provides directional (two-way) wheel detection. Both wheel detectors are accurate to train speeds up to 100 mph and can be mounted on any standard rail from 90# to 155#.

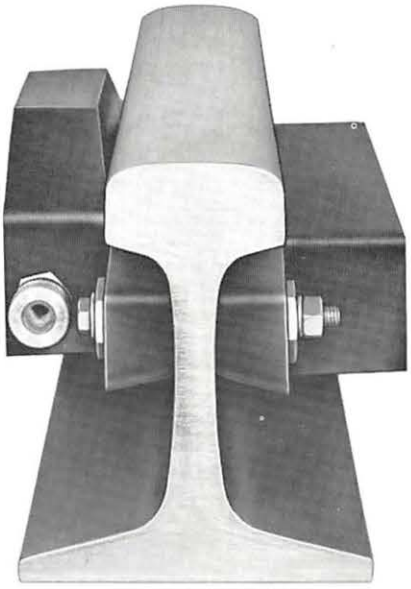

DESCRIPTION

US&S wheel detectors consist of two molded sections (transmitter and receiver) which are bolted directly to the web of the rail. The transmitter section contains a coil and junction box which encloses the electrical connections. The receiver section contains a single coil for the non-directional WD-30 Wheel Detector and two coils for the directional WD-30D Wheel Detector. External electrical connections are made through a cable entrance connector on the side of the wheel detector.

OPERATION

Car wheels which pass over the receiver section of the wheel detector cause a signal to be produced. This signal is supplied to the transmitter section which generates the actual output of the wheel detector. The directional WD-30D Wheel Detector also supplies a signal to indicate the direction in which the train is traveling.

PHYSICAL ARRANGEMENT

Overall and mounting dimensions of the WD-30 and WD-30D Wheel Detectors are given in the diagrams on page 2. The dimensions will be found useful in planning an installation.

2701

U451062-1301

PART NO.	DESCRIPTION
X451062-1903	WD-30 NON-DIRECTIONAL WHEEL DETECTOR
X451062-1902	WD-30D DIRECTIONAL WHEEL DETECTOR

PRINTED IN USA

UNION SWITCH & SIGNAL DIVISION
AMERICAN STANDARD INC. / SWISSVALE, PA 15218

RSE-8H1
REV. 10/72

MOUNTING AND DIMENSION DIAGRAM

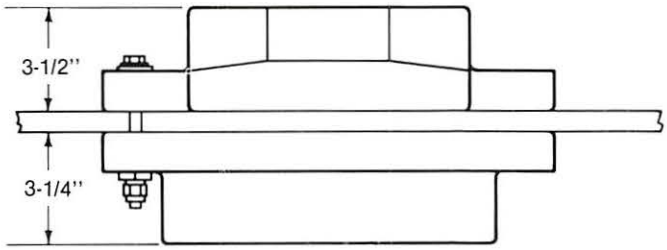

TOP VIEW

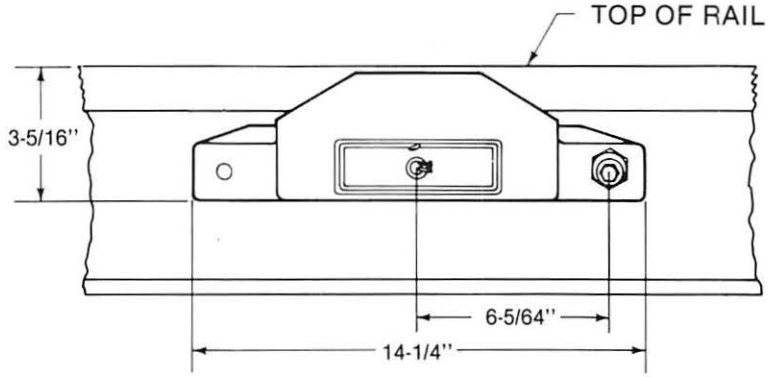

SIDE VIEW

INTERFACE BOARDS

A full range of interface boards are available which processes the output of the wheel detector for use in a computer. A list of these boards is contained in the tabulation below.

Interface Board Part No.	Signal Output		Used With
	Wheel	No Wheel	
N451054-5401	+5 vdc	0 vdc	WD-30
N451054-5501	+6 vdc pulse	0 vdc	WD-30D
N451054-5502	0 vdc	+5 vdc pulse	WD-30
N451054-9701	0 vdc	+5 vdc	WD-30
N451054-7901	0 or −6 vdc	−11 or 0 vdc	WD-30

ACCUTECT WHEEL DETECTOR

The US&S Accutect Wheel Detector provides wheel count data in gravity type, computer controlled classification yards and other similar applications. Accutect is a rugged, compact unit that will provide years of maintenance free service.

DESCRIPTION

The complete equipment complement includes the Accutect detector head, interfacing printed circuit boards, and interconnecting cable. The detector head consists of a one-piece molded urethane block containing a magnet, one Hall-Effect sensor, and the electronic PCB. No field electronics are required between the detector head and office PCB and the two can be located 5000 feet apart (see application diagrams on back page). While not necessary, a field junction box may be desirable for cable termination. Accutect is temperature compensated and when operating over the temperature range of −40°C to +70°C, no calibration adjustments of the office PCB are required after initial installation.

OPERATION

The detector head, which is either clamped to the base or bolted to the web of the rail, operates from the magnetic disturbance caused by the wheel flange. The wheel detector is designed to remain quiescent with a zero volt output until it detects a wheel. As the wheel passes over the head, the output changes to a high level ac voltage. The output signal is then transmitted to the office PCB via cabling. The office PCB conditions the signal for acceptance by central equipment. Detection accuracy is independent of wheel diameters.

FEATURES

- High accuracy
- Easy to install - long service life
- Temperature compensated (−40°to +70°C range)
- Direct replacement for US&S's WD-30
- No additional field electronics required
- Detection accuracy independent of wheel diameter

UNION SWITCH & SIGNAL DIVISION
AMERICAN STANDARD INC. / SWISSVALE, PA 15218

RSE-8H2
9/84

PRINTED IN U.S.A.

INSTALLATION/APPLICATIONS

Two installation methods are available. The detector head can be installed by using the rail clamp mounting version or by securing directly to the rail by drilling through the rail web and using the WD-30 retrofit version. The use of the rail clamp mounting bracket eliminates all drilling. Connection of the field cable to the detector head is made via a single water/oil tight connection.

If a unit fails or becomes damaged, replacement of the head from the clamp assembly can be accomplished quickly without removing the rail clamp. Two bolts hold the detector head to the rail clamp and all wiring is in the single cable connector.

Accutect can also be used to replace Union Switch & Signal's WD-30 wheel detector. This requires no changes in the office electronics, and the electronics in the field junction box is replaced by an ac/dc interface PCB. If desired, the rail holes for mounting the WD-30 can be used for mounting the Accutect detector head.

Unlike the WD-30 wheel detector, Accutect is not available in a double head version for detecting direction. However, Accutect detectors may be applied together to provide directional detection.

SPECIFICATIONS

Input Voltage: 24 volts dc (nominal)

Output Voltage: Low Level - 0 volts
High Level - 7KHz,
10 volt peak-to-peak sinewave

Breakdown Rating: 3000 volts between detector electronics and rail

Detector Head:

Height: 2-3/4 inches
4-1/4 inches to bolt ends

Width: 5-1/4 inches

Length: 7 inches

Weight: 7-1/2 lbs.
10-1/2 lbs.

Rail Size (By the adjustable clamp)

112# R.E. to 140# R.E.

46 kg/m

Mounting Arrangements:

—Clamp on rail base, no drilling, requires 7" of rail length.

—Drill through rail web; identical WD-30 hole spacing (14" of rail length).

—Mounting over ties or concrete requires 14" of rail length. (Drill through rail web.)

Cable Assembly:

— 4 conductor, #16 A.W.G., shielded with plug connector to detector head (variable lengths available for wiring train detector head to junction box, or in-line splice).

— Twisted pair, #14 A.W.G, shielded for wiring from field to office (5,000 feet max.)

Power Required at Detector Head:

18-32 volts dc. Ac/dc PCB available for field junction box or case installation to convert 22-36 volts ac to 24 volts dc.

Office PCB same as WD-30.

ORDERING INFORMATION

ACCUTECT WHEEL DETECTOR

RAIL CLAMP MOUNTING ASSEMBLY WITH HEAD

PART NO.	DESCRIPTION
X451062-5001	For 112RE-140RE rails
X451062-5101	For 46KG/m rail

RAIL BOLT MOUNTING ASS'Y w/HEAD

PART NO. X451062-5301

WHEEL DETECTOR HEAD

PART NO. N451062-4901

PRINTED CIRCUIT BOARDS - PART NO. PREFIX N451605-

SUFFIX NO.	DESCRIPTION	SUFFIX NO.	DESCRIPTION
-7201	AC/DC INTERFACE PCB	-9701	LOGIC INTERFACE PCB
-5401	LOGIC INTERFACE PCB	-9702	LOGIC INTERFACE PCB
-7901	LOGIC INTERFACE PCB		

CABLE ASSEMBLY, 4 CONDUCTOR, #16 A.W.G., SHIELDED

PART NO.	CABLE LENGTH
N451458-4801	6 ft.
N451458-4803	10 ft.
N451458-4805	15 ft.
N451458-4807	25 ft.
N451458-4912	50 ft.
N451458-4813	75 ft.
N451458-4814	100 ft.

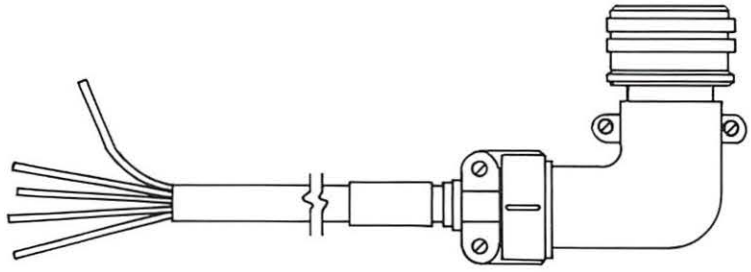

ACCUTECT WHEEL DETECTOR

APPLICATION DRAWINGS

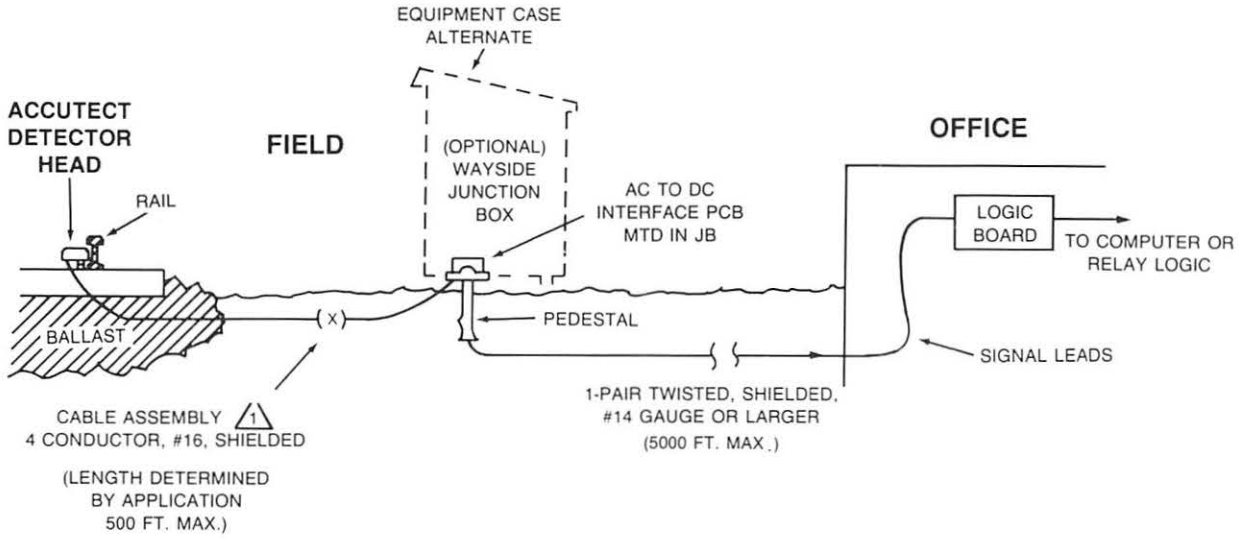

WAYSIDE CASE OR JUNCTION BOX WITH AC/DC PCB

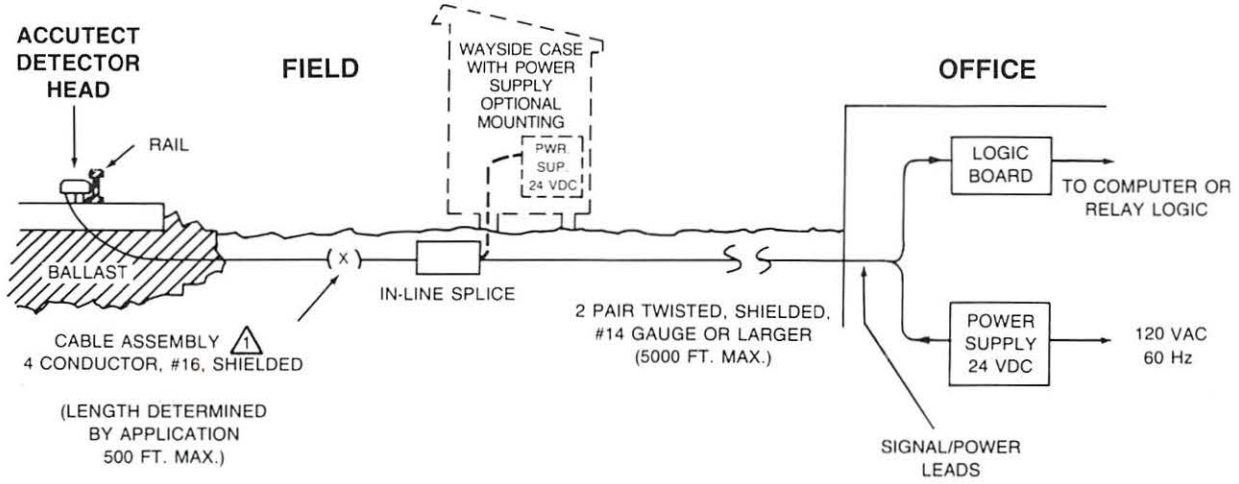

DIRECT CONNECTION INSTALLATION

1 INCLUDES PLUG CONNECTOR FOR DIRECT CONNECTION TO DETECTOR HEAD

MM-25 MOTION MONITOR

The MM-25 Motion Monitor is designed to provide train motion detection for highway crossing systems without the need for insulated rail joints.

The MM-25 offers a significant advantage in providing stop/restart operation for grade crossing approach track circuits with all equipment located at the crossing.

DESCRIPTION

The MM-25 unit is a completely self-contained transmitter/receiver unit housed in a sheet steel case designed for wall, rack, or shelf mounting. The front panel incorporates standard AAR terminals for convenient connection of power and track circuit leads.

The unit, which is fully transistorized and designed to operate from a nominal 12 vdc power source, incorporates self-check circuitry to monitor the operating status of the detection circuitry and to de-energize the output relay if this is not intact. The MM-25 also has a high-level detector to indicate the presence of track fault conditions.

Convenient front panel locking potentiometers are provided for adjustment of timing circuitry and island circuit sensitivity during initial installation.

OPERATION

The MM-25 applies constant current to the impedance presented by the track. The receiver portion of the unit has a sharply tuned detector circuit that monitors the voltage across the rail impedance.

As the train approaches, the effective impedance presented by the track is gradually reduced. This changing impedance causes the voltage to change at the receiver's input. When the voltage rate of change is above the sensitivity threshold level, the equipment will sense the train presence and de-energize the motion monitor relay. The de-energization of the motion monitor relay enables the timing circuit. The relay will not re-energize until the elapsed time equals the time as set by the timing potentiometer and the train has stopped approaching the crossing.

FEATURES

- Reliable solid-state design, offers a completely self-contained, rugged unit easily mounted on walls, racks, or shelves.
- Standard AAR terminals provided for interconnection. Meets all applicable AAR requirements.
- Less external adjustments — minimizes installation time.
- Adaptable to existing track circuits for approach distances of up to 2500 feet at 3 ohm ballast (dc).
- LED's provide a visual indication of the operation of the island self check and track fault circuitry.
- Separate island circuit relay can be used.
- Built-in surge protection. Requires only external standard lightning arresters for positive protection.
- Adjustable vital timing circuit provides 6-36 sec. delay. This starts after initial detection and is adjustable to meet application needs.
- Incorporates a high-level detector to indicate the presence of track fault conditions.

The voltage stops changing if the train stops within the approach distance of the crossing.

The motion monitor relay is then energized provided the train has stopped outside the island circuit. The motion monitor relay remains de-energized if the train is stopped within the island circuit.

The high-level detector monitors track voltage amplitude and is adjusted to be slightly above the highest voltage seen under normal operating conditions (infinite ballast and no track faults). If a series impedance appears in the track circuit, it will trip the high-level detector. This drops the MM relay and turns on a track fault indicator LED on the MM-25 front panel. This LED will stay on until it is manually reset, regardless of track conditions, in case the track fault is intermittent. A momentary pushbutton switch, mounted on the MM-25 front panel, tests the high-level detector circuitry when pressed and resets the track fault LED when released.

When the train starts again the voltage rate of change will be detected and the motion monitor relay will de-energize, re-initiating crossing warning.

If desired, the equipment may be used with standard highway crossing and area warning track circuits.

FREQUENCY ASSIGNMENT

The MM-25 equipment is available in six operating frequencies: 207, 230, 390, 405, 570, and 630 Hertz. Different frequencies can be used where multiple crossing applications are to be signalled.

ADDITIONAL EQUIPMENT AVAILABLE

In addition to the MM-25 Motion Monitor equipment, a surge-ripple filter, lightning arrester, terminating tuned shunts, and relay may be required. Refer to Ordering Information for references to meet application requirements.

TYPICAL HIGHWAY CROSSING APPLICATION

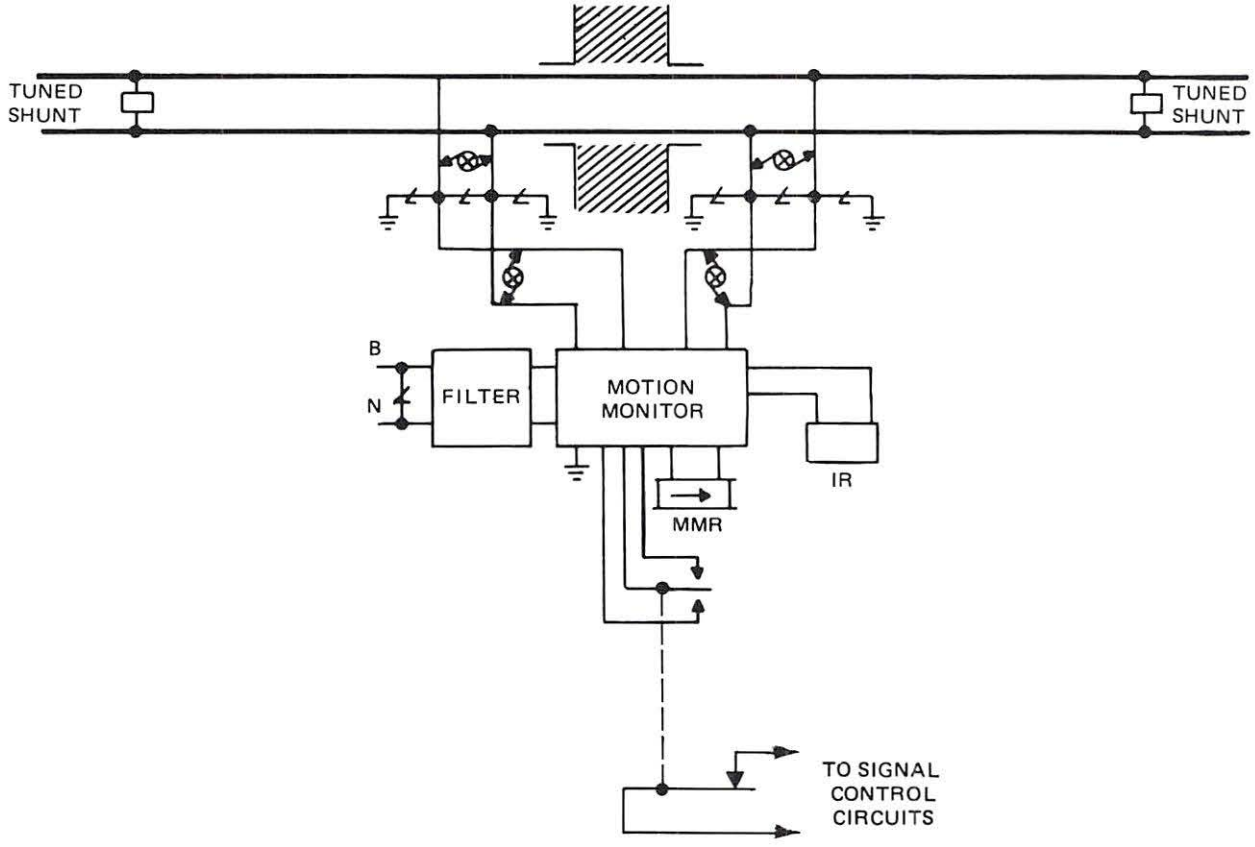

MM-25 MOTION MONITOR

Determine your frequency requirements and order from the tabulation below, specifying part number for frequency desired. Order additional items to complete track circuit from back page.

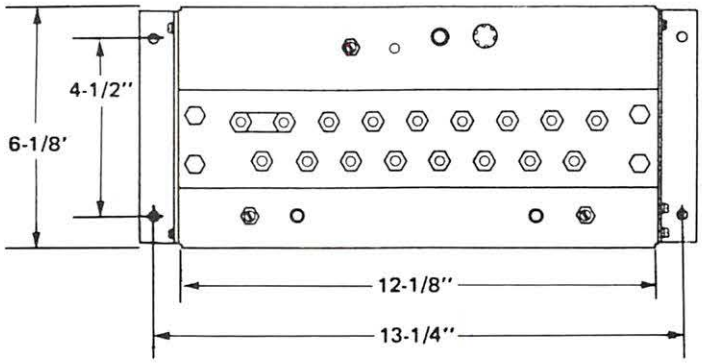

WEIGHT: 17 lbs.

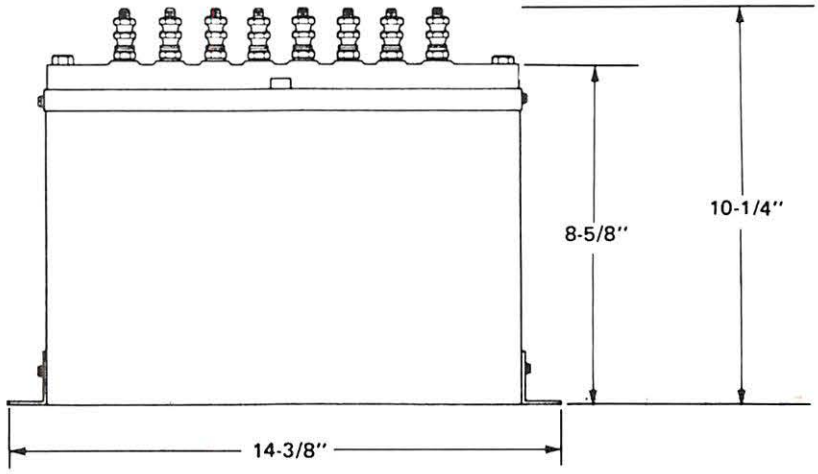

OPERATING FREQUENCY (HERTZ)	PART NO.	MAXIMUM DISTANCE (FT.)		
		10 OHMS/ 1000 FT. BALLAST	5 OHMS/ 1000 FT. BALLAST	3 OHMS/ 1000 FT. BALLAST
207	N451554-0107	4865	3440	2665
230	N451554-0108	4615	3265	2530
390	N451554-0109	3545	2500	1940
405	N451554-0110	3480	2460	1900
570	N451554-0111	2930	2075	1600
630	N451554-0112	2790	1975	1530

NOTE: For complete detail parts list and additional information, refer to service manual SM6252.

MM-25 SPECIFICATIONS

DC Input ..... 9.5 to 16.2 vdc
(0.5 vp-p Maximum Ripple*)

Current Drain 207 & 230 Hz = 1.9 Amps (nominal)
390 & 405 Hz = 1.4 Amps (nominal)
570 & 630 Hz = 1.2 Amps (nominal)

Rail Current ..... 207 & 230 Hz = 1.0 Amp
390 & 405 Hz = 0.5 Amp
570 & 630 Hz = 0.33 Amp

Frequency (± 1%)

Motion Monitor	Island
207 & 230 Hz	12.28kHz
390 & 405 Hz	15.00kHz
570 & 630 Hz	20.00kHz

Modulation Frequency ..... 52Hz ± 5Hz

Output Loads ..... Vital Relays
Motion Monitor Relays ..... 400 ohms (PN-150BH)
Island Relays (Optional) ..... 400 ohms (PN-150BH)
(PN-150B)

Temperature Range ..... -40°F to + 160°F
(-40°C to + 70°C)

Track Lead Resistance
Transmitter ..... No more than 0.15 ohms total
Receiver ..... No more than 0.5 ohms total

*If this value is greater than 0.5 vp-p, a surge ripple filter must be used.

ADDITIONAL EQUIPMENT

ORDERING INFORMATION

The following additional equipment, used in conjunction with the MM-25 installation, is available from Union Switch & Signal.

PART NO.	DESCRIPTION
N322511-007	RELAY, PN-150BH, 400 ohms, (MMR)
N451376-0302	MOUNTING BASE, for PN-150BH Relay
N322500-901	RELAY, PN-150B, 400 ohms, (IR)
N451376-0302	MOUNTING BASE, for PN-150B Relay
N451096-0702	SURGE-RIPPLE FILTER, 2.5 amperes
N451552-0101	USG-A SHUNT ARRESTER, without terminal block (connect across track leads)
X451552-0301	USG-A SHUNT ARRESTER, with terminal block (connect across track leads)
N-451039-	TERMINATING SHUNTS
2401	207 Hz
2402	230 Hz
2403	390 Hz
2404	405 Hz
2405	570 Hz
2406	630 Hz
N451552-0302	USG-A SERIES ARRESTER, without terminal block (connect track lead to ground)
X451552-0201	USG-A SERIES ARRESTER, with terminal block (connect track lead to ground)

WABCO

PM-10 PRESENCE MONITOR

The PM-10 Presence Monitor is designed to provide reliable car detection over short sections of track. The equipment, which is fully transistorized, is available for operation from 12 or 14 volts dc, or from 24 volts dc with an external voltage regulator. A unique automatic frequency control minimizes the need for routine readjustment due to seasonal or environmental changes, and three operating frequencies insure compatibility in adjoining track circuit installation.

Among the many applications for which the equipment is ideally suited are electric switch locking, switch lock release and track occupancy indication.

DESCRIPTION

The completely self-contained equipment consists of three printed circuit boards and associated components housed in a space-saving sheet steel enclosure with integral mounting bracket. The front panel incorporates all test/tuning adjustments and is equipped with a front panel test meter to aid in servicing. All electrical connections to the equipment are made via a nine conductor color-coded cable which exits through a slot and rubber grommet on the side of the housing.

The Presence Monitor is not weatherproof and should not be exposed to the elements. If located out-of-doors, a weatherproof housing is required.

TRACK CIRCUIT OPERATION

The equipment detects cars by recognizing oscillator frequency shift caused by the electromagnetic coupling between a car and a track-mounted external loop which serves as a portion of the frequency-determining network of a loop oscillator. The loop oscillator selected channel frequency is fed to a mixer where it is hetrodyned with a reference oscillator frequency. The reference oscillator frequency is periodically corrected by a unique digital automatic frequency control circuit to maintain the mixer intermediate frequency control output at 9900 Hz nominal when no car is present near the track loop. The automatic frequency control circuit provides for continuous readjustment of the reference oscillator frequency to compensate for long-term changes in loop oscillator frequency due to physical changes in the track loop environment. The mixer intermediate frequency output is routed through a narrow band-pass filter, amplified by tuned amplifiers, and rectified to energize a self-contained, plug-in relay or optional external vital relay.

When the car comes in close proximity to the track loop, the loop oscillator frequency changes abruptly, the automatic frequency control deactivates, and, consequently, the mixer intermediate frequency output changes. Due to the band-pass filter and tuned intermediate frequency amplifier, the resultant output of the rectifier is attenuated causing the plug-in relay to de-energize.

Front panel switches and test/tune meter are provided for initial tuning and adjustment, and eliminate the need for external test equipment. An internal Zener diode voltage regulator and a surge protection circuit are incorporated in all units, except the 24 volt unit designed for use with an external voltage regulator.

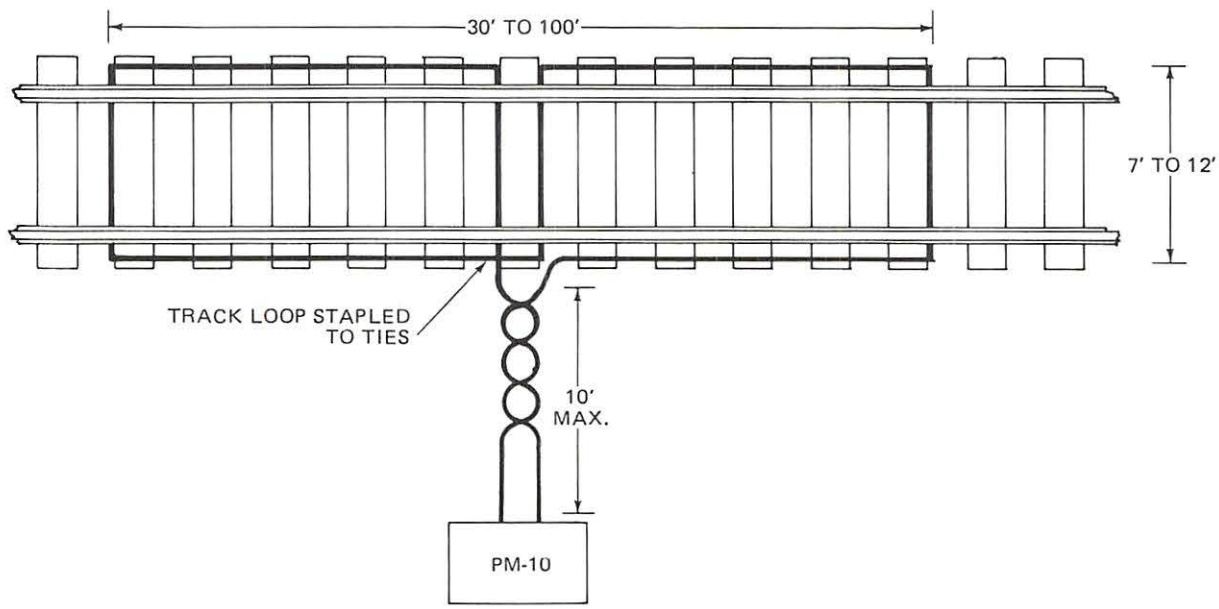

TRACK CIRCUIT INSTALLATION

MOUNTING

The equipment is designed for shelf mounting with its face uppermost and horizontal when utilizing the internal plug-in relay. When using an external relay the equipment may be mounted in any position convenient to monitoring the front panel controls. Refer to Ordering Information for mounting dimensions.

OPTIONAL EQUIPMENT

The following optional equipment is available for use with the Presence Monitor.

External Relay

An external relay may be desired on certain installations. In these cases, the internal relay should be removed. The external relay must have a coil resistance of not less than 500 ohms, a pick-up voltage of 8-10 volts dc, and a drop away voltage approximately 40 to 60% of the pick-up voltage.

Voltage Regulator

An external dc voltage regulator is required in installations where the power source voltage exceeds 13.5 vdc for the 12 vdc unit (suffix 0201) or exceeds 17.5 vdc for the 14 vdc unit (suffix 0203) and in all installations where operation from a +24 vdc power source is desired (suffix 0202).

Weatherproof Case

The PM-10 is available pre-mounted in a pedestal type weatherproof case. See ordering references for information.

FEATURES

- Completely solid state — high reliability.
- Built-in test/tuning meter — enhances serviceability.
- Unique automatic frequency control — automatic compensation for environmental changes.
- Three channels of operation — compatibility in adjoining track installation assured.
- Printed circuit boards — easy replacement, minimum downtime.
- No rail connections required.
- Available for operation from 12 or 14 volts dc and for 24 volt dc operation with an external regulator.
- Available with or without the weatherproof pedestal mounting base.

NOTE: For additional information, specifications, and application data, see Service Manual 5961.

SPECIFICATIONS

Input Voltage . . . . . 12, 14 or 24 vdc (See ordering references)

Input Current . . . . . 250 ma at 12 vdc

Output . . . .One transfer contact rated at 500 vac or vdc max and 5 amps max, 250 VA max

Optional Output . . . . . An output is also provided to operate an external 1000 ohm relay if desired

Temperature Range. . . . . -40 to +140°F (-40 to +60°C)

Operating Frequency Range (Loop). . . . . 70 to 100 KHz

Number of Channels 3

Max Loop Resistance . . . . . 0.2 ohm

Overall Loop Dimension . . . . . Length - 30 to 100 ft., Width - 7 to 12 ft. (8'6" standard)

Housing. . . . . .Outdoor weatherproof housing required

PM-10 PRESENCE MONITOR

ORDERING INFORMATION

Order by part number and description shown in caps. Specify operating voltage.

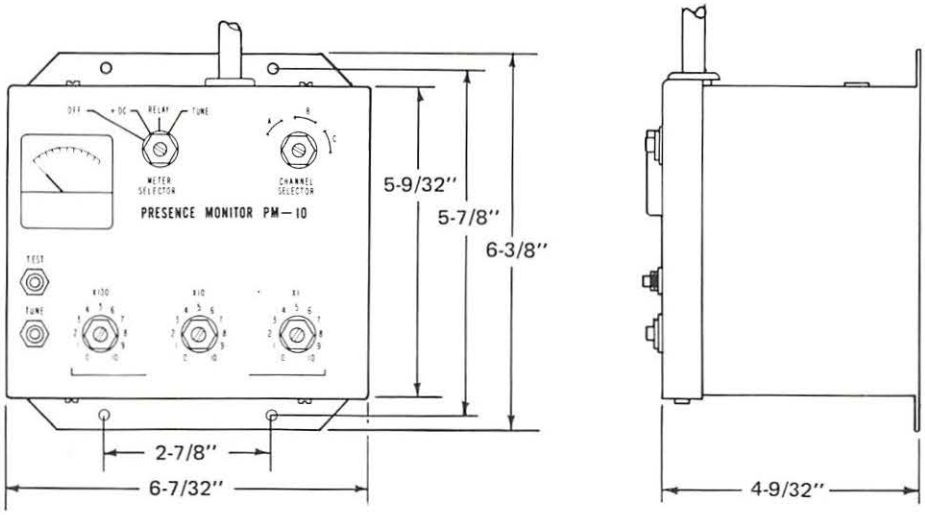

WEIGHT:
4-2/3 LBS

PM-10 PRESENCE MONITOR UNIT

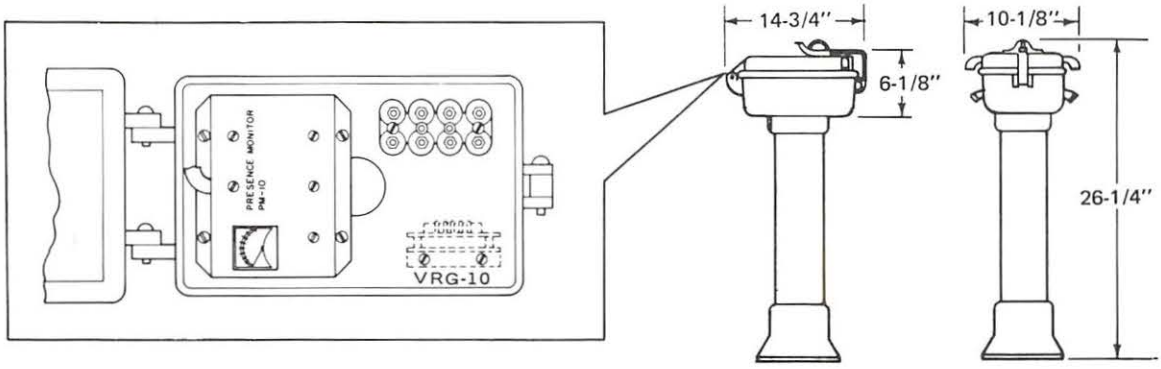

PM-10 PRESENCE MONITOR WITH PEDESTAL MOUNT

PART NO.	NOMINAL DC SOURCE VOLTAGE	DESCRIPTION
N451550-0201	12	PM-10 PRESENCE MONITOR unit only
N451550-0101	12	PM-10 PRESENCE MONITOR WITH PEDESTAL MOUNT
[1] N451550-0202	24	PM-10 PRESENCE MONITOR unit only
[2] N451550-0102	24	PM-10 PRESENCE MONITOR WITH PEDESTAL MOUNT
N451550-0203	14	PM-10 PRESENCE MONITOR unit only
N451550-0103	14	PM-10 PRESENCE MONITOR WITH PEDESTAL MOUNT
N451423-0101	24	VRG-10 VOLTAGE REGULATOR

[1] For use with external voltage regulator — order separately — VRG-10 Regulator

[2] Includes VRG Regulator.

ELECTROCODER EC-10 CODE GENERATOR

Electrocoder EC-10 Code Generator provides coded dc or ac conventional rates for vehicle detection and wayside signaling. The EC-10 may be applied in place of code transmitting relays in ac coded track circuits for cab signaling, or in dc coded track circuits for transmission of aspect information between blocks without line wire.

DESCRIPTION

The code generator is a battery powered electronic device which is available as a three or four code unit. The generator can drive up to two code following relays, via code selection circuits, whose contacts then apply coded dc or ac to the track circuit.

The EC-10 is compatible with conventional relay systems and can be used to upgrade existing systems.

The solid state components of the EC-10 are mounted on two printed circuit boards. A sheet steel cover encloses and protects the generator's components, and provides for shelf or wall mounting.

OPERATION

The generator produces 3 [or 4] code rates simultaneously, each of which can drive one or two code following relays. A single code generator can operate two independent track circuits, providing each with any of the available code rates.

The generator, as shown in the typical application illustration, drives a code following relay at one of the generator code rates. The rate is selected through code selection logic. Relay contacts then apply coded dc or ac to the track to operate decoding equipment at the opposite end of the track circuit.

The use of code following relays provides isolation from the track circuits, and increases protection from lightning and other destructive transients.

CHARACTERISTICS

INPUT REQUIREMENTS

- 10.5 to 15.0 volts dc (12V dc nominal)
- Current (@12V dc nominal)
  Three code generator driving
  one relay...135 ma.
  two relays...165 ma.
  Four code generator driving
  one relay...140 ma.
  two relays...170 ma.
- Reverse battery and surge protection built-in

OUTPUT CHARACTERISTICS

- Nominal Code Rates
  Three code generator: 75, 120, and 180
  Four code generator: 75, 120, 180, and 270
- Drives two 135-ohm 8/12V dc relays
  Type PC250B Plug-in or Type CD
  Shelf mounted
- Short circuit protected
- Frequency stable with variations in input voltage and temperature

TEMPERATURE RANGE

−40°C [−40°F] to +70°C [+158°F]

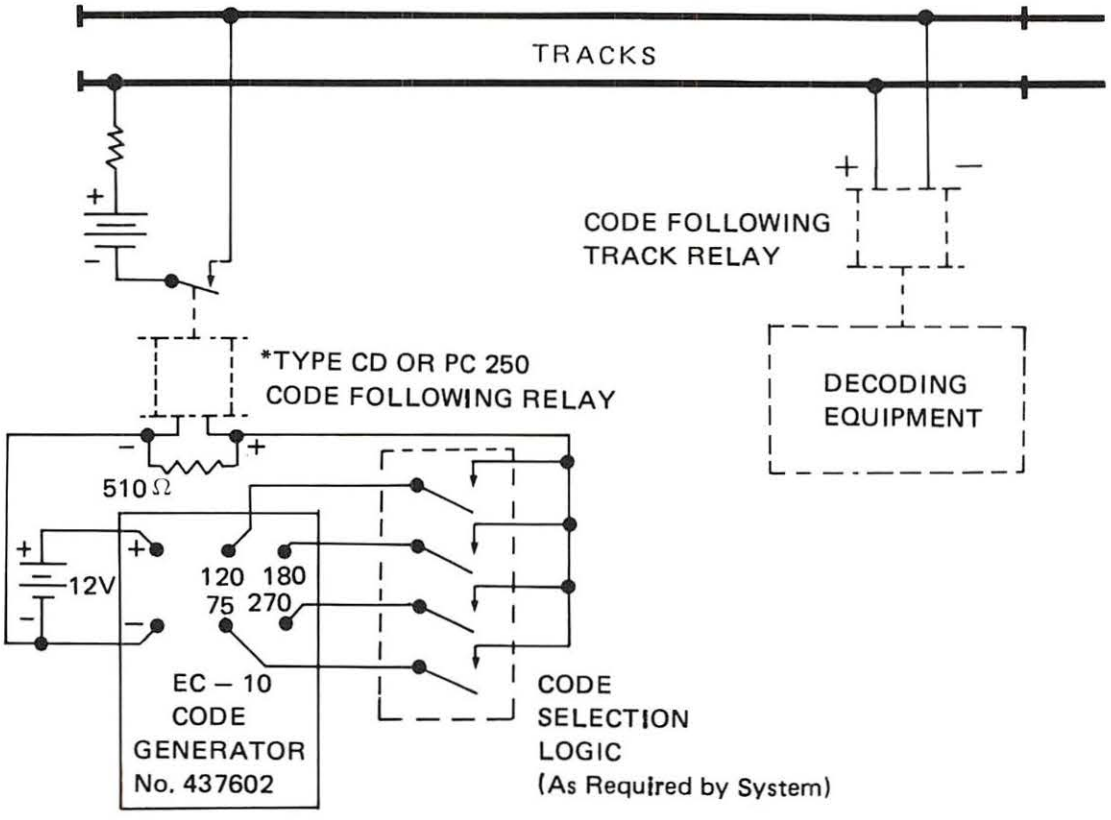

*Each relay should have its own 510 ohm snubbing resistor.

ELECTROCODER EC-10

To order, select either the 3 code or 4 code unit and specify the part number shown below.

In addition to the Code Generator, code following dc relay [s] are required. Part numbers for 135 ohm code following relays of various contact arrangements to satisfy most applications, are listed in the tabulation below.

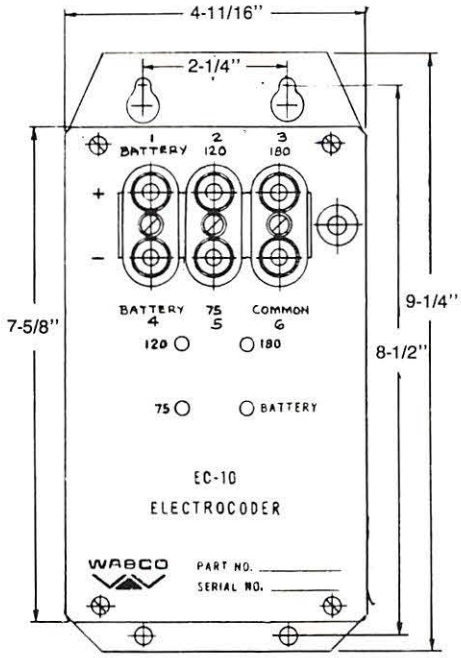

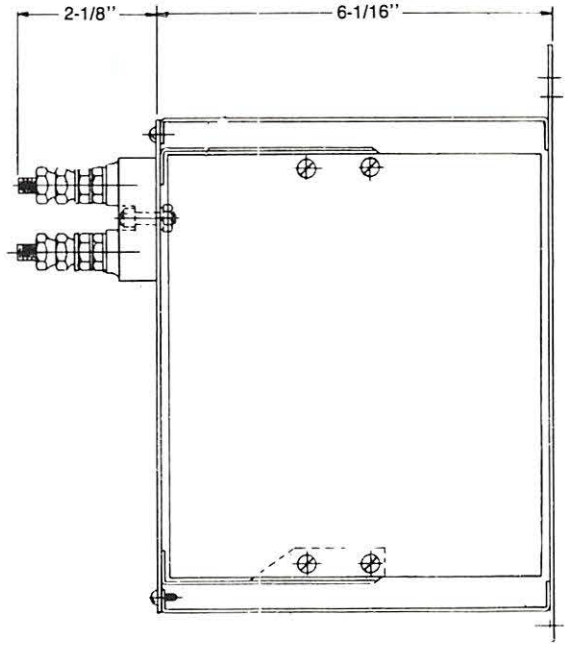

Part No.	Code Rates
N437501	3 CODE – 75, 120, 180
N437602	4 CODE – 75, 120, 180, 270

RELAYS

	PC250B Relays
N322559-003	4 FB L. V. Contacts
N322559-004	4 FB H. V. Contacts
N322559-005	2 FB L. V. and 2 FB H. V. Contacts
N382814	Mounting Base
	CD Relays
N223954	3 FB L.V. and 1 FB H.V. Contacts

L.V. (low voltage) contacts are recommended for use in circuits below 50 volts, H.V. (high voltage) contacts are recommended above 50 volts. H.V. contacts are not recommended for low voltages because of the contact resistance they develop.

NOTE: For complete detail parts and additional information, refer to service manual SM6059.

HOUSINGS, CASES, AND JUNCTION BOXES

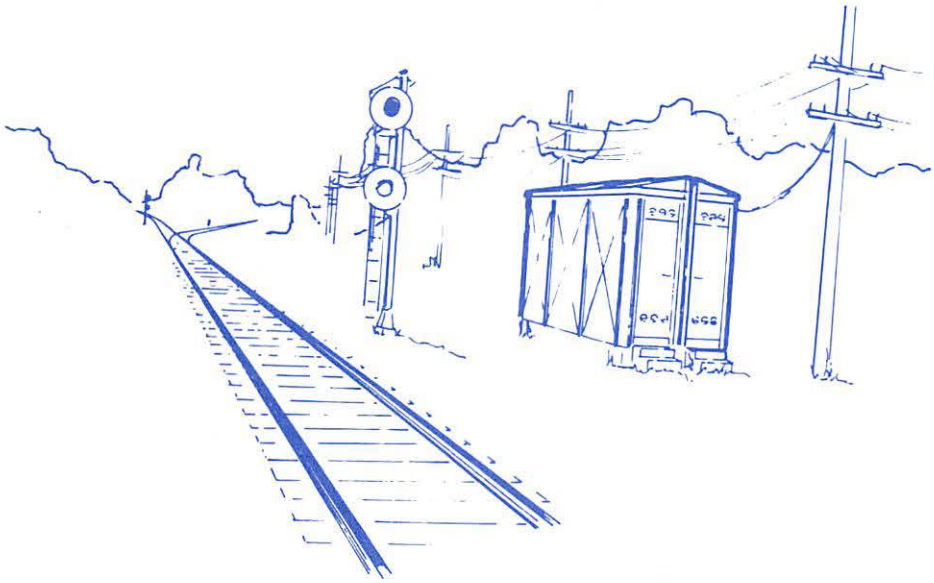

RSE-9

PEDESTAL MOUNTED JUNCTION BOXES

Pedestal Mounted Junction Boxes are used in any installation where underground cables are to be terminated.

DESCRIPTION

US&S Pedestal Mounted Junction Boxes are rugged, field housings in which terminal blocks, variable resistors, fuse holders and various other signaling components are mounted.

The pedestal is constructed with a side entrance, located near the bottom of the riser, for the parkway cable. Because the pedestal is placed directly in the ground, the need for concrete foundations is eliminated.

Terminal blocks which accommodate from four to 48 terminals are of the AAR type (#14-24) molded in blocks of bakelite insulation. Terminal nuts are located so that socket wrenches may be used on them.

Knockouts for steel or hose conduits or multi-conductor fittings are provided on two opposite sides of the junction boxes.

OPTIONAL EQUIPMENT

A number of optional items are available with pedestal mounted junction boxes. These include ventilators and fittings for conduit and cable openings. Product listings and illustrations of these items are provided on page 4 of this section. In addition, junction boxes with provisions for heaters are available. Information on junction boxes with heaters is available on request.

FEATURES

- Larger Junction Boxes (12-24 terminals) are equipped with two elbow type ventilators with fine mesh screen to provide air circulation and to minimize condensation.
- Sealed cover joints and outside cover bolts protect box from elements and dust.
- All exposed bolts, nuts, and washers are cadmium plated to resist rust.
- Pedestal features side and bottom openings for protection of incoming cables brought in from underground.
- Larger junction boxes designed with well underneath terminal compartment for pot-heading and sealing of incoming cables.

PEDESTAL MOUNTED JUNCTION BOXES

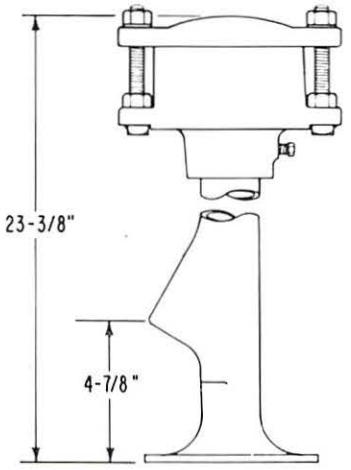

4 TERMINAL JUNCTION BOX WITH PEDESTAL

PART NO.	DESCRIPTION
N386513	With four terminals and two connectors for 1/2" x 5/8" O. D. cable.
N393981	With four terminals and one connector for 3/8" x 1/2" O. D. cable and includes a pipe plug.

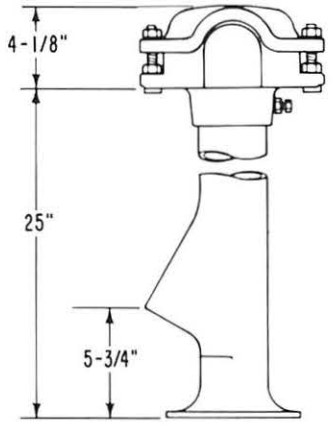

4-10 TERMINAL JUNCTION BOX WITH PEDESTAL

PART NO.	DESCRIPTION
N376937	With four terminals. Does not include conduit fittings.
N376940	With two terminals, and one terminal block equipped with fuse holder for NEC Std. 250V cartridge fuse. Does not include conduit fittings.
N376941	With ten terminals. Does not include conduit fittings.

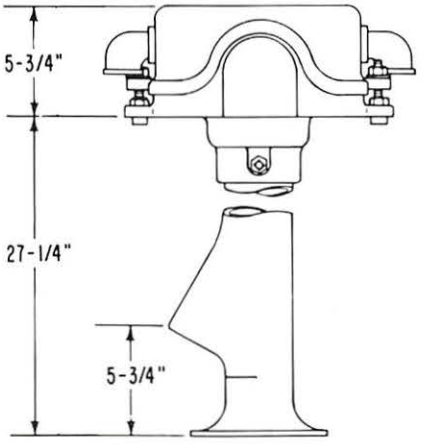

12-24 TERMINAL JUNCTION BOX WITH PEDESTAL

PART NO.	DESCRIPTION
N374992	With 12 terminals. Does not include conduit fittings.
N374993	With 24 terminals. Does not include conduit fittings.

See page 4 for available fittings.

PEDESTAL MOUNTED JUNCTION BOXES

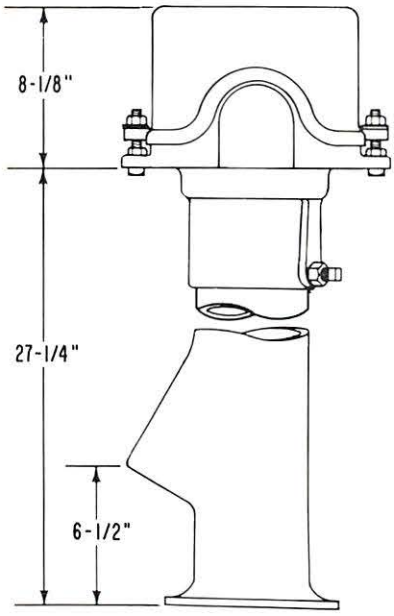

48 TERMINAL JUNCTION BOX WITH PEDESTAL

PART NO.	DESCRIPTION
N349656	With 48 terminals. Does not include conduit fittings.

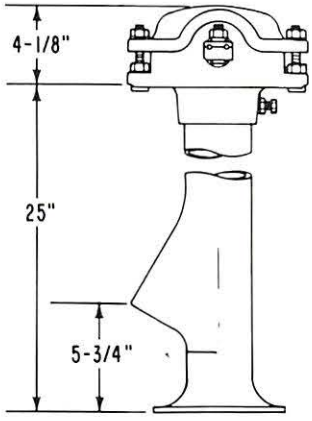

HEAVY DUTY JUNCTION BOX WITH PEDESTAL

PART NO.	DESCRIPTION
N381610	With two heavy duty terminals.
N380286	With two heavy duty terminals and separately mounted terminal block for applying USG-A lightning arrester.
N381622	With two heavy duty terminals and separately mounted terminal block for applying a fixed resistor.
N380288	With two heavy duty terminals and provision for variable resistor. The 4-1/8" dimension shown in diagram is 5-5/16".

See page 4 for available fittings.

FITTINGS

FOR 4-10 TERMINAL JUNCTION BOXES
Order by Part Number and Description

For Cable Outlet
Part No. X376548-001

For 1" Pipe Tap Opening
Part No. 0376549

For Ventilator Application
Part No. 0376550

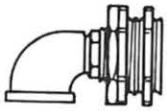

For 3/4" Jake Straight
Box Connector
Part No. 0376552

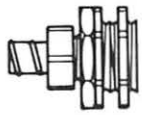

For 1" Jake Straight
Box Connector
Part No. 0376553

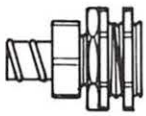

For 1-1/4" Jake Straight
Box Connector
Part No. 0376554

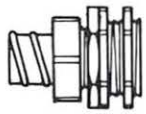

For 3/8" to 1/2" O. D.
Part No. X376555-001

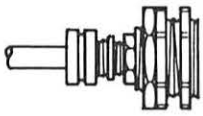

For 1-1/4" Hose Connection
Part No. X381133

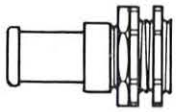

For 2" Hose
Part No. 0376551

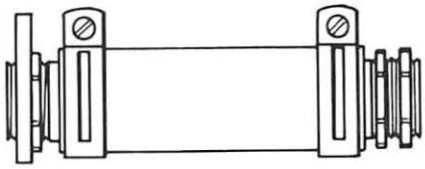

FOR 12-24 AND 48 TERMINAL JUNCTION BOXES
Order by Part Number and Description

Ventilator
Part No. N185702

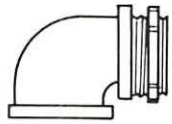

For 2" Insulated Conduit
Part No. X347806-001

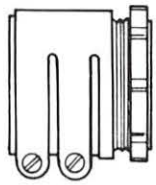

For 1-1/2" Insulated
Conduit
Part No. X376556-001

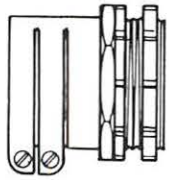

For 2" Conduit
Part No. X347807-001

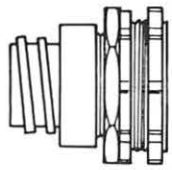

For 1-1/2" Conduit
Part No. X372316-001

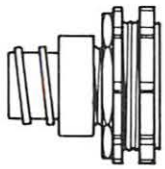

For 1" Conduit
Part No. X382688-001

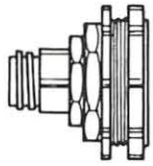

For 1-1/4" Hose
Part No. 0383074

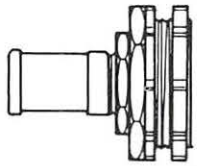

For 1-1/4" Pipe Tap Opening
Part No. X382981

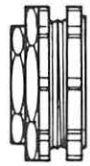

For 2" Hose
Part No. X382904-001

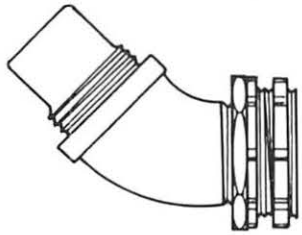

Not used on 48 Terminal Junction Boxes

NOTE: For complete detail parts and additional information, refer to service manual SM5900-A.

JUNCTION BOX BASES

DESCRIPTION

U S & S's experience in signal requirements is reflected in the wide applications offered by a complete line of cast iron and aluminum junction boxes where termination of wires for signals is required. Terminals from 12 to 48 are available with bases being adaptable to 4" and 5" masts, and for 6" mast when using aluminum bases. Another type of cast iron junction box is used with the socket base for 6" mast and provides 24 or 48 terminals. A junction box serves the dual function of providing a means of terminating wiring to a variety of railroad signals while providing a base for the signal mast.

A cast iron junction box for mounting on socket bases is furnished for 6" signal masts. This junction box has a 2-1/4" x 4" opening at the bottom, through which cables may be fed. The rear of the box has a 2" x 4" opening for wiring to the signal case. Both openings coincide with holes in the base. The base of the junction box is designed to rest on a boss on the socket base and to be clamped to the side of the socket base with hook bolts.

Junction boxes are adaptable to wiring searchlight or ground or bridge signals, color light ground or bridge signals, as well as highway crossing signals.

Terminals are easily accessible by simply removing the junction box cover. Terminals are AAR type (No. 14-24) on 1" centers molded in blocks of bakelite insulation. Terminal nuts are easily accessible to socket wrenches.

Elbow type ventilators, equipped with fine mesh screen, are used to provide air circulation and minimize condensation.

TERMINAL ARRANGEMENTS

Junction box bases are available with 12 or 24 terminals, or 24 or 48 terminals. These terminal configurations are obtained by either using a half base with junction box and plain half base, or by using two half bases with junction box.

FEATURES

- Constructed for rugged use and long service.
- Terminals easily accessible.
- Weather and dust proof — cover packed to seal the terminal compartment.
- Sufficient space for pot-heading and sealing incoming cables.
- Screened elbow ventilators or provisions for ventilators — provides for air circulation inside junction box.

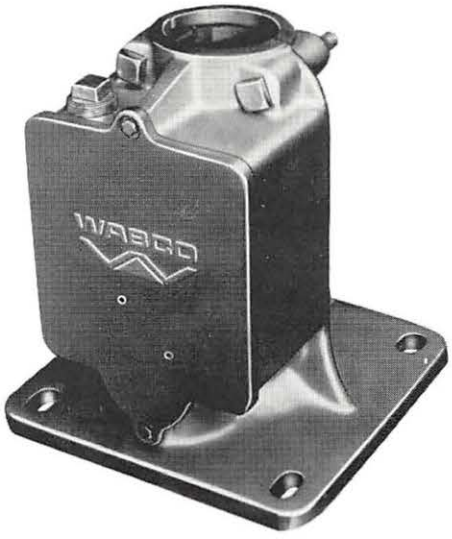

MOUNTING DIMENSIONS

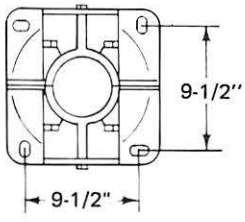

12 or 24
TERMINALS

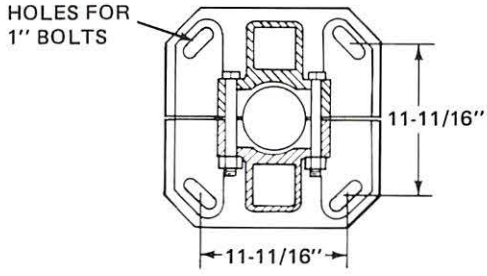

24 or 48
TERMINALS

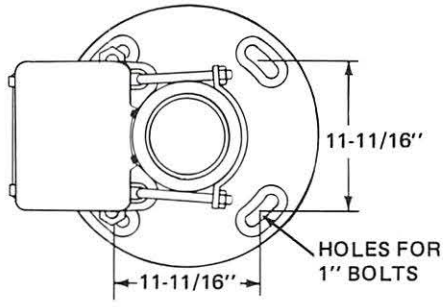

SOCKET BASE
24 or 48
TERMINALS

4" MAST JUNCTION BOX BASES
12 OR 24 TERMINALS

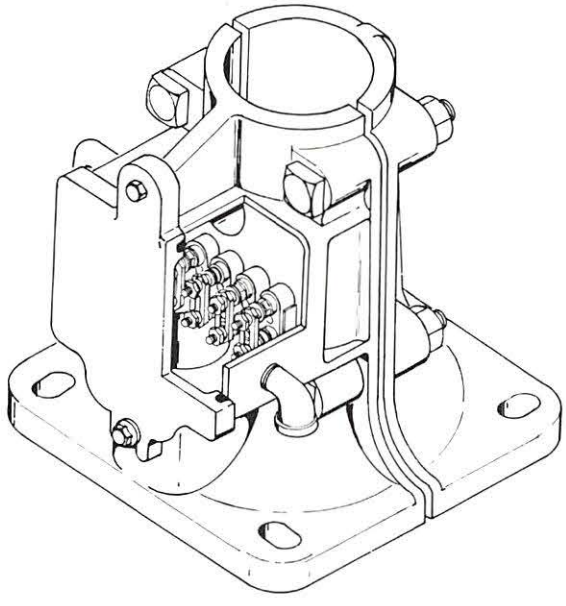

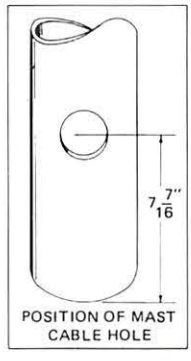

CLAMPING BOLTS
INCLUDED WITH
ALL BASES
LISTED.

ALUMINUM			
PART NO.	FDN. BOLT SPACING	BASE HEIGHT	NO. TERM.
J705049-0101	11-11/16"	11-3/4"	12
J705049-0201	9-1/2"	12"	12
J705049-0203 *	9-1/2"	12"	0
J705049-0301	11-11/16"	11-3/4"	12
J705049-0602 **	11-11/16"	17"	24

CAST IRON			
PART NO.	FDN. BOLT SPACING	BASE HEIGHT	NO. TERM.
N215037	9-1/2"	12"	12
N215039	9-1/2"	12"	24

NOTE: *2 half bases without junction boxes.
**With 1-1/2" pipe tap and plug.

5" MAST JUNCTION BOX BASES
24 OR 48 TERMINALS
(11-11/16" FDN. BOLT SPACING – 17" BASE HEIGHT)

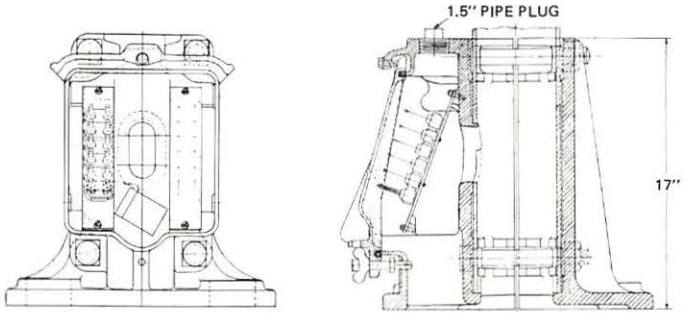

ALUMINUM – 24 TERMINALS	
PART NO.	**NOTES**
J705049-0801	Ground or bridge mounting with all signal units above base.

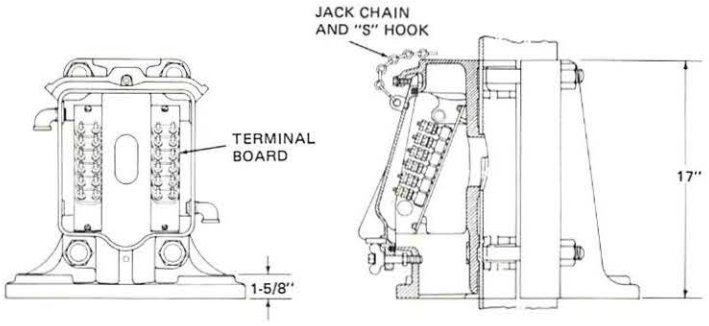

CAST IRON – 24 TERMINALS	
PART NO.	**NOTES**
N221366	Ground or bridge mounting with all signal units above base.
N262056	Bridge mounting only with suspended signal units. Box cover has single jack chain and hook.
N304789	Same as above, except with 2" pipe tapped holes on both sides of junction box.

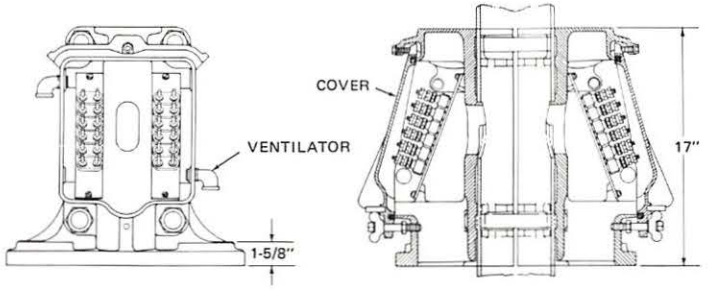

CAST IRON – 48 TERMINALS	
PART NO.	**NOTES**
N214857	Two junction boxes. Ground or bridge mounting, signal units above base.

6" MAST JUNCTION BOX BASES
24 OR 48 TERMINALS

Junction boxes are provided with either 24 or 48 terminals, and with or without fittings, and without the socket base. If socket base is desired, this should be specified. Aluminum Junction Boxes do not require a socket base.

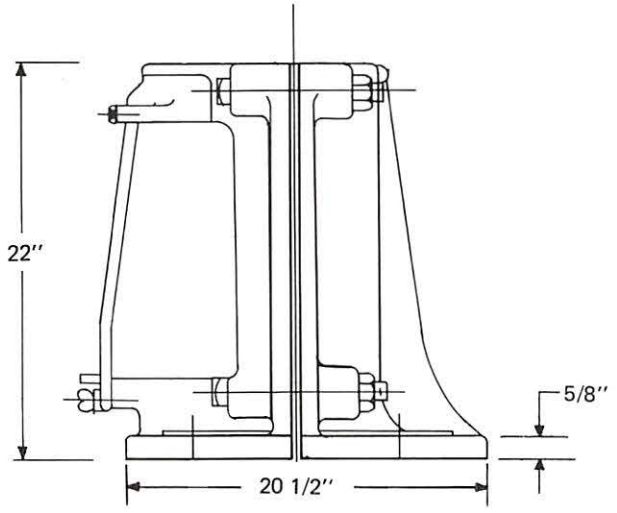

ALUMINUM	
PART NO.	**NOTES**
J705049-0701	Clamping bolts included.

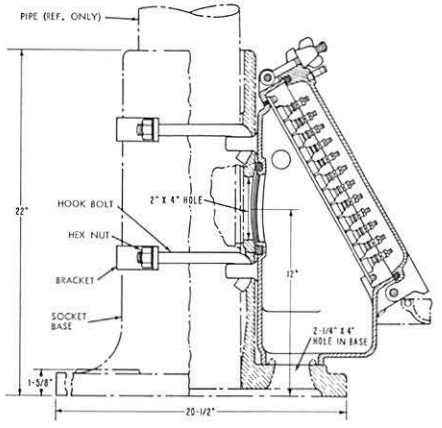

CAST IRON	
PART NO.	**NOTES**
X-384947-001	Includes fittings, does not include socket base.
0384946	Same as above, except with 48 terminals.
N212958	Without fittings.
N104478	Does not include socket base and fittings.

If fittings or socket base is desired, order from the following list.

M104294	Bracket
M104873	Hook Bolt
J048026	Hex Nut, 3/4"
M106144	Socket Base for 6" mast

WABCO

An American-Standard Company

PIPE MOUNTED JUNCTION BOXES

The Pipe Mounted Junction Boxes described herein are for mounting directly to the side of the pipe post. These junction boxes are designed for terminating wiring above the base of the signal mast in lieu of a combined base and junction box. Two types of junction boxes are available: One for 3″ to 6″ pipes, with one hole in the back for wire entrance; and one for 4″ to 8″ pipes, with two holes in the back for wire entrance.

The junction box is clamped on the side of the pipe post with U-bolts (provided separately) so that the wire entrance hole(s) in the back will coincide with similar holes in the pipe.

Terminal board arrangements consist of a plywood board on which two multiple unit terminal blocks are mounted, 12 each on 1″ centers. The two terminal blocks are mounted on the plywood board face to face, assembled with a full complement of terminal nuts and washers, and 1″ terminal connectors. The terminal blocks are located so that one row (12 terminals) may be raised, by the user, when 2-3/8″ centers are desired. The user can remove unwanted terminals from the terminal blocks, and mount resistors, etc., as required, to the plywood board. Terminals are AAR type (No. 14-24) molded in blocks of bakelite insulation. The cover can be padlocked to prevent unauthorized entry.

UNION SWITCH & SIGNAL DIVISION
WESTINGHOUSE AIR BRAKE COMPANY
Swissvale, PA 15218

PRINTED IN U.S.A.

RSE-9C3
REV. 1/78

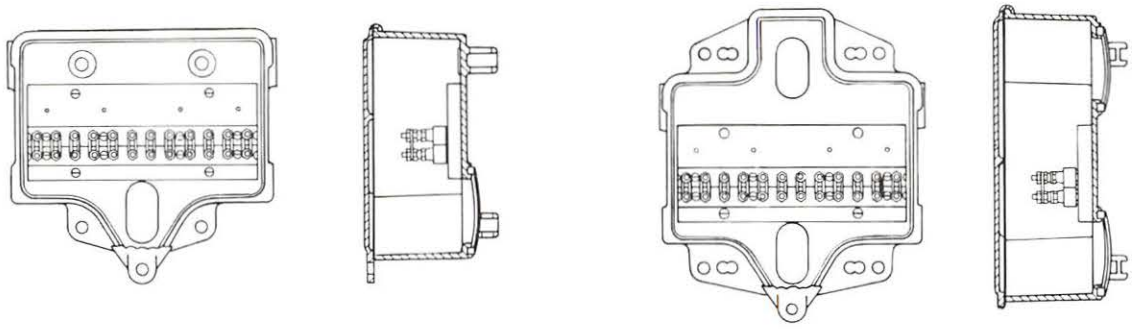

A B

Order by Part No. and Description Shown in Caps.

REF.	PART NO.	DESCRIPTION	NOTES
A	N372979	JUNCTION BOX complete with 24 terminals for 3" to 6" pipe posts.	
B	N372993	JUNCTION BOX complete with 24 terminals for 4" to 8" pipe posts.	

NOTE

U-bolts and nuts for attaching the Junction Boxes are not provided. If desired, order from the following list.

USED WITH REFERENCE ITEM A

M195507	U-BOLT for 3" pipe (2 required)
M183410	U-BOLT for 3-1/2" pipe (2 required)
M118554	U-BOLT for 4" pipe (2 required)
M052795	U-BOLT for 5" pipe (2 required)
N214445	U-BOLT for 6" pipe (2 required)
J048020	HEX NUT, 5/8" (4 required)

USED WITH REFERENCE ITEM B

M216946	U-BOLT for 4" and 5" pipe (2 required)
M109746	U-BOLT for 6" pipe (2 required)
M215117	U-BOLT for 8" pipe (2 required)
J048020	HEX NUT, 5/8" (4 required)

BOOTLEG

The US&S Bootleg provides a convenient means for connecting a parkway cable with track circuit conductors.

The Bootleg is made of cast iron, 18-9/16" high with a side entrance, located near the bottom of the riser, for the parkway cable.

The parkway cable is easily terminated to a stud located in the head. The track conductors are secured in place by a simple mechanical clamp.

ORDERING REFERENCE

PART NO.	DESCRIPTION
N393883	BOOTLEG

PRINTED IN U.S.A.

HOUSINGS, CASES AND JUNCTION BOXES

HOUSINGS

HM-II Equipment Houses RSE-9A1

CASES

CS-II Equipment Cases RSE-9B1

JUNCTION BOXES

Pedestal Mounted Junction Boxes RSE-9C1
Junction Box Bases RSE-9C2
Pipe Mounted Junction Boxes RSE-9C3
Bootleg RSE-9C4

FOUNDATIONS

Foundation Piers RSE-9D1

FOUNDATION PIERS

US&S pier foundations are an economical answer to mounting equipment cases, eliminating the need for concrete foundations. Because the cast iron pier raises the case or house from the ground, interior condensation is minimized by providing better ventilation, and wires are more easily run into the case.

FEATURES

- Economy — eliminates need for concrete foundations.
- Lower installation costs.
- Lower maintenance costs.

FOUNDATION PIER FOR 17-1/2'' CASE
ORDERING REFERENCE

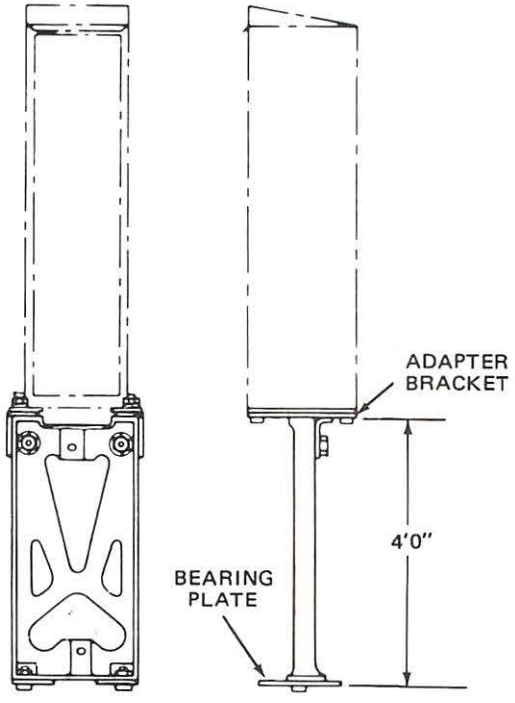

PART NO.	DESCRIPTION
X284673-001	FOUNDATION PIER for 17-1/2'' equipment case complete with adapter bracket, bearing plate, bolts, nuts and washers.

FOUNDATION PIERS FOR EQUIPMENT CASES
ORDERING REFERENCES

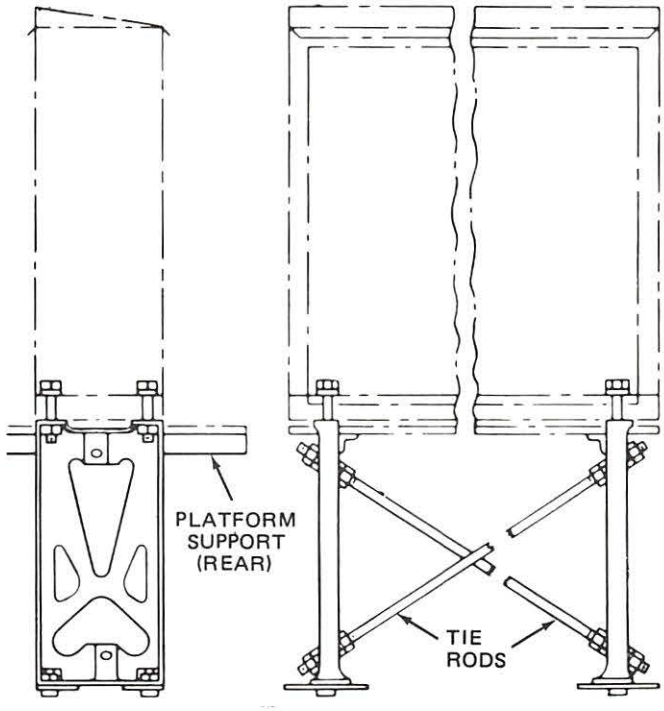

PART NO.	DESCRIPTION
X268334-001	FOUNDATION PIERS for equipment cases complete with platform supports (front and rear), bearing plates, bolts, nuts and washers. Does not include tie rods which must be ordered separately to suit size of case. Refer to listing below.
X268335-001	Same as above, except platform supports for front only.
X265125-001	Same as above, except without bearing plates and platform supports.

TIE RODS
ORDERING REFERENCES

PART NO.	DESCRIPTION
N268103	TIE ROD for 3' 3-1/2'' & 3'5'' case, complete with hardware (2 required).
N268097	TIE ROD for 4'11'' case, complete with hardware (2 required).
N268095	TIE ROD for 6'9'' case, complete with hardware (2 required).
N268093	TIE ROD for 9'8'' case, complete with hardware (2 required).

GRADE CROSSING WARNING

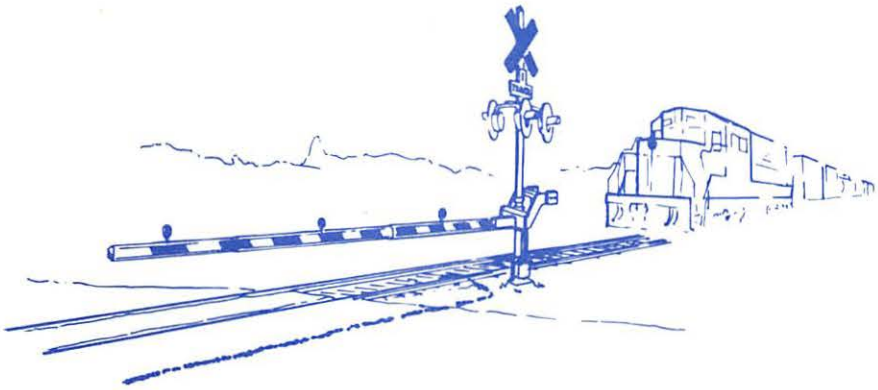

RSE-10

GRADE CROSSING PROTECTION

GRADE CROSSING WARNING ASSEMBLIES

Flashing Signal Light Assembly RSE-10A1
Flashing Signal Light Assembly with Model 75 Crossing Gate RSE-10A2
Gate Assembly with Stub Mast RSE-10A3
Grade Crossing Cantilever Assembly RSE-10A4

GRADE CROSSING WARNING EQUIPMENT

Grade Crossing Masts RSE-10B1
Junction Box Bases for 4 and 5 Inch Masts RSE-10B2
Grade Crossing Signs RSE-10B3
Grade Crossing Bell ,BA-10 . . . . . RSE-10B4
Flashing Signal Lights with Junction Box Crossarms RSE-10B5
Junction Box Crossarms, XA-120 . . . . . RSE-10B6
Signal Light Units, HC-120A, HC-100 . . . . . RSE-10B7
Gate Mechanism and Components, Model 75 . . . . . RSE-10B8
Aluminum and Fiberglass Crossing Gate Arms RSE-10B9
Adapter Bracket for Crossing Gate Arms RSE-10B10

FOUNDATIONS RSE-10F1

FLASHING LIGHT SIGNAL ASSEMBLY

US&S offers a complete grade crossing flashing signal light assembly for use in either 2-way or 1-way traffic approach signaling. The high quality optical system of the light units meets the needs of modern high speed highways and surpasses AAR light output specifications. Signs feature Scotch-Lite® backgrounds in choices of engineering grade or hi-intensity.

The major components are manufactured from aluminum to provide long service life with minimal maintenance, and all parts conform to AAR specifications. A complete flashing light signal assembly can be installed by two workers.

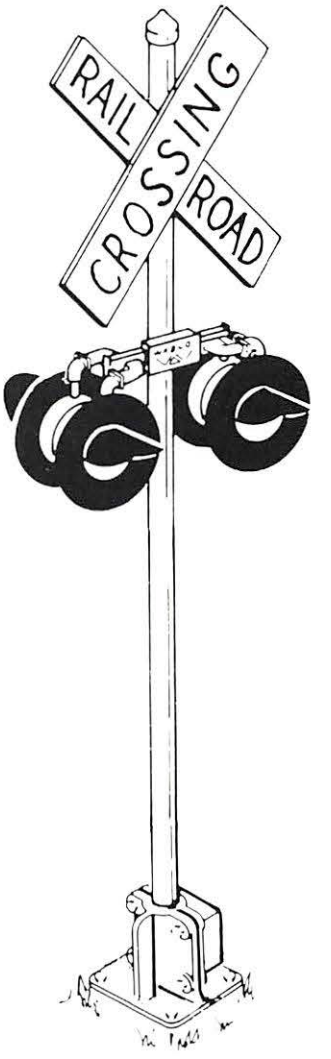

DESCRIPTION

Masts

US&S highway crossing signal masts are manufactured from schedule 40 aluminum pipe for long life, easy handling and corrosion resistance. Masts measuring 13'-6" in length and 4" in diameter are used in standard applications while the 15'-3" mast is necessary whenever additional flashing light assemblies are required for converging highway applications. Follow the ordering instructions on page 3 of this RSE section when selecting masts for converging highway applications.

Pinnacle or Bell

Either a maintenance-free cast aluminum pinnacle or an aluminum warning bell can be mounted atop the signal mast. The BA-10 crossing warning bell features a steel gong mounted in a cast aluminum housing. The bell operates on 10vdc and produces a sound level of 105-113 dbA.

Junction Box Base

The aluminum junction box base, used to support the mast, contains 12 AAR terminals for terminating underground cable from the field to the signal assembly and for making other circuit connections.

FEATURES

- Complete adaptability to converging highway applications.
- Long-range beam Lexan® roundels.
- Lightweight aluminum components.
- Choice of 8-3/8" (HC-100) or 12" (HC-120A) Light Units.
- Choice of 20" or 24" backgrounds for 12" lights.
- Higher light output with12" dia. deep dish parabolic reflector.

® Lexan is a registered trademark of the General Electric Co.

® Scotch-Lite is a trade name of the 3M Corporation.

FLASHING LIGHT SIGNAL ASSEMBLY

TO ORDER

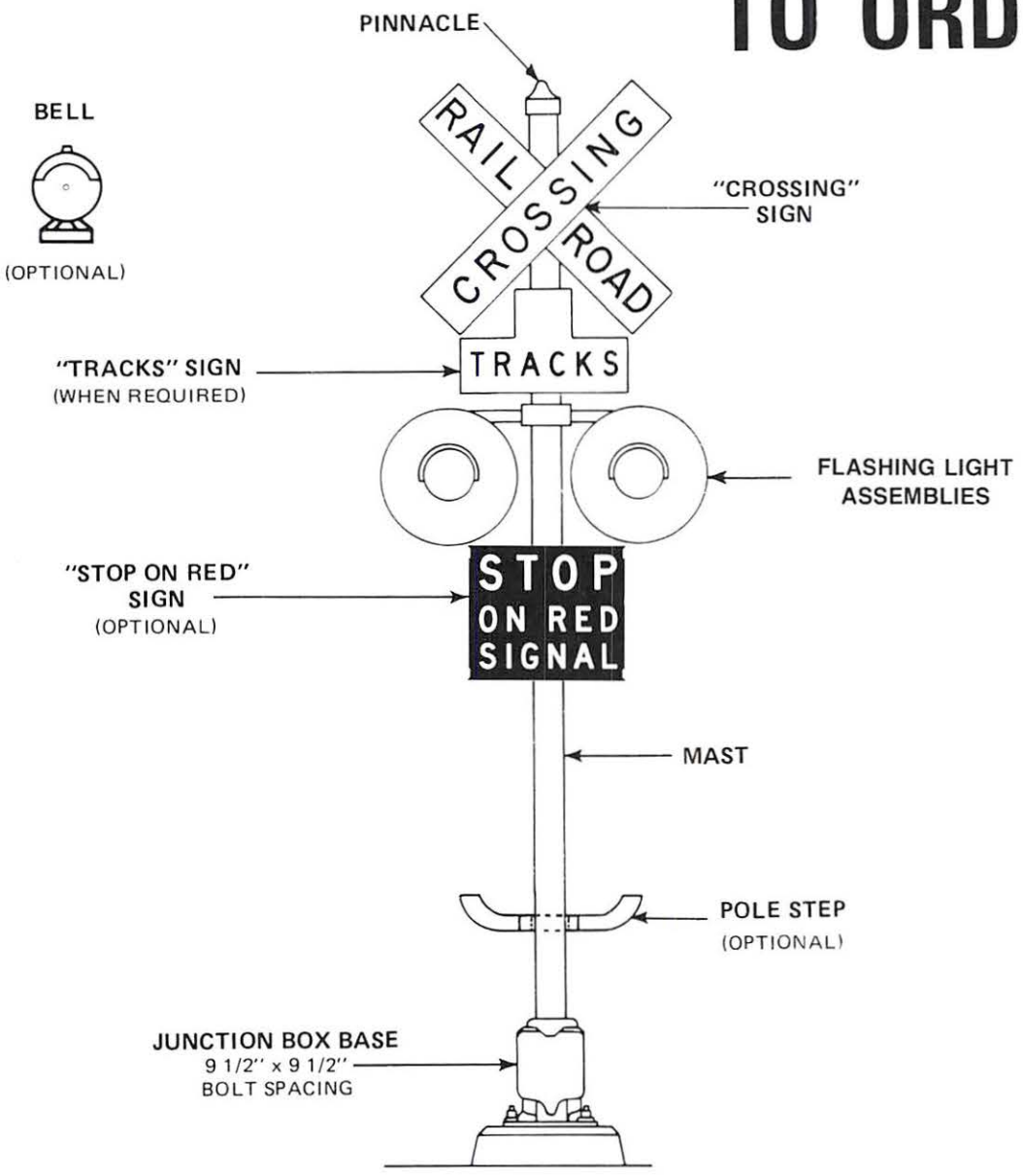

INDEX: FOR DETAILS AND SPECIFICATIONS ON INDIVIDUAL COMPONENTS, PLEASE REFER TO THE SECTIONS LISTED HERE.

MASTS	RSE-10B1	SIGNS	RSE-10B3	JUNCTION BOX CROSSARMS	RSE-10B6
PINNACLE	RSE-10B1	BELL	RSE-10B4	SIGNAL LIGHT UNITS	RSE-10B7
POLE STEP	RSE-10B1	FLASHING LIGHT ASSEMBLIES	RSE-10B5	LAMPS	RSE-17B1
JUNCTION BOX BASE	RSE-10B2				

ALUMINUM MASTS

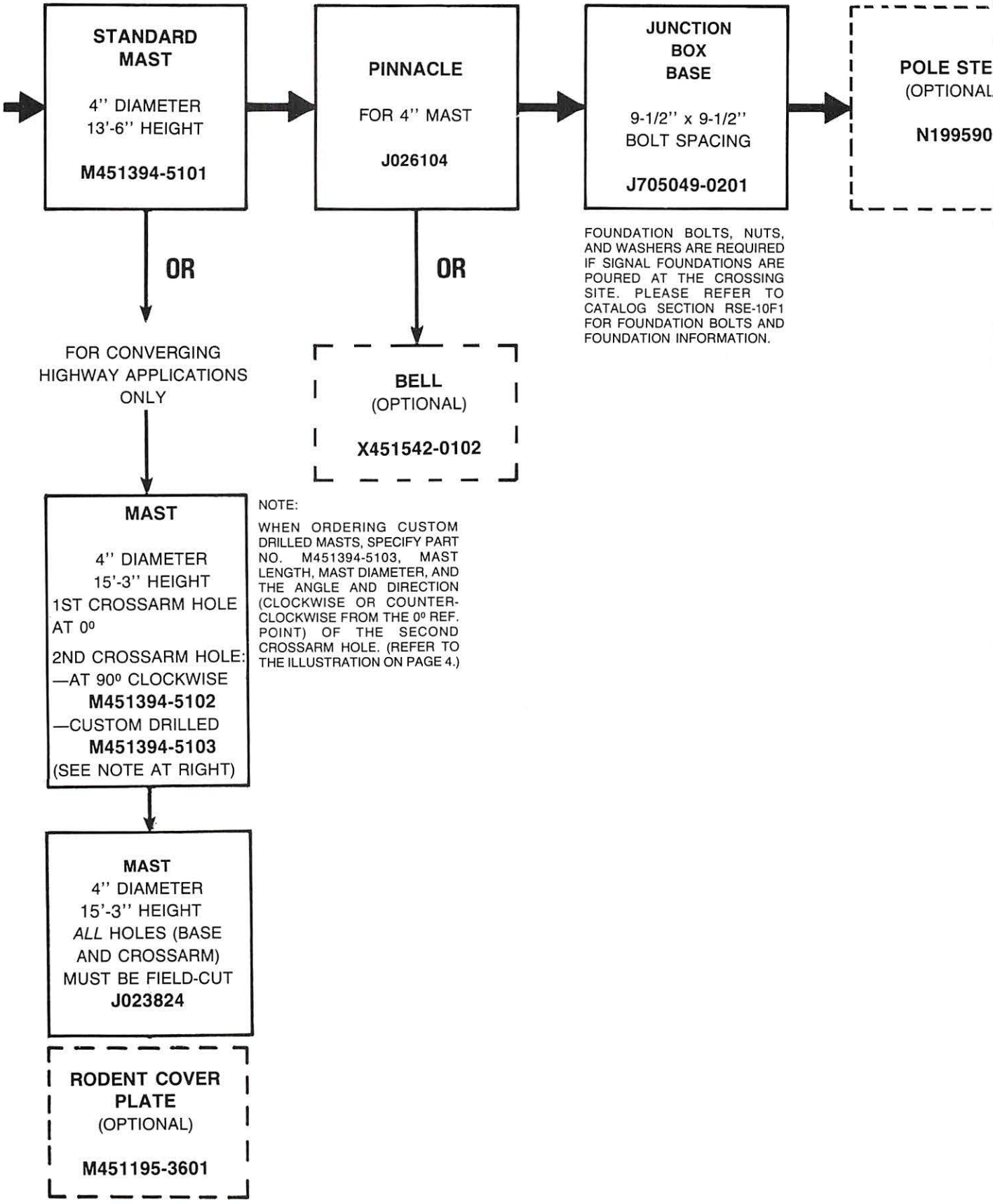

1-WAY/2-WAY GRADE CROSSING SIGNAL ASSEMBLY FOR STANDARD APPLICATIONS

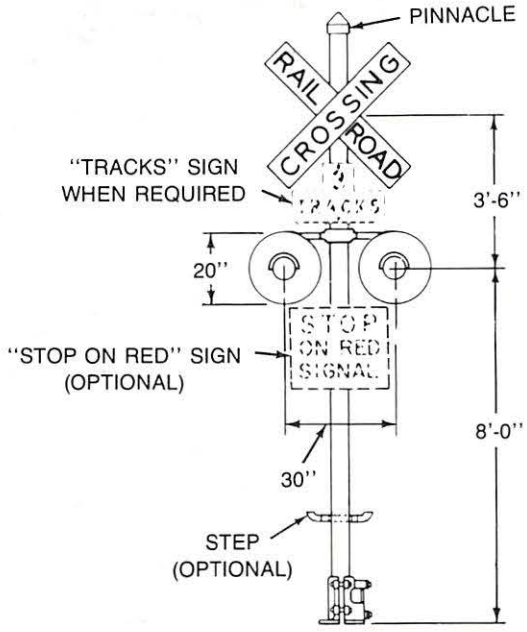

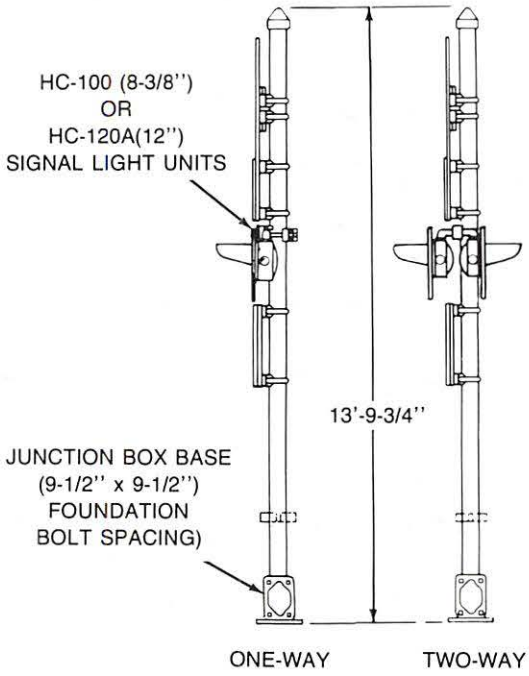

- **4" DIAMETER ALUMINUM MAST**
- **JUNCTION BOX BASE WITH 9½"x9½" BOLT SPACING**
- **"RAILROAD CROSSING" SIGN**
- **CHOOSE 2-WAY OR 1-WAY SIGNAL LIGHT ASSEMBLY**
- **30° SPREAD/15°DEFLECTION ROUNDEL**

2-WAY/4 UNIT

(4 HOODS AND BACKGROUNDS; AND JUNCTION BOX CROSSARM FOR BACK-TO-BACK SIGNAL MOUNTING)

HC-100 (8-3/8")	X435122-001
HC-120A (12')	X451506-0601

1-WAY/2 UNIT

(2 HOODS AND BACKGROUNDS; AND JUNCTION BOX CROSSARM)

HC-100 (8-3/8")	X435123-001
HC-120A (12")	X451506-0602

NOTE: LAMPS MUST BE ORDERED SEPARATELY. SEE PAGE 3 OF THIS RSE SECTION.

CONVERGING HIGHWAY APPLICATIONS

NOTE: ILLUSTRATION SHOWS CONVERGIING LIGHT ASSEMBLY SET AT 30° CLOCKWISE FROM 0° REFERENCE

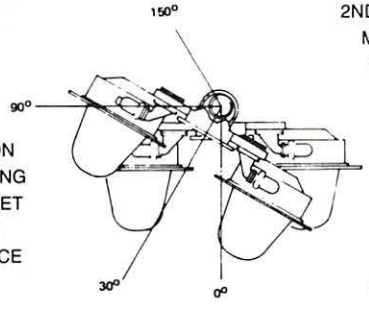

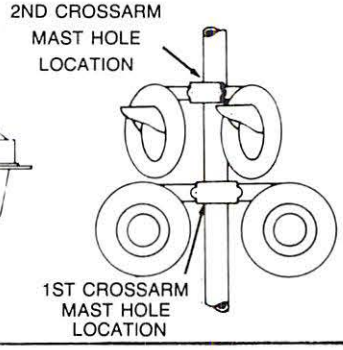

- DETERMINE REQUIRED ANGLE OF CONVERGENCE.
- SPECIFY MAST ANGLE AND DIRECTION OF 2ND CROSSARM HOLE WITH ORDER.
- ORDER ADDITIONAL LIGHT ASSEMBLIES FROM CHART, PAGE 3, OR FROM RSE-10B5.

FLASHING LIGHTS

2-WAY
30º SPREAD
15º DEFLECTION

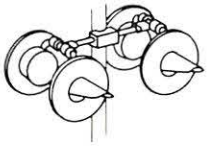

HC 100
(8-3/8" DIA.)
X451506-0102

HC-120A
(12" DIA.)
X451506-0104

OR

1-WAY
30º SPREAD
15º DEFLECTION

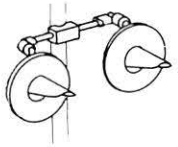

HC 100
(8-3/8" DIA.)
X451506-0101

HC 120
(12" DIA.)
X451506-0103

LAMPS

S-11
10V - 18 WATT
S.C.B.C. BASE
J071463

OR

S-11
10V - 25 WATT
S.C.B.C. BASE
J071574

OR

G-16½
110V - 25 WATT
S.C.B.C. BASE
J714054

OR

QUARTZ IODINE
10V - 16 WATT
S.C.B.C. BASE
J714283

OR

QUARTZ IODINE
10V - 36 WATT
S.C.B.C. BASE
J714284

NOTE:

2 LAMPS ARE REQUIRED FOR EACH 1-WAY LIGHT ASSEMBLY.

4 LAMPS ARE REQUIRED FOR EACH 2-WAY LIGHT ASSEMBLY.

S.C.B.C. = SINGLE CONTACT BAYONET CANDELABRA

SIGNS

'RAILROAD CROSSING'

ENGINEERING GRADE
X392931-001

HI-INTENSITY
X392931-007

"TRACKS" SIGN
WHEN REQUIRED
(SPECIFY TRACK NUMBER)
ENGINEERING GRADE
X392929-001

HI-INTENSITY
X392929-005

'STOP ON RED'
(OPTIONAL)

ENGINEERING GRADE
X392930-001

HI-INTENSITY
X392930-005

STOP

YOUR ASSEMBLY
IS COMPLETE

Flashing Light Assemblies

US&S flashing light assemblies consist of a XA-120 junction box crossarm, HC-100 8-3/8" diameter light units or HC-120 12" diameter light units, and mounting hardware. They are available in 1-way and 2-way (back-to-back) configurations as shown on page 3.

The XA-120 crossarms are manufactured from aluminum for long service life and minimal maintenance. They permit the azimuth and the range of each light unit to be adjusted independently. (See page 2 of RSE-10B5.)

The aluminum HC-100 and HC-120A light units feature precision lamp adjustment and include shatter-resistant red Lexan® roundels that provide a standard beam pattern of 30° horizontal spread and 15° vertical deflection.

Light assemblies that include light units with beam patterns of 20°/10°, 20°/32° and 70°/0° are also available. Consult RSE-10B5 if these light assemblies are needed in your particular application. Page 1 of RSE-10B5 also includes a brief explanation of roundel beam patterns along with some application guidelines.

The HC-120A lights are also available with optional 24" backgrounds in addition to the standard 20" diameter backgrounds. The larger 24" diameter provides a background-to-roundel ratio equivalent to an 8-3/8" diameter light unit. Flashing light assemblies featuring HC-120A lights with 24" backgrounds are also listed in section 10B5.

Signs

All US&S signs conform to AAR specifications and are manufactured from aluminum for lightweight, ease of installation, durability and minimal maintenance. Each sign includes the necessary brackets and hardware for most mounting.

US&S signs feature the finest quality backgrounds and lettering in a choice of engineering grade or hi-intensity Scotchlight® material.

Optional Items

Optional items such as a pole step, a rodent cover and a "Stop on Red Signal" sign offer an extra measure of convenience, reliability and safety respectively. The pole step enables a maintainer to service the light units more easily. The rodent cover is mounted at the bottom of the signal mast to prevent rodents from building nests in the masts and possibly damaging the signal wiring. The "Stop on Red" sign is a requirement of several state highway departments in the U.S. and serves to further direct attention to the flashing lights.

HOW TO ORDER

US&S flashing light signal assemblies can be ordered in two ways. First, complete basic 1-way or 2-way signal assemblies can be ordered for standard applications as shown on the last page of this catalog section. If one of these basic configurations conforms to your requirements, it can be ordered by specifying just one piece number. If some optional pieces, such as a bell, are also desired, they can be ordered separately with the assembly. Lamps are not included with the signal assemblies and must also be ordered separately. Refer to the lamp listing on page 3 of this section.

US&S also provides a unique component system that enables you to easily order the assembly configuration of your choice. Refer to the ordering section and follow the arrows to order each component required for your specific application. The bold arrows leading from left to right let you build your assembly step by step until your assembly is complete. The light arrows leading down are alternate selections of the basic component and options to meet individual specifications.

Order by part number in bold type and brief description i.e.:

Mast, 4", Part No. M451394-5101, etc.

FLASHING SIGNAL LIGHT ASSEMBLY WITH MODEL 75 CROSSING GATE

ASSEMBLY DESCRIPTION

U S & S offers a complete Grade Crossing Flashing Signal Light Assembly with Model 75 Crossing Gate. The automatic crossing gate is completely adjustable and will provide grade crossing warning with gate arm lengths from 17 to 40 feet. The gate mechanism is adaptable to 2 wire or 3 wire circuitry and has a built in fail-safe operation.

U S & S flashing signal lights can be used in 2-way or 1-way traffic approach signaling. The high quality optical system meets the needs of modern high speed highways. Signs feature Scotch-Lite® backgrounds in choices of engineering grade or hi-intensity.

This assembly is designed for new installations or can be adapted readily to existing installations. All components are manufactured to provide long service life with minimal maintenance. All components conform to AAR requirements.

HOW TO ORDER

U S & S provides a unique component system that enables you to easily order the assembly configuration of your choice. Just turn the page and follow the arrows to order each component required for your specific application. The bold arrows leading from left to right let you build your assembly step by step until your assembly is complete. The light arrows leading down are alternate selections of the basic component and options to meet individual specifications.

Order by part number in bold type and brief description, i.e. Mast, 5", Part No. M451394-3902, etc.

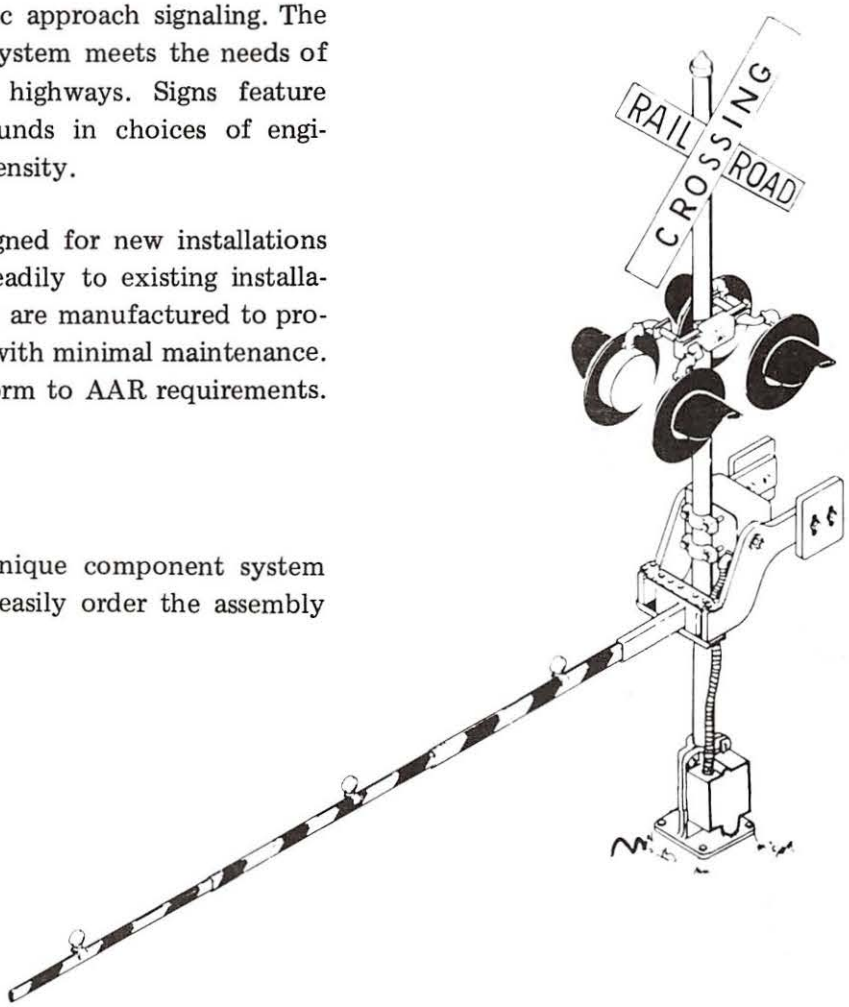

FLASHING SIGNAL LIGHT ASSEMBLY WITH MODEL 75 CROSSING GATE

TO ORDER

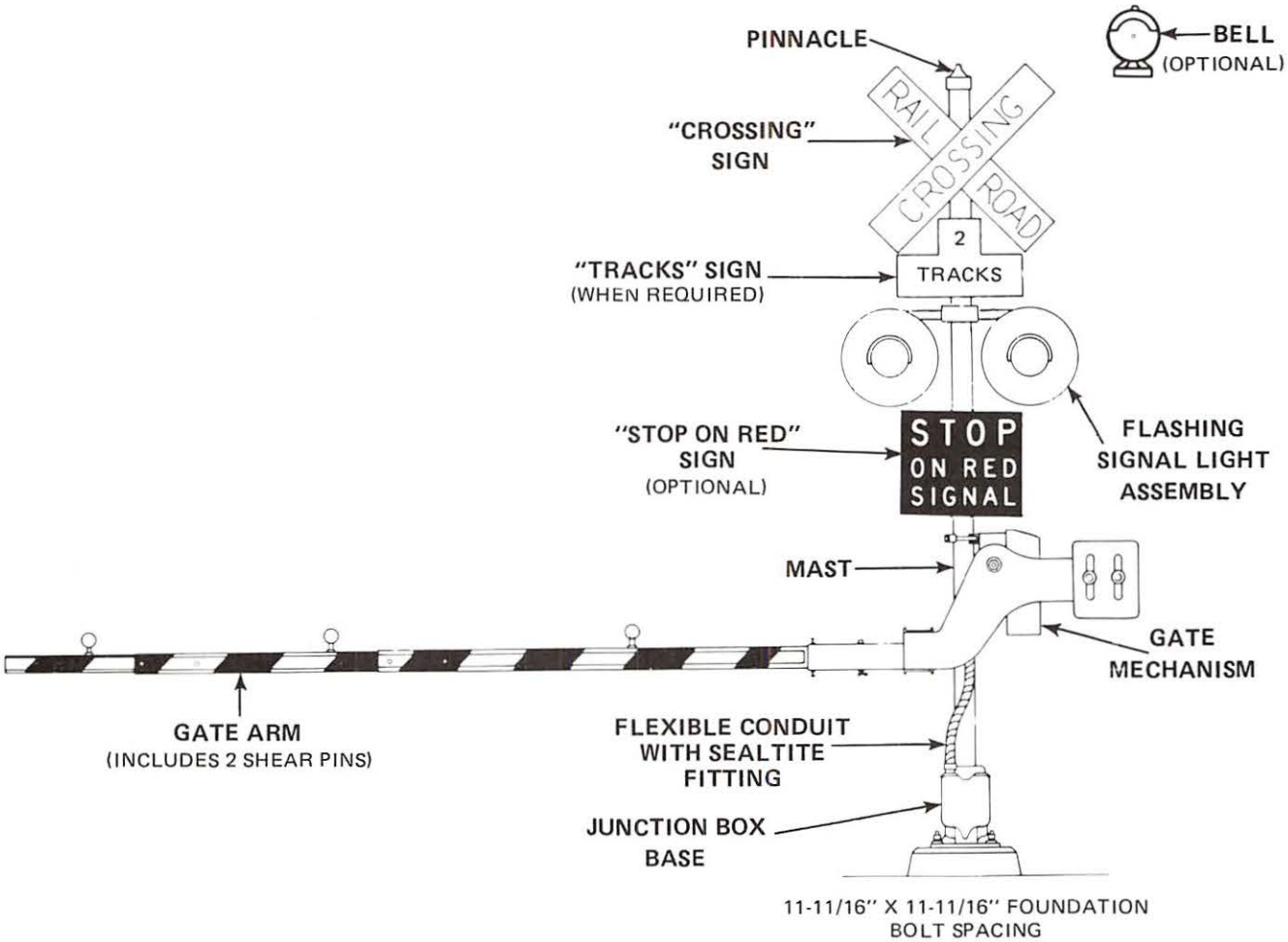

INDEX: FOR DETAILS AND SPECIFICATIONS ON INDIVIDUAL COMPONENTS, PLEASE REFER TO THE SECTIONS LISTED HERE.

MASTS AND PINNACLE	RSE-10B1	SIGNAL LIGHTS WITH JUNCTION BOX CROSSARMS	RSE-10B5	GATE MECHANISM	RSE-10B8
JUNCTION BOX BASES	RSE-10B2	JUNCTION BOX CROSSARMS	RSE-10B6	GATE ARMS	RSE-10B9
SIGNS	RSE-10B3	SIGNAL LIGHT UNITS	RSE-10B7	GATE ARMS ADAPTER BRACKETS	RSE-10B10
BELL	RSE-10B4				

ALUMINUM MASTS

GATE ARMS

GA

STANDARD MAST

5" DIAMETER
13' 6" HEIGHT

M451394-3902

OR

FOR CONVERGING HIGHWAY APPLICATIONS ONLY
(DETAILS ON P. 4)

MAST

5" DIAMETER
15' 3" HEIGHT
1ST HOLE AT 0°

2ND HOLE:
FIELD DRILLED
M451394-4001

AT 30° ANGLE
M451394-4002

AT 90° ANGLE
M451394-4003

AT 150° ANGLE
M451394-4004

RODENT COVER PLATE
(OPTIONAL)

M451195-3602

RECOMMENDED. SEE RSE-10B1 FOR APPLICATION DESCRIPTION.

JUNCTION BOX BASE

11 11/16"
BOLT SPACING

J705049-0801

AND

PINNACLE

FOR 5" MAST

J026111

OR

BELL
(OPTIONAL)

N451542-0101

FOUNDATION BOLTS, NUTS, AND WASHERS ARE REQUIRED IF SIGNAL FOUNDATIONS ARE POURED AT THE CROSSING SITE. PLEASE REFER TO CATALOG SECTION RSE-10F1.

ALUMINUM

	REFLECTIVE STRIPING ENG. GRADE	REFLECTIVE STRIPING HI-INTENSITY
17 - 27 FT. ARMS		
4 IN. LIGHTS	N451070-0201	N451070-0211
7 IN. LIGHTS	N451484-5703	N451484-5704
28 - 33 FT. ARMS		
4 IN. LIGHTS	N451070-0207	N451070-0213
7 IN. LIGHTS	N451484-5501	N451484-5716
34 - 40 FT. ARMS		
4 IN. LIGHTS	N451484-3601	N451484-3604
7 IN. LIGHTS	N451484-5727	N451484-5728

OR

FIBERGLASS

	REFLECTIVE STRIPING ENG. GRADE	REFLECTIVE STRIPING HI-INTENSITY
17 - 27 FT. ARMS		
4 IN. LIGHTS	N451484-5707	N451484-5708
7 IN. LIGHTS	N451484-5709	N451484-5710
28 - 33 FT. ARMS		
4 IN. LIGHTS	N451484-5719	N451484-5720
7 IN. LIGHTS	N451484-5721	N451484-5722
34 - 40 FT. ARMS		
4 IN. LIGHTS	N451484-5731	N451484-5732
7 IN. LIGHTS	N451484-5733	N451484-5734

LAMPS ARE NOT PROVIDED WITH THE GATE ARMS AND MUST BE ORDERED SEPARATELY. ORDER 10V-18W S.C.B.C. BASE LAMP, PART NO. J071463.

WITH
(2 V

FOR A
17'-27'
28'-33'
34'-40'

WIT
(3 V

FOR A
17'-27'
28'-33'
34'-40'

PIVO

RECO
FOR

MODEL 75 ALUMINUM CROSSING GATE SPECIFICATIONS

Gate Mechanism Assembly

Weight of Mechanism	225 lbs.
Power Supply	12 vdc
Nominal Current (raising)	Refer to Service Manual 6043
Drive	Electric motor. High torque-low speed
Gear Train	115:1 reduction; pre-lubricated, factory sealed
Main Shaft Bearing	Pre-lubricated, factory sealed
Circuit Controller	Contact type; cam-operated, clear position adjustable from 70° to 90°
Circuit Controller Contacts	Factory adjusted 1/16" opening (min.); wipe, 1/64" (min.)
Mounting Mast	Existing 4 or 5" pipe masts, or new pre-drilled pipe masts can be furnished

Gate Arm Assembly

Arm Length	Adjustable - 17-27', 28-33', or 34-40' in 1' increments measured from ℄ of mast
Arm Weight (total)	30 lbs. for 17-27' arm 40 lbs. for 28-33' arm 50 lbs. for 34-40' arm
Counterweights	222 lbs. for 17-27' arm 323 lbs. for 28-33' arm 496 lbs. for 34-40' arm
Weight of Arm Support Bracket	30 lbs.
Arm Ascent Time	Choice of max. clearing times of 10,15, or 20 seconds at min. battery voltage. Refer to Service Manual 6043.
Arm Descent Time	Variable by adjusting snubbing resistor (Range 8 to 15 sec.)
Arm Warning Stripes	16" alternate stripes of reflective red and reflective white
Arm Warning Lamps	3 weatherproof lamps

Recommended Wire Sizes and Batteries — Refer to Service Manual 6043.

Features

- Gate arm torque can easily be measured in any position.
- Can be ratcheted to horizontal position for gate arm replacement.
- Can be applied to either 2-wire or 3-wire control circuits.
- Clear position adjustable from 70° to 90°.
- Gate Arm drops to horizontal position in the event of power failure.
- Can be installed by two men — no special tools needed for installation.
- Constructed of aluminum — requires minimal maintenance.
- Gate arms adjustable — eliminates the need to stock various sizes.
- Incorporates a unique break-away feature — a shear pin separates when the gate arm is struck, allowing the gate arm to fall free, undamaged by the striking vehicle.

CONVERGING HIGHWAY APPLICATIONS

NOTE: ILLUSTRATION SHOWS CONVERGING SIGNAL ASSEMBLY SET AT 30°

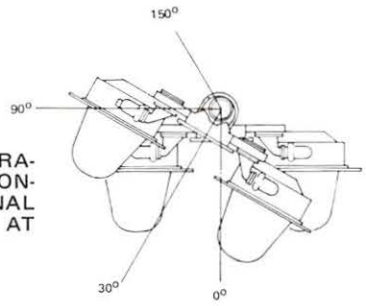

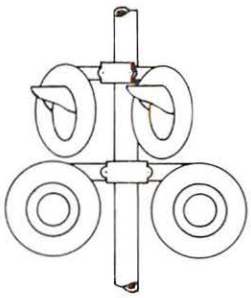

- DETERMINE REQUIRED ANGLE FROM ILLUSTRATION
- SPECIFY ANGLE WITH ORDER
- ORDER EXTRA LIGHTS FROM CHART, PAGE 3.

MODEL 75 FLASHING
TE MECHANISMS LIGHTS LAMPS SIGNS

MODEL 75
I DN-22A RELAY
VIRE CIRCUIT)

RMS
X451483-0601
X451483-0603
X451483-0605

OR

MODEL 75
HOUT RELAY
VIRE CIRCUIT)

RMS
X451483-0602
X451483-0604
X451483-0606

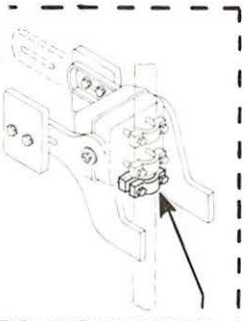

T CLAMP ASSEMBLY
(OPTIONAL)
X451483-0638

MMENDED, SEE RSE-10B8
APPLICATION DETAILS.

FLEXIBLE
CONDUCT
WITH
SEALTITE
FITTING

X451483-0639

2 WAY
30°/15°
DEFLECTION

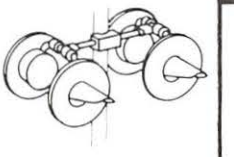

HC 100
(8 3/8" DIA.)
X451483-0617

HC 120A
(12" DIA.)
X451483-0618

OR

1 WAY
30°/15°
DEFLECTION

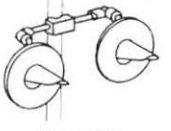

HC 100
(8 3/8" DIA.)
X451506-0301

HC 120A
(12" DIA.)
X451506-0303

10 V - 18 WATT
S.C.B.C. BASE

J071463

OR

10 V - 25 WATT
S.C.B.C. BASE

J071574

OR

110 V - 25 WATT
S.C.B.C. BASE

J714054

OR

QI
10 V - 16 WATT

J714283

OR

QI
10 V - 36 WATT

J714284

NOTE:
2 LAMPS ARE REQUIRED FOR EACH 1 WAY LIGHT ASSEMBLY.

4 LAMPS ARE REQUIRED FOR EACH 2 WAY LIGHT ASSEMBLY.

S.C.B.C.=SINGLE CONTACT BAYONET CANDELABRA

Q.I.=QUARTZ IODIDE

'RAILROAD CROSSING'

ENGINEERING GRADE
X392931-002

HI-INTENSITY
X392931-008

"TRACKS" SIGN
WHEN REQUIRED
(SPECIFY NUMBER)

ENGINEERING GRADE
X392929-002

HI-INTENSITY
X392929-006

'STOP ON RED'
with stand-off
(OPTIONAL)

ENGINEERING GRADE
X438077

HI-INTENSITY
X438077-001

STOP

YOUR ASSEMBLY
IS COMPLETE

DESCRIPTION

Masts

U S & S masts are constructed of aluminum. This provides long life and easy handling. The rust and corrosion resistant construction means minimum maintenance. A 15' 3" mast for Converging Highway Applications comes pre-drilled or field drilled to add an additional signal light.

Pinnacle or Bell

Select either the standard aluminum mast pinnacle of the grade crossing bell. The bell is constructed of aluminum with a steel gong. It provides extra warning for pedestrians.

Junction Box Base

The aluminum junction box base, used to support the mast, contains 24 AAR terminals for terminating underground cable and for making other circuit connections. The base is designed and manufactured to provide long service life with minimal maintenance.

Gate Arms

U S & S offers a choice of two excellent, maintenance-free gate arm constructions: aluminum or fiberglass. Both come in three adjustable lengths to achieve crossing gate applications from 17 to 40 feet. Each gate arm has one fixed aluminum section and two aluminum or fiberglass telescoping sections. The gate arms are linked to the support assembly by a shear pin to prevent mechanism damage if the arm is struck. The diagonal striping comes in either engineering grade or Hi-Intensity Scotch-Lite® reflective red and white. Each arm section has a weather-proof, bi-directional light in a choice of 4" or 7" diameters. The wiring harness and each light unit is plug connected for easy replacement.

Gate Support Arms

The gate support arms are constructed of cast aluminum. The gate arm bracket provides 12 inches of lateral adjustment in 1 inch increments to clear overhead obstructions.

Gate Mechanism

The gate mechanism, mounted in a steel chassis, is housed in an aluminum enclosure and consists of the drive motor, gear train, control elements, and terminals for control wiring. The mechanism operates from the 12VDC motor with 115:1 speed reduction gear train. The mechanism comes either with the DN-22A relay for 2 wire control circuitry or without for 3 wire control circuitry. The Gate is locked into the clear position by an electromagnetic brake. If the power fails, the gate arm drops to the horizontal.

Signal Light Assemblies

These are the finest optical lamp systems available. U S & S offers Signal Light Assemblies for 2-way and 1-way traffic approach signaling. Both assemblies feature a choice of an 8 3/8" roundel (HC-100) or 12" roundel (HC-120A) for situations requiring larger light indication. The signal light units contain Lexan® roundels having a 30° horizontal spread and a 15° downward deflection. These units meet the needs of modern high speed highways, and exceed AAR light output specifications.

The junction box crossarm with each unit is made of aluminum. The junction boxes have an access plate to AAR Terminals for easy installation. The aluminum fittings allow for independent horizontal and vertical adjustment.

®Lexan is a trade name of the General Electric Company.

Signs

All U S & S signs conform to AAR requirements. Each sign includes the necessary brackets and hardware for fastening to the mast.

U S & S uses the finest quality Scotch-Lite® backgrounds and lettering in a choice of engineering or hi-intensity.

WABCO

GATE ASSEMBLY WITH STUB MAST

ASSEMBLY DESCRIPTION

U S & S offers a complete Grade Crossing Stub Mast Assembly with Model 75 Crossing Gate. The automatic crossing gate is completely adjustable and will provide grade crossing warning with gate arm lengths from 17 to 40 feet. The gate mechanism is adaptable to 2 wire or 3 wire circuitry.

This assembly is designed for new installations or can be adapted readily to existing installations. All components are manufactured to provide long service life with minimal maintenance. All components conform to AAR requirements. A complete assembly can be installed by two men.

HOW TO ORDER

U S & S provides a unique component system that enables you to easily order the assembly configuration of your choice. Just turn the page and follow the arrows to order each component required for your specific application. The bold arrows leading from left to right let you build your assembly step by step until your assembly is complete. The light arrows leading down are alternate selections of the basic component and options to meet individual specifications.

Order by part number in bold type and brief description i.e. Mast, 4", Part No. M451394-4301, etc.

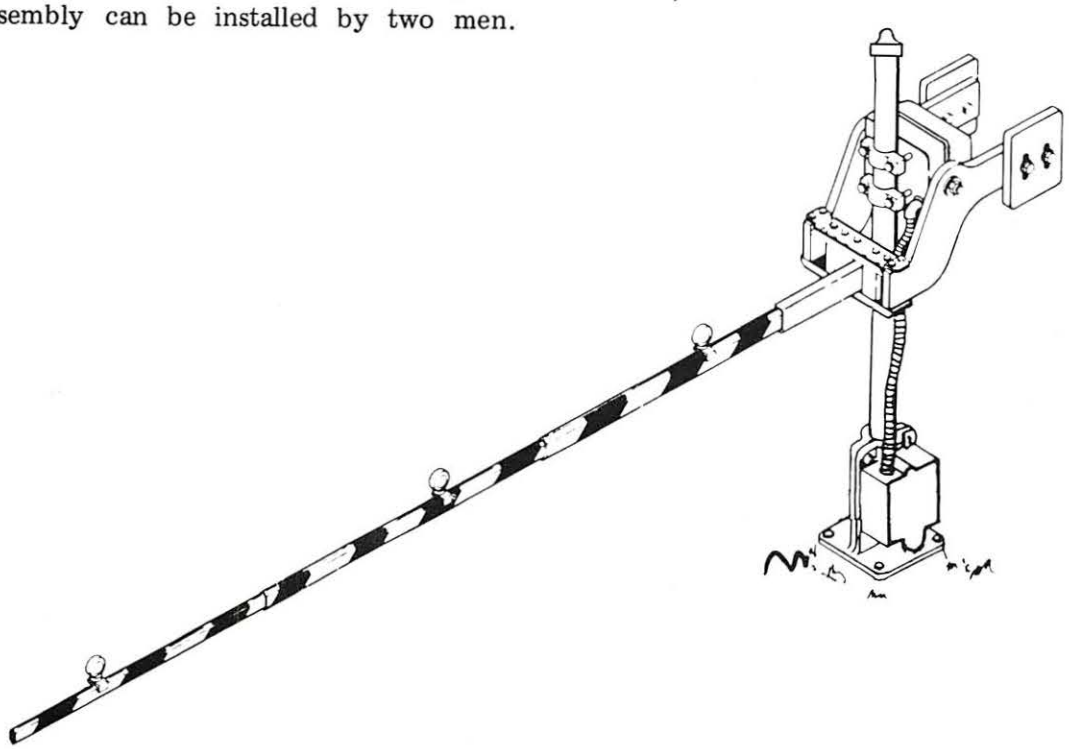

GATE ASSEMBLY WITH STUB MAST

TO ORDER

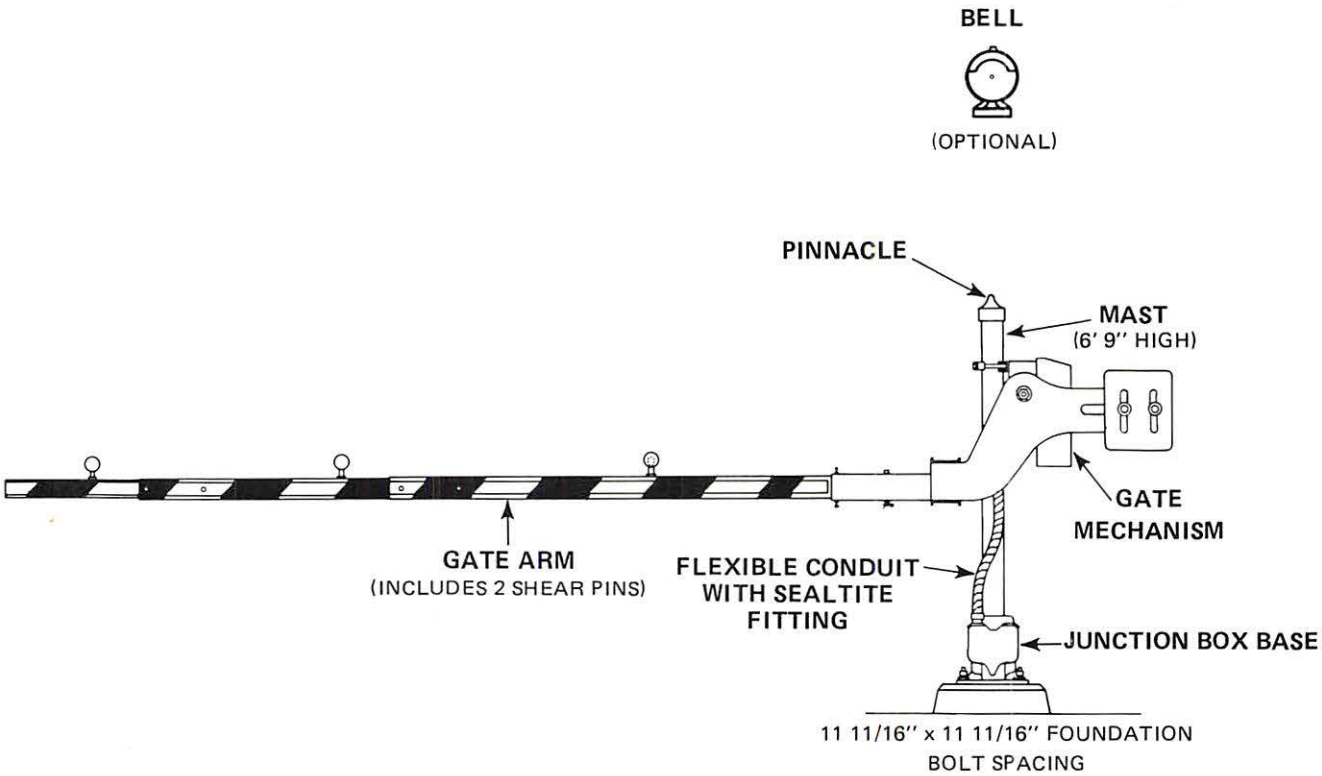

INDEX : FOR DETAILS AND SPECIFICATIONS ON INDIVIDUAL COMPONENTS, PLEASE REFER TO THE SECTIONS LISTED HERE.

BELL	RSE-10B4	GATE ARM	RSE-10B9
PINNACLE	RSE-10B1	FLEXIBLE CONDUIT WITH SEALTITE® FITTING	RSE-10E1
MAST	RSE-10B1	JUNCTION BOX BASE	RSE-10B2
GATE MECHANISM	RSE-10B8		

ALUMINUM MASTS

GATE ARM

STANDARD 4" DIAMETER MAST

6' 9" HEIGHT
M451394-4301

OR

STANDARD 5" DIAMETER MAST

6' 9" HEIGHT
M451394-4201

PINNACLE

4" MAST
J026104

5" MAST
J026111

OR

BELL
(OPTIONAL)

4" MAST
X451542-0102

5" MAST
N451542-0101

JUNCTION BOX BASE

11 11/16" BOLT SPACING

4" MAST
J705049-0602

5" MAST
J705049-0801

FOUNDATION BOLTS, NUTS, AND WASHERS ARE REQUIRED IF SIGNAL FOUNDATIONS ARE POURED AT THE CROSSING SITE. PLEASE REFER TO CATALOG SECTION RSE-10F1.

RODENT COVER PLATE
(OPTIONAL)

4" MAST
M451195-3601

5" MAST
M451195-3602

RECOMMENDED. SEE RSE-10B1 FOR APPLICATION DESCRIPTION.

ALUMINUM

	REFLECTI ENG. GRADE
17 - 27 FT. ARMS	
4 IN. LIGHTS	**N451070-0201**
7 IN. LIGHTS	**N451484-5703**
28 - 33 FT. ARMS	
4 IN. LIGHTS	**N451070-0207**
7 IN. LIGHTS	**N451484-5501**
34 - 40 FT. ARMS	
4 IN. LIGHTS	**N451484-3601**
7 IN. LIGHTS	**N451484-5727**

OR

FIBERGLASS

	REFLECTI ENG. GRADE
17 - 27 FT. ARMS	
4 IN. LIGHTS	**N451484-5707**
7 IN. LIGHTS	**N451484-5709**
28 - 33 FT. ARMS	
4 IN. LIGHTS	**N451484-5719**
7 IN. LIGHTS	**N451484-5721**
34 - 40 FT. ARMS	
4 IN. LIGHTS	**N451484-5731**
7 IN. LIGHTS	**N451484-5733**

LAMPS ARE NOT PROVIDED WITH THE GATE ORDERED SEPARATELY. ORDER 10V-18W S.C.B NO. J071463.

MODEL 75
GATE MECHANISMS

VE STRIPING
HI-INTENSITY

N451070-0211
N451484-5704

N451070-0213
N451484-5716

N451484-3604
N451484-5728

MODEL 75
WITH DN-22A RELAY
(2 WIRE CIRCUIT)

FOR ARMS	
17'-27'	X451483-0601
28'-33'	X451483-0603
34'-40'	X451483-0605

OR

MODEL 75
WITHOUT RELAY
(3 WIRE CIRCUIT)

FOR ARMS	
17'-27'	X451483-0602
28'-33'	X451483-0604
34'-40'	X451483-0606

FLEXIBLE CONDUIT WITH SEALTITE® FITTING

X451483-0639

STOP

YOUR ASSEMBLY IS COMPLETE

VE STRIPING
HI-INTENSITY

N451484-5708
N451484-5710

N451484-5720
N451484-5722

N451484-5732
N451484-5734

ARMS AND MUST BE
.C. BASE LAMP, PART

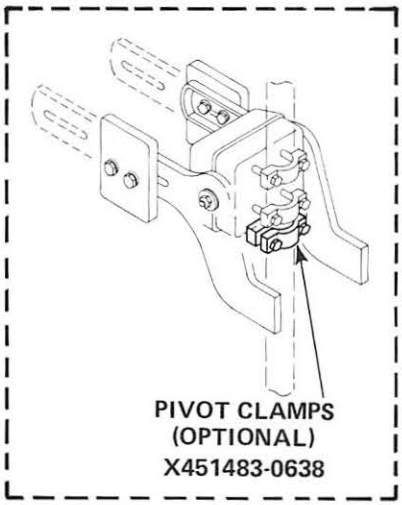

RECOMMENDED. SEE RSE-10B8
FOR APPLICATION DETAILS.

DESCRIPTION

Gate Arms

U S & S offers a choice of two excellent, maintenance-free gate arm constructions: aluminum or fiberglass. Both come in three adjustable lengths to achieve crossing gate applications from 17 to 40 feet. Each gate arm has one fixed aluminum section and two aluminum or fiberglass telescoping sections. The gate arms are linked to the support assembly by a shear pin to prevent mechanism damage if the arm is struck. The diagonal striping comes in either engineering grade or Hi-Intensity Scotch-Lite® reflective red and white. Each arm section has a weather-proof, bi-directional light in a choice of 4" or 7" diameters. The wiring harness and each light unit is plug connected for easy replacement.

Gate Support Arms

The gate support arms are constructed of cast aluminum. The gate arm bracket provides 12 inches of lateral adjustment in 1 inch increments to clear overhead obstructions.

Gate Mechanism

The gate mechanism, mounted in a steel chassis, is housed in an aluminum enclosure and consists of the drive motor, gear train, control elements, and terminals for control wiring. The mechanism operates from the 12VDC motor with 115:1 speed reduction gear train. The mechanism comes either with the DN-22A relay for 2 wire control circuitry or without for 3 wire control circuitry. The gate is locked into the clear position by an electromagnetic brake. If the power fails, the gate arm drops to the horizontal.

Masts

Masts are constructed of aluminum for long life and easy handling. The rust and corrosion resistant U S & S aluminum construction means minimum maintenance. They are available in either 4" or 5" diameters.

Pinnacle or Bell

Select either the standard aluminum mast pinnacle or the grade crossing bell. The bell is constructed of aluminum with a steel gong. It provides extra warning for pedestrians.

Junction Box Base

The aluminum junction box base, used to support the mast, contains 24 AAR terminals for terminating underground cable and for making other circuit connections. The base is designed and manufactured to provide long service life with minimal maintenance.

JUNCTION BOX BASES FOR 4-AND 5-INCH MASTS

U S & S junction box bases are constructed of aluminum for easy handling, long life, and minimum maintenance. They provide for terminating leads at the mast base. These junction box bases facilitate installation and maintenance.

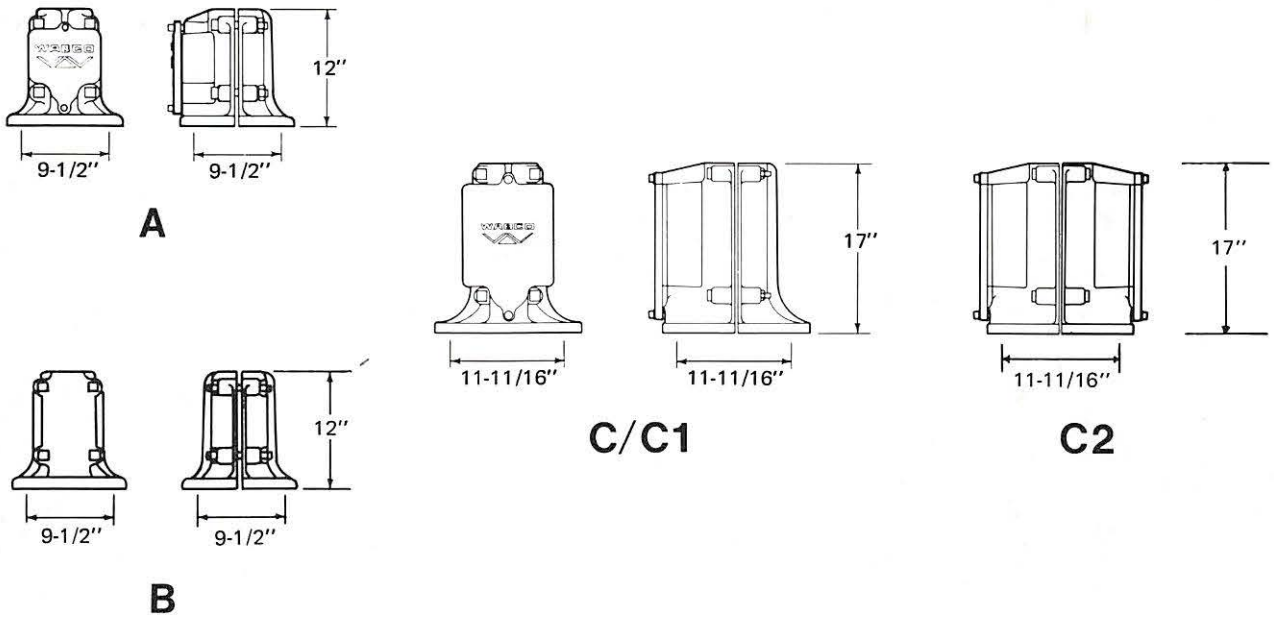

REF.	PART NO.	MAST DIA.	FDN. BOLT SPACING	BASE HEIGHT	NO. TERM.	NOTES
A	J705049-0201	4"	9-1/2 "	12"	12	Not For Use With Gates
B	J705049-0203	4"	9-1/2"	12"	None	Plain Clamp Base
C	J705049-0602	4"	11-11/16"	17"	24	
C1	J705049-0801	5"	11-11/16"	17"	24	
C2	J705049-0901	5"	11-11/16"	17"	48	

For FOUNDATION BOLTS see RSE-10F1.

WABCO

GRADE CROSSING SIGNS

U S & S grade crossing warning signs are made of aluminum and include all hardware necessary for mounting. Signs can be ordered in engineering grade Scotch-Lite® or Hi-Intensity reflex-reflection. U S & S signs conform to AAR requirements.

"RAILROAD CROSSING" SIGN

All aluminum construction with black lettering and includes mounting hardware.

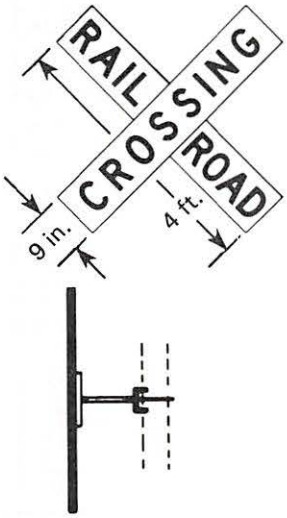

STANDARD

PART NO.	MAST SIZE	BACKGROUND
X392931-001	4"	Engineering Grade
X392931-007	4"	Hi-Intensity
X392931-002	5"	Engineering Grade
X392931-008	5"	Hi-Intensity
X392931-005	10" (Pipe Mast)	Engineering Grade
X392931-009	10" (Pipe Mast)	Hi-Intensity
X451506-0711	10/11" (Tapered Mast)	Engineering Grade
X451506-0712	10/11" (Tapered Mast)	Hi-Intensity

WITH STAND-OFF for Wooden Gate Arms

PART NO.	MAST SIZE	BACKGROUND
X438002-002	4"/5"	Engineering Grade
X438002-003	4"/5"	Hi-Intensity

"TRACKS" SIGN

Specify number required. All aluminum construction with black lettering and includes mounting hardware.

STANDARD

PART NO.	MAST SIZE	BACKGROUND
X392929-001	4"	Engineering Grade
X392929-005	4"	Hi-Intensity
X392929-002	5"	Engineering Grade
X392929-006	5"	Hi-Intensity
X392929-004	10" (Pipe Mast)	Engineering Grade
X392929-007	10" (Pipe Mast)	Hi-Intensity
X451506-0714	10/11" (Tapered Mast)	Engineering Grade
X451506-0715	10/11" (Tapered Mast)	Hi-Intensity

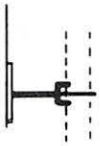

WITH STAND-OFF for Wooden Gate Arms

PART NO.	MAST SIZE	BACKGROUND
X437997	4"/5"	Engineering Grade
X437997-001	4"/5"	Hi-Intensity

"STOP ON RED SIGNAL" SIGN

All aluminum construction with black background. Includes mounting hardware.

STANDARD

PART NO.	MAST SIZE	LETTERING
X392930-001	4"	Engineering Grade
X392930-005	4"	Hi-Intensity
X392930-002	5" } Not For Use With Gate Arms	Engineering Grade
X392930-006	5" } Not For Use With Gate Arms	Hi-Intensity
X392930-004	10" (Pipe Mast)	Engineering Grade
X392930-007	10" (Pipe Mast)	Hi-Intensity
X451506-0720	10/11" (Tapered Mast)	Engineering Grade
X451506-0721	10/11" (Tapered Mast)	Hi-Intensity

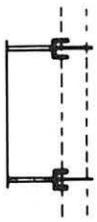

WITH STAND-OFF for Gate Arms

PART NO.	MAST SIZE	LETTERING
X438077	4"/5"	Engineering Grade
X438007-001	4"/5"	Hi-Intensity

STAND-OFF BRACKETS (Includes hardware.)

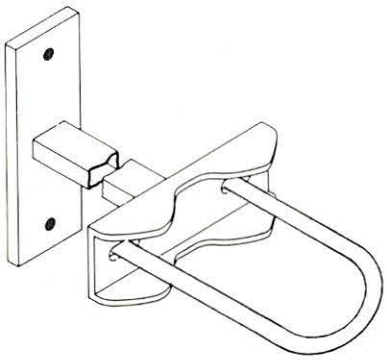

4"/5" MAST

PART NO.	SIGN
N438004-001	"Railroad Crossing"
N437999	"Tracks"
N438078	"Stop On Red Signal"

10"/11" MAST

PART NO.	SIGN
X451506-0710	"Railroad Crossing"
X451506-0713	"Tracks"
X451506-0719	"Stop On Red Signal"

WABCO

BA-10 DC ALUMINUM GRADE CROSSING BELL

The U S & S bell provides added warning for pedestrians at grade crossings. The bell is constructed of aluminum with a steel gong. It operates on 10 VDC. Designed for 5" masts, it also is available with an adapter for 4" masts.

For Detail Parts and Additional Information Refer to Service Manual 6094.

GRADE CROSSING BELL

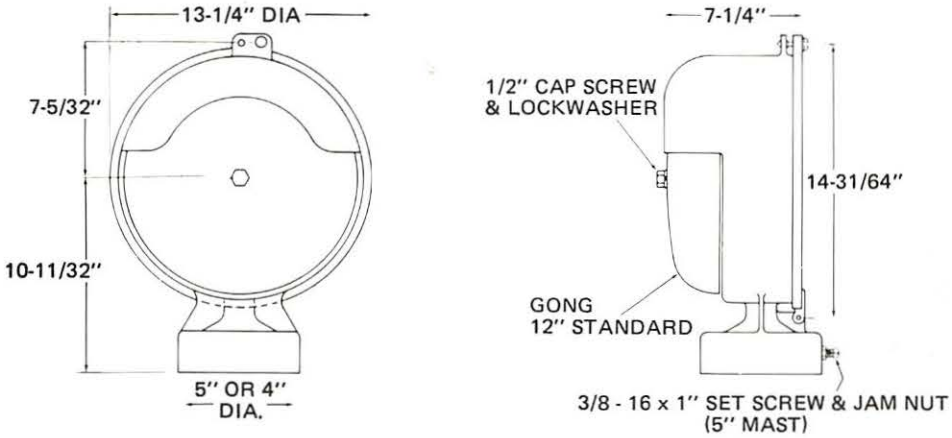

PART NO.	MAST SIZE	DESCRIPTION
N451542-0101	5"	Model BA-10 DC
X451542-0102	4"	With Adapter and Set Screw

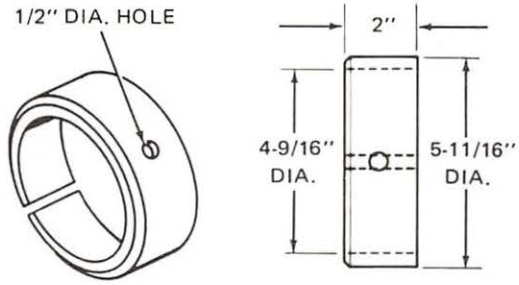

BELL ADAPTER

PART NO.	DESCRIPTION
J793026	Adapter for 4" Mast
J050578	Screw, Set, 3/8 - 16 x 1 1/2"

NOTE: WHEN THE ADAPTER IS USED THE 3/8" SET SCREW WILL BE LONGER THAN THAT USED FOR THE 5" MAST.

FLASHING LIGHT ASSEMBLIES

US&S flashing light assemblies consist of a XA-120 junction box crossarm, HC-100 8-3/8" diameter or HC-120A 12" diameter light units, and mounting hardware.

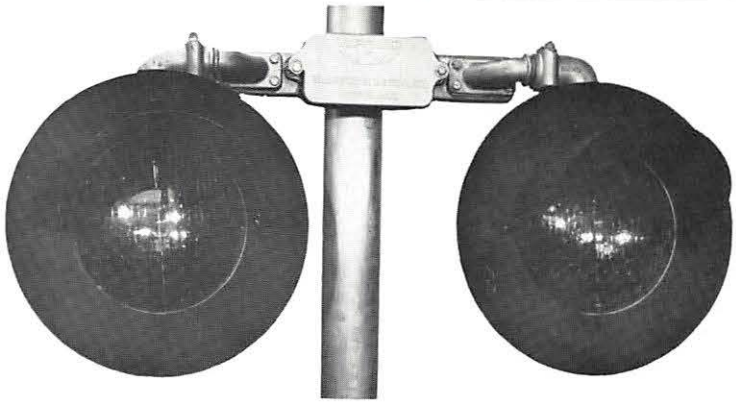

DESCRIPTION

The XA-120 crossarms are manufactured from aluminum for light weight, long service life and minimal maintenance. They permit the azimuth and range of each light unit to be adjusted independently.

The aluminum HC-100 and HC-120A light units include tough, shatter-resistant Lexan® roundels that are available with different light beam patterns as explained under "BEAM SPREAD AND DEFLECTION" in the next column.

In addition to the standard 20" background, the HC-120A light units are also available with the larger 24" diameter background. The light assemblies that include 24" background are identified in the tabulations by an asterisk (*) immediately to the right of the part number.

The light assemblies are available in 1-way and 2-way configurations for flashing light only, cantilever applications, and for flashing light/gate combinations that include aluminum, fiberglass or wooden gate arms.

Five different lamps can be ordered for use with these light assemblies. Descriptions, part numbers and characteristics of these lamps are listed on page 4 of this catalog section.

AZIMUTH AND RANGE ADJUSTMENT

The azimuth and range of the light units that are part of the flashing light assemblies presented in this section can be adjusted independently as shown in Figures 1 and 2 on page 2.

® Lexan is a registered trademark of the General Electric Company

As the light units are rotated to the maximum horizontal position of 35°, the distance D, figures 1-A and 2-A, between their center points decreases. In figures 1-A and 2-A, the center-to-center distance, D1, is less than distance D because the center points of the lights draw closer together as the 35° limit is approached.

The range of the light units can be adjusted as required to suit field conditions. (See Figures 1 and 2)

BEAM SPREAD AND DEFLECTION

Horizontal spread and downward deflection of the signal beam is measured as illustrated in Figure 3, page 2. Note that the reference for both measurements is the signal sighting plane which can vary with the position of the signal unit on the crossarm.

The standard beam pattern for mast-mounted light assemblies in conventional applications is 30° of horizontal spread and 15° of downward deflection. A 20° horizontal spread and a 32° downward deflection pattern is required for light assemblies mounted on cantilever arms. A beam pattern of 70° horizontal spread and 0° downward deflection is necessary where light dispersion over a wide horizontal angle may be desired as, for example, in the case of the back lights in a 2-way light assembly configuration.

Individual roundels, light units, and junction box crossarms can also be ordered separately if necessary. Please refer to Catalog Section RSE-10B7 for descriptions and part numbers of roundels along with HC-100 and HC-120A light units. Catalog Section RSE-10B6 includes part numbers and descriptions of XA-120 junction box crossarms.

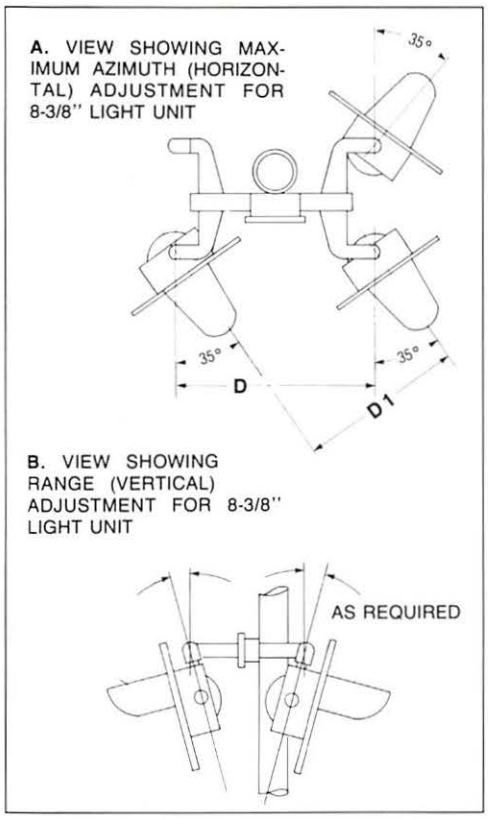

FIG. 1 - AZIMUTH AND RANGE ADJUSTMENT FOR HC-100 ASSEMBLIES

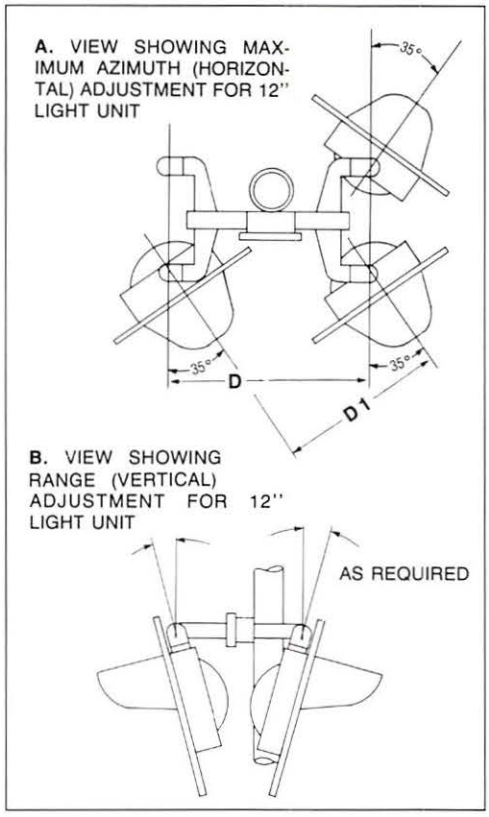

FIG. 2 - AZIMUTH AND RANGE ADJUSTMENT FOR HC120A ASSEMBLIES

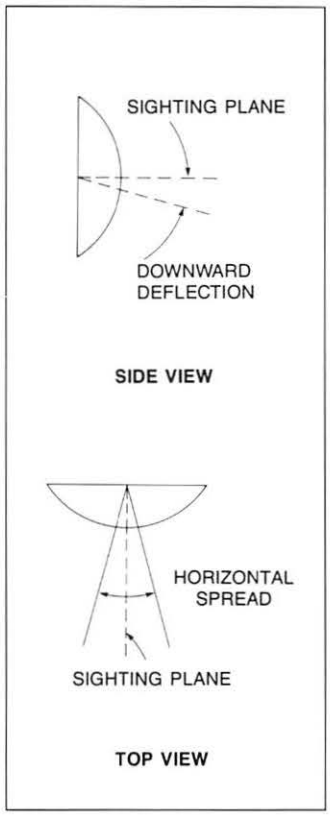

FIG. 3 - BEAM AND SPREAD DEFLECTION

1-WAY FLASHING LIGHT ASSEMBLIES

(Order lamps separately. See page 4 of this section.)

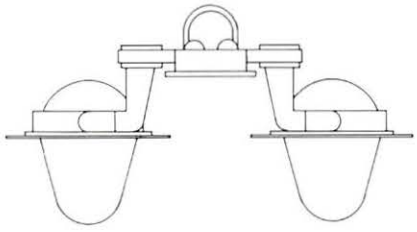

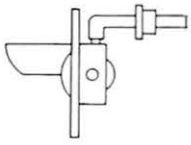

HC-120A (12")

PART NO.	MAST DIAMETER	ROUNDEL SPREAD/DEFLECTION
X451506-0103	4"	30°/15°
X451506-0107	4"	20°/32°
X451506-0303	5"	30°/15°
X451506-0309*	5"	30°/15°
X451506-0313	5"	70°/0°
X451506-0717	**	20°/32°
X451506-0705	10"/11"	30°/15°

HC-100 (8-3/8")

PART NO.	MAST DIAMETER	ROUNDEL SPREAD/DEFLECTION
X451506-0101	4"	30°/15°
X451506-0105	4"	20°/32°
X451506-0106	4"	20°/10°
X451506-0718	**	20°/32°
X451506-0301	5"	30°/15°
X451506-0302	5"	20°/10°
X451506-0706	10"/11"	30°/15°

** HC-120A LIGHTS WITH 24" BACKGROUNDS*
***FOR 4" DIA. TUBING ON CANTILEVER ARM*

2-WAY (BACK TO BACK) FLASHING LIGHT ASSEMBLIES

(Order lamps separately. See page 4 of this section.)

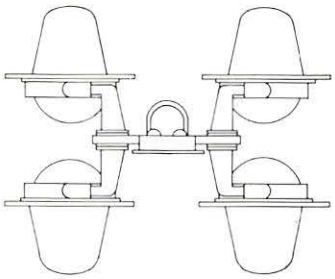

HC-120A (12'')

PART NO.	MAST DIAMETER	ROUNDEL SPREAD/DEFLECTION
X451506-0104	4''	30°/15°
X451506-0110	4''	20°/32°
X451506-0306	5''	30°/15°
X451506-0310*	5''	30°/15°

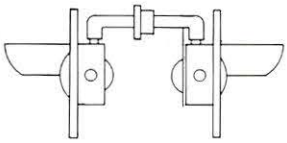

HC-100 (8-3/8'')

PART NO.	MAST DIAMETER	ROUNDEL SPREAD/DEFLECTION
X451506-0102	4''	30°/15°
X451506-0108	4''	20°/32°
X451506-0109	4''	20°/10°
X451506-0304	5''	30°/15°
X451506-0305	5''	20°/10°

**HC-120A LIGHTS WITH 24'' BACKGROUNDS*

2-WAY (BACK TO BACK) FLASHING LIGHT ASSEMBLIES

For use with aluminum/fiberglass gatearms and cantilevers.

(Order lamps separately. See page 4 of this section.)

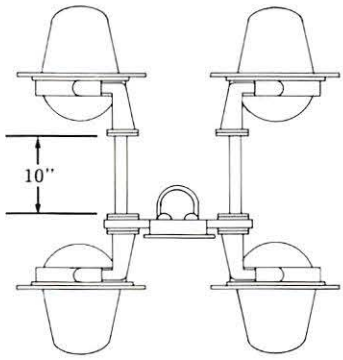

HC-120A (12'')

PART NO.	MAST DIAMETER	ROUNDEL SPREAD/DEFLECTION
X411506-0112	4''	30°/15°
X451506-0308	5''	30°/15°
X451506-0311*	5''	30°/15°
X451506-0312	5''	30°/15°FRONT 70°/0°BACK
X451506-0314	5''	70°/0°
X451506-0702	10''/11''	30°/15°
X451506-0708	**	20°/32°

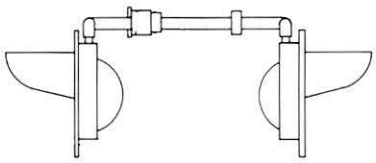

HC-100 (8-3/8'')

PART NO.	MAST DIAMETER	ROUNDEL SPREAD/DEFLECTION
X451506-0111	4''	30°/15°
X451506-0709	*	20°/32°
X451506-0307	5''	30°/15°
X451506-0703	10''/11''	30°/15°

** HC-120A LIGHTS WITH 24'' BACKGROUNDS*

***FOR 4'' DIA. TUBING ON CANTILEVER ARM*

1-WAY AND 2-WAY FLASHING LIGHT ASSEMBLIES

For use with wood gate arms.

(Order lamps separately. See lamp listing below.)

1-WAY

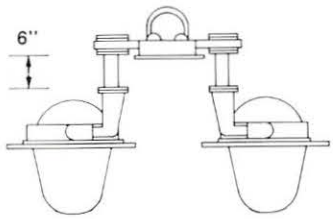

HC-120A (12")

PART NO.	MAST DIAMETER	ROUNDEL SPREAD/DEFLECTION
X411506-0803	5"	30°/15°
X451506-0814*	5"	70°/0°

HC-120A LIGHT WITH 24" BACKGROUNDS

HC-100 (8-3/8")

PART NO.	MAST DIAMETER	ROUNDEL SPREAD/DEFLECTION
X451506-0809	5"	30°/15°

2-WAY (BACK TO BACK)

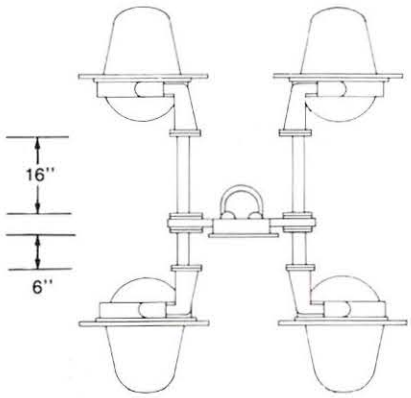

HC-120A (12")

PART NO.	MAST DIAMETER	ROUNDEL SPREAD/DEFLECTION
X451506-0802	5"	30°/15°
X451506-0813*	5"	30°/15°

HC-120A LIGHT WITH 24" BACKGROUNDS

HC-100 (8-3/8")

PART NO.	MAST DIAMETER	ROUNDEL SPREAD/DEFLECTION
X451506-0808	5"	30°/15°

LAMPS

Lamps are not included with flashing light assemblies and must be ordered separately.

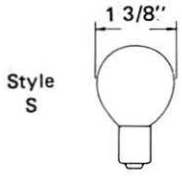

PART NUMBER	VOLTS	WATTS	BULB STYLE	FILAMENT TYPE	BASE	LIFE HOURS
J071463	10	18W	S-11	C-2V	SC	1000
J071574	10	25W	S-11	CC-6	SC	1000
J714283	10	16W	QI	C-6	SC	2500
J714284	10	36W	QI	C-8	SC	2500
J714054	125	25W	G-16½	C-5	SC	1000

QI — QUARTZ IODINE LAMPS
SC — SINGLE CONTACT BASE

RSE-10B5c

XA-120 JUNCTION BOX CROSSARMS

U S & S's Junction Box Crossarms offer many different configurations to provide for a wide range of applications. The crossarms accept the complete range of flashing signal lights. They are constructed of aluminum for long life, minimum maintenance, and ease of installation. They contain AAR terminals complete with terminal nuts and washers. The removable end plate allows for easy access for stringing wire. The fittings permit independent horizontal (azimuth) and vertical (range) adjustment of each signal unit.

XA-120 JUNCTION BOX CROSSARM

ONE-WAY CROSSARM ASSEMBLIES

PART NO.	MAST SIZE	DESCRIPTION
N451415-0201	4"	Without mounting hardware
X451415-0203	4"	With mounting hardware
X451506-0716	*	With mounting hardware
X451415-0205	5"	With mounting hardware
X451506-0704	10"/11"	With mounting hardware

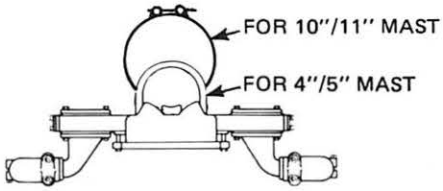

TWO-WAY CROSSARM ASSEMBLIES

PART NO.	MAST SIZE	DESCRIPTION
N451415-0202	4"	Without mounting hardware
X451415-0204	4"	With mounting hardware
X451506-0707	*	With mounting hardware
X451415-0206	5"	With mounting hardware

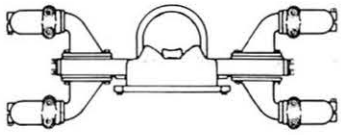

*FOR 4" TUBING ON CANTILEVER ARM

PART NO.	DESCRIPTION
J033183	Adjustable Strap for 10"/11" Mast

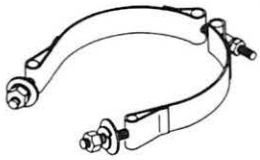

XA-120 JUNCTION BOX CROSSARM WITH EXTENSION ARMS FOR TWO-WAY SIGNAL ASSEMBLIES WITH CANTILEVERS AND MODEL 75 CROSSING GATE

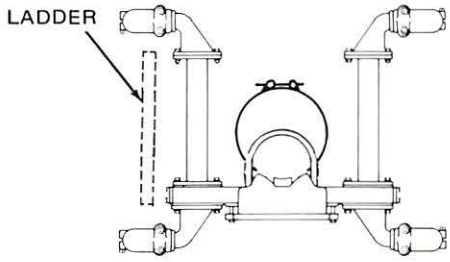

PART NO.	MAST SIZE	DESCRIPTION
N451415-0401	4″	Without mounting hardware
X451415-0403	4″	With mounting hardware
X451415-0404	5″	With mounting hardware
X451506-0701	10″/11″	With mounting hardware

ONE-WAY CROSSARM ASSEMBLIES FOR GATES WITH WOOD ARMS

PART NO.	MAST SIZE	EXTENSION ARM X DIM.
X451415-0605	5″	6″
X451415-0603	5″	8″
X451415-0602	5″	10″

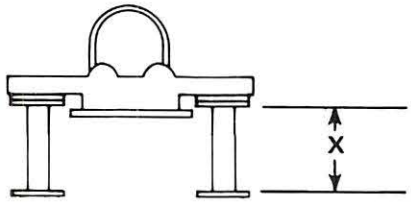

TWO-WAY CROSSARM ASSEMBLIES FOR GATES WITH WOOD ARMS

PART NO.	MAST SIZE	EXTENSION ARM X DIM.	EXTENSION ARM Y DIM.
X451415-0604	5″	13″	6″
X451415-0601	5″	16″	8″

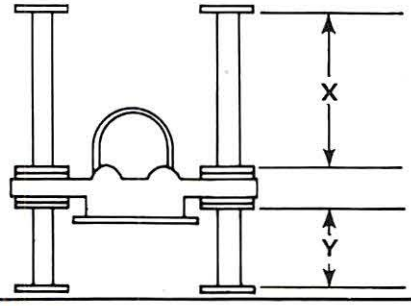

WABCO

SIGNAL LIGHT UNITS
HC-120A & HC-100

HC-120A SIGNAL LIGHT UNITS

U S & S's HC-120A Signal Light Unit with 12" roundel provides 43% more illuminated area than signal light units with 8-3/8" roundel. The HC-120A uses a *full* 12" deep dish, glass parabolic reflector, center mounted for easy replacement and to prevent shock and damage. A brass plated socket is provided for the bulb. The socket mounting allows for X, Y, Z axis lamp location adjustment. Voltage readings can be taken at the bulb for battery adjustment.

Constructed of aluminum with stainless steel hardware, the unit is designed for easy maintenance. The cover provides quick and easy access to the interior; cover bolts accept AAR terminal wrenches. To resist breaking and damage, the roundel and side windows are made of a polycarbonate material. The unit has a standard 1-1/4" straight pipe thread suitable for connecting the light unit to all crossarms.

The signal light unit, including the socket, has 3000 volt insulation from ground. The socket accepts 18 or 25 watt, 10 volt S-11 bulbs; 25 watt, 110 volt G-16-1/2 bulbs; or Quartz-Iodide bulbs.

COMPLETE ASSEMBLY -Includes 12" red Lexan® roundel

PART NO.	DEFLECTION	DESCRIPTION
N451497-0301	20°/32°	Without hood and background
X451497-0302	20°/32°	With hood and background
N451497-0303	30°/15°	Without hood and background
X451497-0304	30°/15°	With hood and background

LAMPS FOR HC-120A AND HC-100

PART NO.	TYPE	VOLTS	WATTS
J071463	S.C.B.C	10	18
J071574	S.C.B.C.	10	25
J714054	S C B.C.	110	25
J714283	Q.I.	10	16
J714284	Q.I.	10	36

ROUNDEL - Red Lexan®

PART NO.	DEFLECTION
J532136	20°/32°
J532140	30°/15°
J532141	70°/0°

20" DIA. BACKGROUND

PART NO. M451498-2401

24" DIA. BACKGROUND

PART NO. M451498-2402

HOOD

PART NO. M451498-2501

REFLECTOR

PART NO. J532137-0201

®LEXAN is a trade name of the General Electric Company

HC-100 SIGNAL LIGHT UNITS

The HC-100 Signal Light Unit with 8-3/8" roundel meets the needs of modern high speed highways. This rugged unit, designed for easy maintenance and long trouble-free service, is constructed of light weight aluminum. The optical system, with a 3-axis adjustable lamp combined with uniquely designed roundels, provide superior light indications; exceeding AAR light output specifications. Roundels of red Lexan and plexiglass are offered in various spread combinations, the standard being 30°/15°. For special applications, a yellow glass roundel is available. Lamps used with the HC-100 unit are the same as those used for the HC-120A. Refer to the tabulation on page 1.

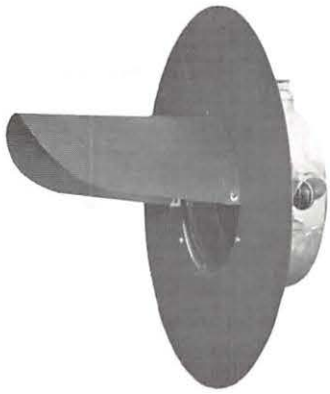

PART NO.	DESCRIPTION
X390731-001	HC-100 SIGNAL LIGHT UNIT complete with hood and background, 30°/15° deflection

HOOD

PART NO.	M390714

BACKGROUND 20"

PART NO.	M390713

REFLECTOR

PART NO.	N293215

PART NO.	DEFLECTION	TYPE
J530119	30°/15°	Red Lexen®
J530117	70°/0°	Red Lexen
J532135	20°/10°	Red Lexen with 2" "Hot Spot"
J532119	20°/32°	Red Plexiglass
J530120	30°/15°	Yellow Glass

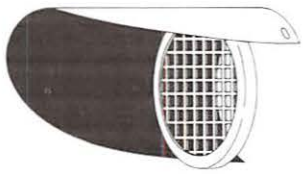

ROUNDEL GUARD

PART NO.	R396874

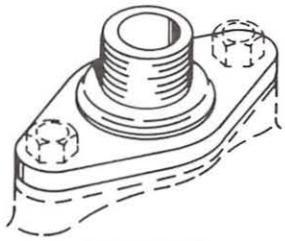

ADAPTER

PART NO.	M451416-0104

LIGHT UNITS

Does not include hood, background, adapter, roundel guard, or lamp.

PART NO.	DEFLECTION	ROUNDEL
N394817	30°/15°	Red Lexan®
N390729	70°/0°	Red Lexan
N437283	20°/10°	Red Lexan with 2" Hot Spot "
N390730	20°/32°	Red Plexiglass
N394830	30°/15°	Yellow Glass

GATE MECHANISM AND COMPONENTS
MODEL 75

Individual parts of the Model 75 Crossing Gate are identified by letters on the illustration. Gate Arm Components are in RSE-10B9. Adapter Brackets are in RSE-10B10.

For Detail Parts and Additional Information, Refer to Service Manual 6043

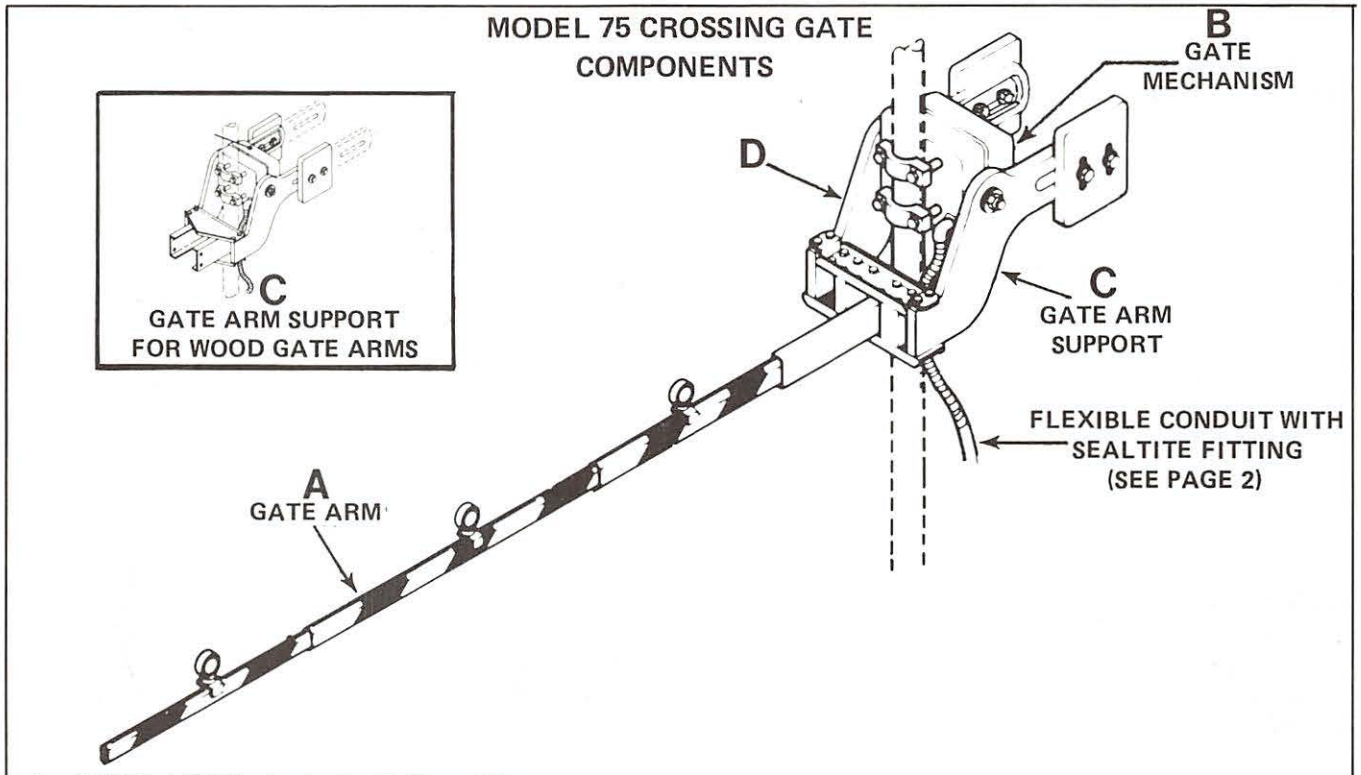

A - GATE ARMS - Includes 2 Shear Pins

ALUMINUM PART NO.	SCOTCHLITE® REFLECTIVE STRIPING	GATE ARM LIGHTS	FIBERGLASS PART NO.	SCOTCHLITE® REFLECTIVE STRIPING	GATE ARM LIGHTS
17' - 27' ARMS			17' - 27' ARMS		
N451070-0201	Engineering Grade	4"	N451484-5707	Engineering Grade	4"
N451484-5703	Engineering Grade	7"	N451484-5709	Engineering Grade	7"
N451070-0211	Hi-Intensity	4"	N451484-5708	Hi-Intensity	4"
N451484-5704	Hi-Intensity	7"	N451484-5710	Hi-Intensity	7"
28' - 33' ARMS			28' - 33' ARMS		
N451070-0207	Engineering Grade	4"	N451484-5719	Engineering Grade	4"
N451484-5501	Engineering Grade	7"	N451484-5721	Engineering Grade	7"
N451070-0213	Hi-Intensity	4"	N451484-5720	Hi-Intensity	4"
N451484-5716	Hi-Intensity	7"	N451484-5722	Hi-Intensity	7"
34' - 40' ARMS			34' - 40' ARMS		
N451484-3601	Engineering Grade	4"	N451484-5731	Engineering Grade	4"
N451484-5727	Engineering Grade	7"	N451484-5733	Engineering Grade	7"
N451484-3604	Hi-Intensity	4"	N451484-5732	Hi-Intensity	4"
N451484-5728	Hi-Intensity	7"	N451484-5734	Hi-Intensity	7"

B - GATE MECHANISM - Includes mast clamps, bolts, washers, and 1½" standard connector for flexible conduit.

PART NO.	DESCRIPTION
N451483-0101	WITH DN-22A GATE CONTROL RELAY for 2-wire control circuit
N451483-0102	WITHOUT DN-22A RELAY for 3-wire control circuit.

C - GATE SUPPORT - Includes lateral adjustment bracket.

PART NO.	FOR GATE ARM LGTH OF	COUNTER-WEIGHT
X451484-2701	17' - 27'	222 lbs.
X451484-2702	28' - 33'	323 lbs.
X451484-2708	34' - 40'	496 lbs.

C - SUPPORT FOR WOOD GATE ARMS

PART NO.	FOR GATE ARM LGTH OF	COUNTERWEIGHT
X451484-2703	14' - 18'	183 lbs.
X451484-2704	19' - 24'	280 lbs.
X451484-2705	25' - 30'	496 lbs.
X451484-2706 (includes arm extension)	31' - 38'	496 lbs.
X451484-2709 (includes arm extension)	39' - 44'	496 lbs.

D - GATE MECHANISM WITH GATE ARM SUPPORT AND COUNTERWEIGHTS - Includes mast clamps, bolts, washers, and 1½" standard connector for flexible conduit.

PART NO.	FOR GATE ARM LGTH OF	DESCRIPTION
X451483-0601	17' - 27'	With Relay (2 wire circuit)
X451483-0602	17' - 27'	Without Relay (3 wire circuit)
X451483-0603	28' - 33'	With Relay (2wire circuit)
X451483-0604	28' - 33'	Without Relay (3 wire circuit)
X451483-0605	34' - 40'	With Relay (2 wire circuit)
X451483-0606	34' - 40'	Without Relay (3 wire circuit)

OPTIONAL HARDWARE FOR ALUMINUM, FIBERGLASS, AND WOOD ARMS

PIVOT CLAMP ASSEMBLY - Allows gate arm in horizontal position to be be swung from highway during maintenance procedures.

PART NO.	DESCRIPTION
X451483-0638	COMPLETE ASSEMBLY with 2 clamps, 2 bolts, 2 nuts, and 2 washers
M192519-003	PIVOT CLAMP separately (2 required)
J046752	BOLT separately (2 required)
J480210-0157	NUT separately (2 required)
J475138-0119	WASHER separately (2 required)

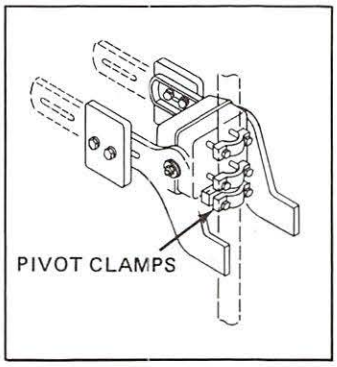

FLEXIBLE CONDUIT WITH SEALTITE FITTING (CONDUIT ASSY.)

PART NO.	DESCRIPTION
X451483-0639	FLEXIBLE CONDUIT WITH SEALTITE FITTING, 1 1/2" x 34" long

WABCO

ALUMINUM AND FIBERGLASS CROSSING GATE ARMS,

U S & S's Aluminum and Fiberglass Crossing Gate Arms are the answer to the problem of the fragile wooden crossing gate arms. These arms can be used in new installations or can be adapted to existing gate mechanisms. Utilizing a telescoping feature, the gate arms can be extended in lengths from 17 to 27 feet, 28 to 33 feet, and 34 to 40 feet, allowing custom fitting to each crossing. The gate arm is easily mounted to adapter brackets equipped with a break-away feature, which allow mating with other types of gate mechanisms.

The gate arms bolt to the existing gate mechanism by means of a strong steel adapter bracket (see RSE-10B10). Included with the gate arms is a wire harness with plug, which is used to connect the three weatherproof lights on the arm to the light circuit. For ease of installation and servicing, a cable connector is installed between the 1st and 2nd arm sections.

The gate arms are made of aluminum or fiberglass and constructed in three telescoping sections. Each section is equipped with a weatherproof light in a choice of 4" or 7". The sections are bolted together and form an arm which mounts in a steel adapter and is retained with a shear pin. This arrangement will minimize damage to the arm and prevent damaging the operating mechanism if the arm is struck by a vehicle. The gate arm is furnished with 16-inch diagonal red and white stripes of Engineering Grade or Hi-Intensity Scotch-Lite® for improved reflective visibility.

FEATURES

- Mounts on existing equipment.
- Reduces inventory and installation problems.
- A size to suit most applications.
- Tough aluminum or fiberglass arms stand straight, no warping — proven design.
- Shear pin breaks on impact for minimum arm damage.
- Reflective striping on gate arm.
- No painting required.
- Gate lights are plug connected, easily replaced, weatherproof.
- Complies with AAR specifications and state requirements.

SPECIFICATIONS

Gate Arm

Weight (approx.):

27 ft. Gate Arm	30 lbs.
33 ft. Gate Arm	40 lbs.
40 ft. Gate Arm	50 lbs.

Arm Length (adjustable):

27 ft. Gate Arm	17 to 27 ft.
33 ft. Gate Arm	28 to 33 ft.
40 ft. Gate Arm	34 to 40 ft.

CROSSING GATE ARM ASSEMBLIES – WITH THREE SIGNAL LIGHTS

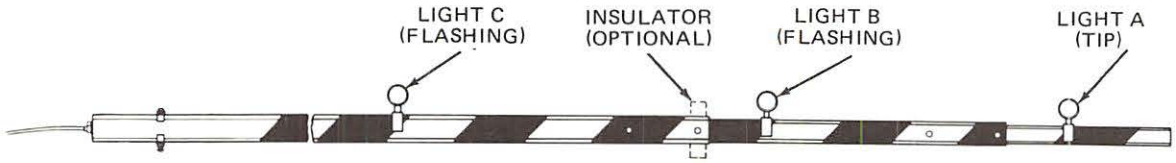

ALUMINUM - Includes shear pins and wiring harness

PART NO.	GATE ARM LENGTH	SCOTCHLITE REFLECTIVE STRIPING	SIGNAL LIGHTS
N451070-0201	17′ - 27′	Eng. Grade	4″
N451484-5703	17′ - 27′	Eng. Grade	7″
N451070-0211	17′ - 27′	Hi-Intensity	4″
N451484-5704	17′ - 27′	Hi-Intensity	7″
N451070-0207	28′ - 33′	Eng. Grade	4″
N451484-5501	28′ - 33′	Eng. Grade	7″
N451070-0213	28′ - 33′	Hi-Intensity	4″
N451484-5716	28′ - 33′	Hi-Intensity	7″
N451484-3601	34′ - 40′	Eng. Grade	4″
N451484-5727	34′ - 40′	Eng. Grade	7″
N451484-3604	34′ - 40′	Hi-Intensity	4″
N451484-5728	34′ - 40′	Hi-Intensity	7″

FIBERGLASS - Includes shear pins and wiring harness

PART NO.	GATE ARM LENGTH	SCOTCHLITE REFLECTIVE STRIPING	SIGNAL LIGHTS
N451484-5707	17′ - 27′	Eng. Grade	4″
N451484-5709	17′ - 27′	Eng. Grade	7″
N451484-5708	17′ - 27	Hi-Intensity	4″
N451484-5710	17′ - 27′	Hi-Intensity	7″
N451484-5719	28′ - 33′	Eng. Grade	4″
N451484-5721	28′ - 33′	Eng. Grade	7″
N451484-5720	28′ - 33′	Hi-Intensity	4″
N451484-5722	28′ - 33′	Hi-Intensity	7″
N451484-5731	34′ - 40′	Eng. Grade	4″
N451484-5733	34′ - 40′	Eng. Grade	7″
N451484-5732	34′ - 40′	Hi-Intensity	4″
N451484-5734	34′ - 40′	Hi-Intensity	7″

CROSSING GATE ARM ASSEMBLIES – WITHOUT SIGNAL LIGHTS

ALUMINUM

PART NO.	GATE ARM LENGTH	SCOTCHLITE REFLECTIVE STRIPING
N451070-0202	17′ - 27′	Eng. Grade
N451070-0212	17′ - 27′	Hi-Intensity
N451070-0210	28′ - 33′	Eng. Grade
N451070-0214	28′ - 33′	Hi-Intensity
N451484-3603	34′ - 40′	Eng. Grade
N451484-3605	34′ - 40′	Hi-Intensity

FIBERGLASS

PART NO.	GATE ARM LENGTH	SCOTCHLITE REFLECTIVE STRIPING
N451484-5711	17′ - 27′	Eng. Grade
N451484-5712	17′ - 27′	Hi-Intensity
N451484-5723	28′ - 33′	Eng. Grade
N451484-5724	28′ - 33′	Hi-Intensity
N451484-5735	34′ - 40′	Eng. Grade
N451484-5736	34′ - 40′	Hi-Intensity

CROSSING GATE ARM SECTIONS
(Repair Use Only)

1st SECTION – ALUMINUM *

PART NO.	FOR GATE ARMS	SCOTCHLITE REFLECTIVE STRIPING
N451071-3901	17′ - 27′	Eng. Grade
N451071-3904	17′ - 27′	Hi-Intensity
N451071-6203	28′ - 33′	Eng. Grade
N451071-6206	28′ - 33′	Hi-Intensity
N451484-4001	34′ - 40′	Eng. Grade
N451484-4002	34′ - 40′	Hi-Intensity

***1st section of fiberglass gate arms is aluminum**

2nd SECTION – ALUMINUM

PART NO.	FOR GATE ARMS	SCOTCHLITE REFLECTIVE STRIPING
N451071-3902	17′ - 27′ 28′ - 33	Eng. Grade
N451071-3905	17′ - 27′ 28′ - 33′	Hi-Intensity
N451484-4003	34′ - 40′	Eng. Grade
N451484-4004	34′ - 40′	Hi-Intensity

2nd SECTION – FIBERGLASS

PART NO.	FOR GATE ARMS	SCOTCHLITE REFLECTIVE STRIPING
N451484-5609	17′ - 27′ 28 - 33′	Eng. Grade
N451484-5610	17′ - 27′ 28′ - 33	Hi-Intensity
N451484-5613	34′ - 40′	Eng. Grade
N451484-5614	34′ - 40′	Hi-Intensity

3rd SECTION – ALUMINUM

PART NO.	FOR GATE ARMS	SCOTCHLITE REFLECTIVE STRIPING
N451071-3903	17′ - 27′ 28′ - 33′	Eng. Grade
N451071-3906	17′ - 27′ 28′ - 33′	Hi-Intensity
N451484-4005	34′ - 40′	Eng. Grade
N451484-4006	34′ - 40′	Hi-Intensity

3rd SECTION – FIBERGLASS

PART NO.	FOR GATE ARMS	SCOTCHLITE REFLECTIVE STRIPING
N451484-5617	17′ - 27′ 28′ - 33′	Eng. Grade
N451484-5618	17′ - 27′ 28′ - 33′	Hi-Intensity
N451484-5621	34′ - 40′	Eng. Grade
N451484-5622	34′ - 40′	Hi-Intensity

CROSSING GATE COMPONENTS

WIRING HARNESS

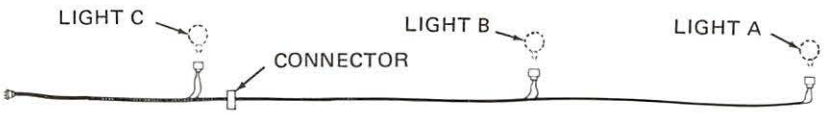

PART NO.	DESCRIPTION
N451071-3804	17'-27' Gate Arm
N451071-3806	28'-33' Gate Arm
N451071-3807	34'-40' Gate Arm

LAMP S.C.B.C. BASE

PART NO.	DESCRIPTION
J071463	10 volt, 18 watt
J071574	10 volt, 25 watt
J714054	110 volt, 25 watt

SIGNAL LIGHT ASSEMBLY

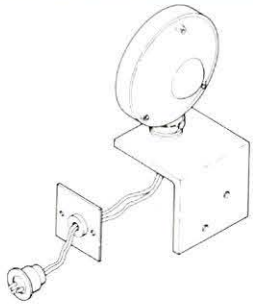

PART NO.	DESCRIPTION
N451071-3801	4" Lens
N451484-5401	7" Lens
J531485	4" Replacement Red Lens includes gasket and screws

SHEAR PIN ASSEMBLY

Includes Cotter Pin and Nuts

PART NO.	DESCRIPTION
X451071-4706	17'-27' Gate Arm
X451071-4709	28'-33' Gate Arm
X451071-4710	34'-40' Gate Arm
X451071-4713	*

SHEAR PIN ONLY

PART NO.	DESCRIPTION
R451071-4704	17'-27' Gate Arm
R451071-4705	28'-33' Gate Arm
R451071-4708	34'-40' Gate Arm
R451071-4712	*

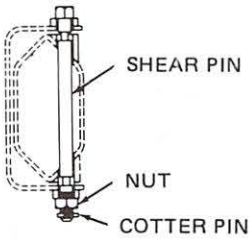

For applications where wind loads are greater then 50 m.p.h., shear pins of the next greatest gate arm length should be used i.e. a 17'-27' gate arm with a wind force over 50 m.p.h. needs the shear pin for a 28'-33' gate arm.

***Extra Heavy Duty Shear Pin for 40 ft. Gate Arms sustaining windloads in excess of 50 MPH.**

ADAPTER BRACKETS FOR CROSSING GATE ARMS

Adapter brackets are available for installing aluminum and fiberglass gate arms to gate mechanisms of other manufacturers. These easy-to-install brackets allow for quick and easy installation of the gate arm. The adapter brackets are ruggedly constructed and will provide years of service.

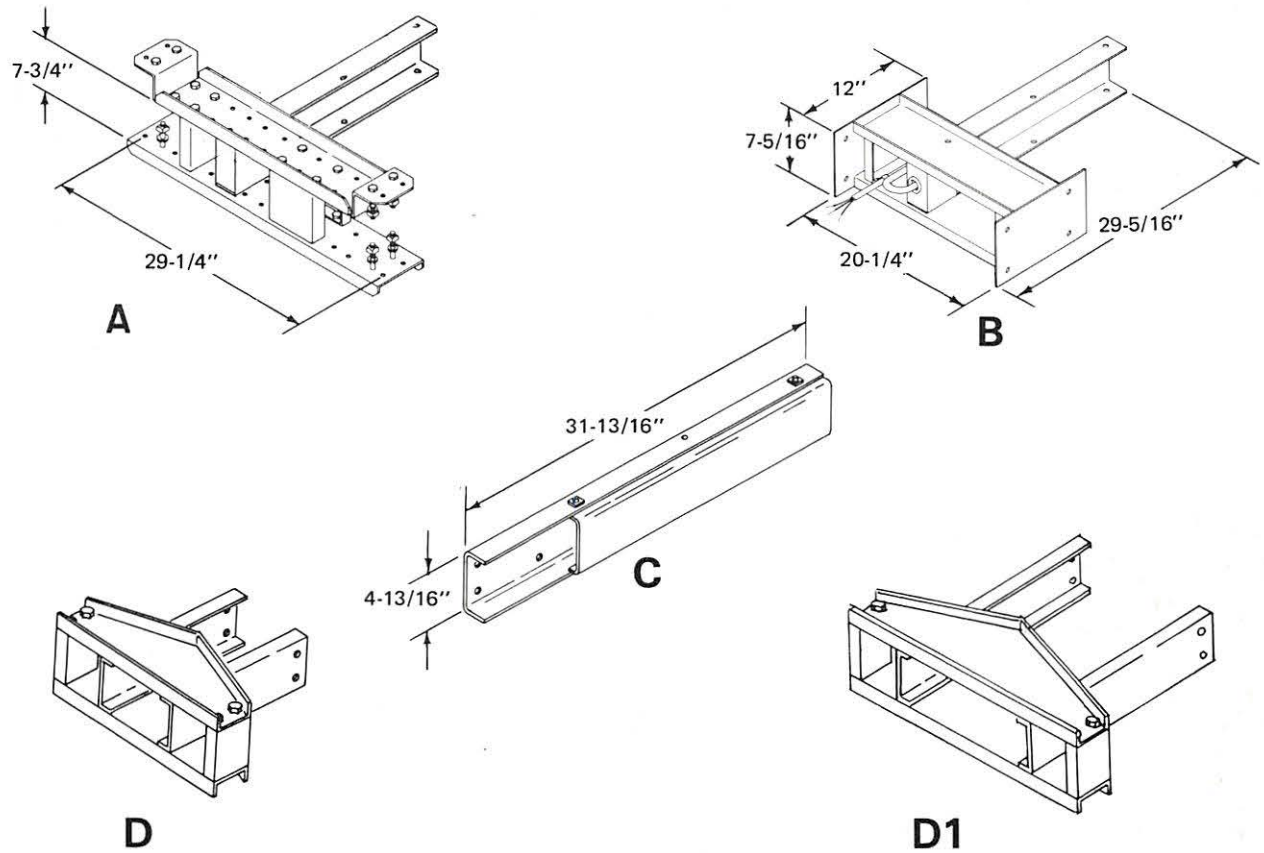

REF.	PART NO.	DESCRIPTION
A	N451484-1805	ADAPTER BRACKET, for Model 75 Gate Mechanism and for gates with Western Cullen mechanism 3564, 3566, 3567, 3568, 3590 and Safetran Model S. Includes mounting hardware and wire harness.
B	N451011-7401	ADAPTER BRACKET, for gates with Safetran (Griswold) pedestal gate mechanism. Includes mounting hardware and wire harness.
C	N451484-4202	ADAPTER BRACKET, for mounting U S & S's Aluminum Gate Arms to Safetran's pivot adapter.
D	N451484-3401	ADAPTER BRACKET, for wood gate arms 14' - 38'
D1	N451484-5002	ADAPTER BRACKET, for wood gate arms 39' - 44'

CROSSING SIGNAL & CANTILEVER FOUNDATIONS

The following pages illustrate precast and poured concrete foundations recommended for mounting US&S Cantilever Signals, Flasher Signals, and Flasher Signals with automatic gates.

Union Switch and Signal supplies mounting bolts and nuts for use with poured concrete foundations.

Precast foundations available from other sources.

TYPICAL CANTILEVER FOUNDATION

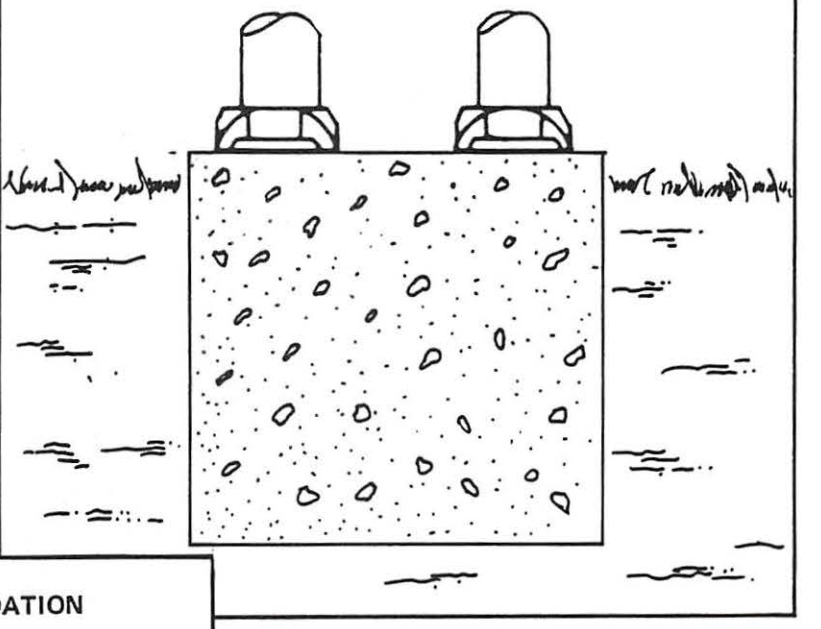

TYPICAL FLASHER SIGNAL FOUNDATION

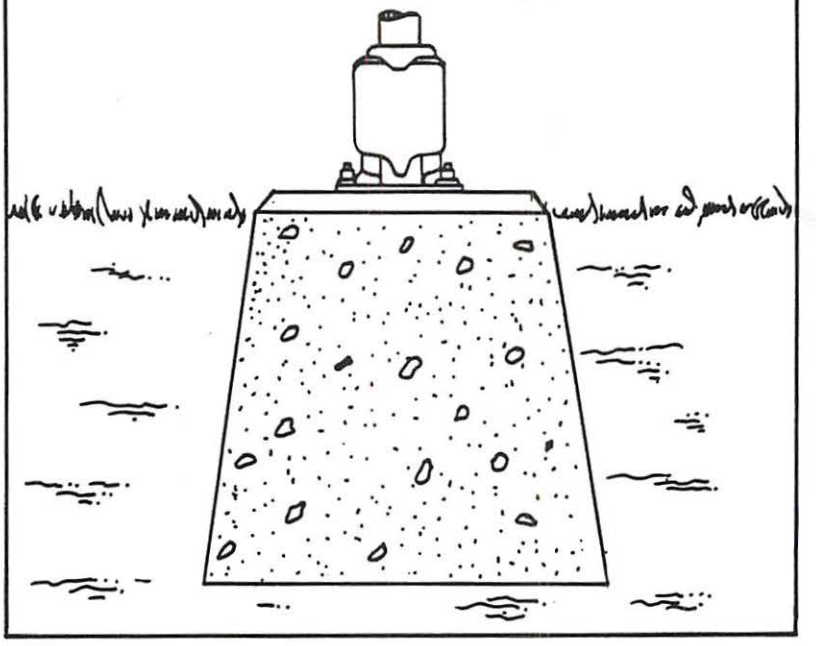

CONTENTS

Poured concrete foundations for CW Cantilever masts 2
Mounting bolts for poured concrete foundations 3
Poured concrete foundations for Flasher Signals 4
Poured concrete foundations for Flasher Signals with Automatic Gates 5
Precast concrete foundations for CW Cantilevers 6
Precast concrete foundations for Flasher Signals and Flasher Signals with Automatic Gates 7

PRINTED IN U.S.A.

UNION SWITCH & SIGNAL DIVISION
AMERICAN STANDARD INC. / SWISSVALE, PA 15218

RSE-10F1
9/80

POURED CONCRETE FOUNDATIONS FOR SINGLE OR DOUBLE CW CANTILEVERS

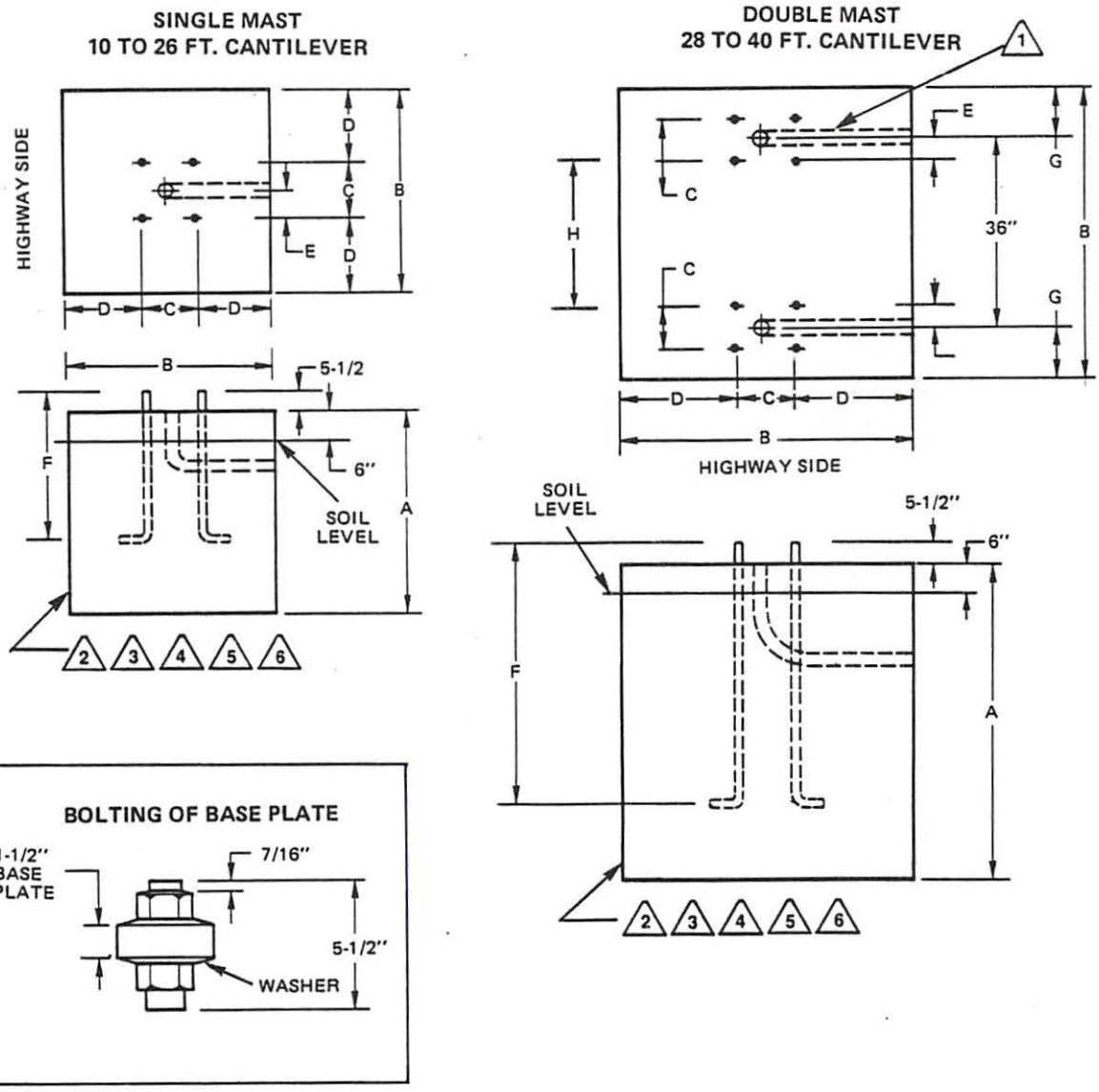

NOTES

1. If there are to be light units mounted on this mast, cable chase will be required to both masts.
2. Minimum soil bearing strength 3000 PSF is required.
3. A minimum of 6 inches of threads on end of achlor bolts is recommended. F = length of foundation bolt. (Ref. Page 3 for PT. # of bolts required.)
4. Place cable chase in field to suit conditions. (Chase openings centered in bolt group.)
5. Concrete mix ratio of 1-2-4, one part cement, two parts sand, & 4 parts stone.
6. Reinforcing bars to be placed into concrete according to good engineering practices.

POURED CONCRETE FOUNDATIONS FOR SINGLE OR DOUBLE CW CANTILEVERS

Recommended dimensions for poured concrete foundations for grade crossing cantilevers are shown below.

The following table is used for 19" bolt spacing and adaptor plate.

CANTILEVER ARM LENGTH	DIMENSIONS							
	A	B	C	D	E	F	G	H
10FT–20FT	72"	48"	19"	14-1/2"	9-1/2"	48"		
22FT–26FT	84"	48"	19"	14-1/2"	9-1/2"	60"		
28FT–40FT	84"	66"	19"	23-1/2"	9-1/2"	60"	15"	17"

The following table is used for 12-3/4" bolt spacing.

CANTILEVER ARM LENGTH	DIMENSIONS							
	A	B	C	D	E	F	G	H
10FT–20FT	72"	48"	12-3/4"	17-5/8"	6-3/8"	48"		
22FT–26FT	84"	48"	12-3/4"	17-5/8"	6-3/8"	60"		
28FT–40FT	84"	66"	12-3/4"	26-5/8"	6-3/8"	60"	15"	23-1/2"

FOUNDATION BOLTS

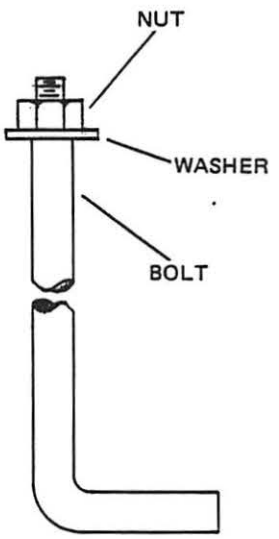

FOR CANTILEVER SIGNALS

NOTE: 4 required for single mast, 8 for double

DESCRIPTION	FOUNDATION HEIGHT
* FOUNDATION BOLT, 48" long x 1-1/2" dia. (incl. 2 nuts & washers)	72"
* FOUNDATION BOLT, 60" long x 1-1/2" dia. (incl. 2 nuts & washers)	84"

FOR FLASHER SIGNALS WITH OR WITHOUT AUTOMATIC GATES

NOTE: 4 bolts, 4 washers, 4 nuts required

PART NO.	DESCRIPTION	FOUNDATION HEIGHT
M317599	FOUNDATION BOLT, Galv. 36" x 1" dia.	48" to 72"
M254806	FOUNDATION BOLT, Galv. 24" x 1" dia.	36" to 48"
J475132-0121	WASHER	
J480210-0109	NUT, 1-8 hex	

* = Order by description.

POURED CONCRETE FOUNDATIONS FOR FLASHER SIGNALS

ggested concrete foundations for clamp bases or junction box bases with 9-1/2" x 9-1/2" bolt spacing are shown below.

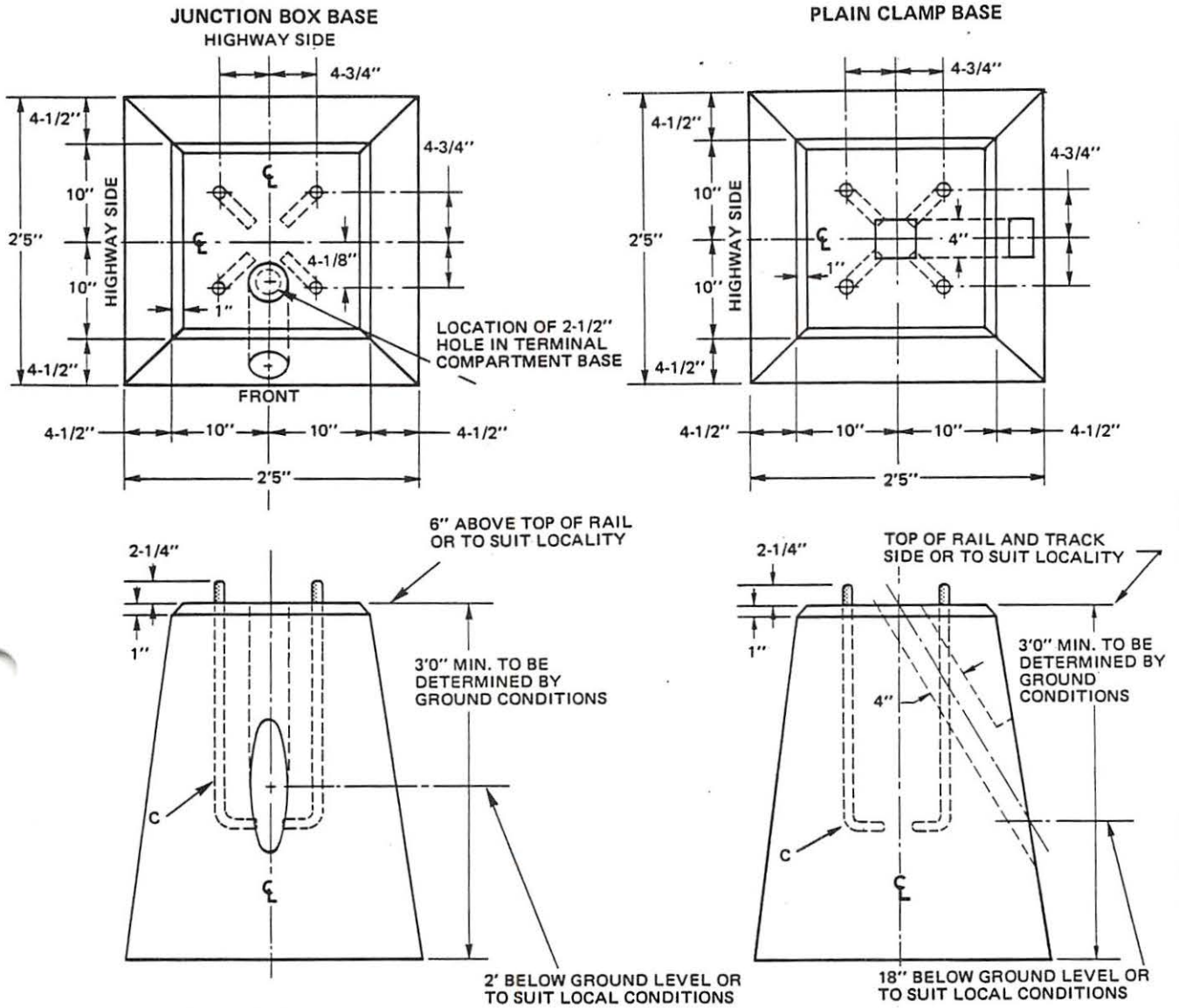

FOR MULTIPLE OR SIMILAR CABLE ARRANGEMENT WITH TERMINAL BOX LOCATED OPPOSITE SIDE FROM TRACK

FOR MULTIPLE OR SIMILAR CABLE

MATERIAL	NOTES
12.5 - Cu. Ft. Stone 6.25 - Cu. Ft. Sand 3.12 - Bags Cement Concrete Mixture 1-2-4 4 - Foundation Bolts 1" x 24" with Hex Nut and Washer. Conduit as required. See Note A.	A - Dimensions of chase may be varied to suit number of electrical conductors. Fibre or steel conduit of suitable diameter may be substituted for chase. B - Foundation to be placed square with the highway regardless of the angle of the crossing. C - Refer to ordering reference for foundation bolt size and part number.

POURED CONCRETE FOUNDATIONS
FOR FLASHER SIGNALS WITH AUTOMATIC GATES

A suggested poured concrete foundation for junction box bases with 11-11/16" x 11-11/16" bolt spacing is shown below.

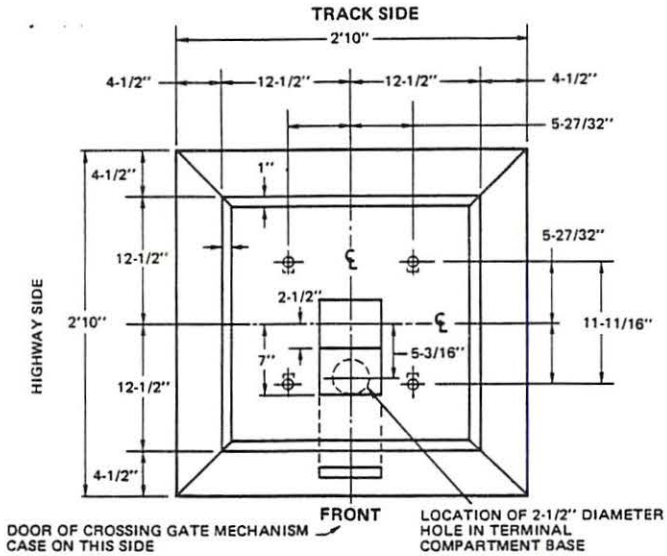

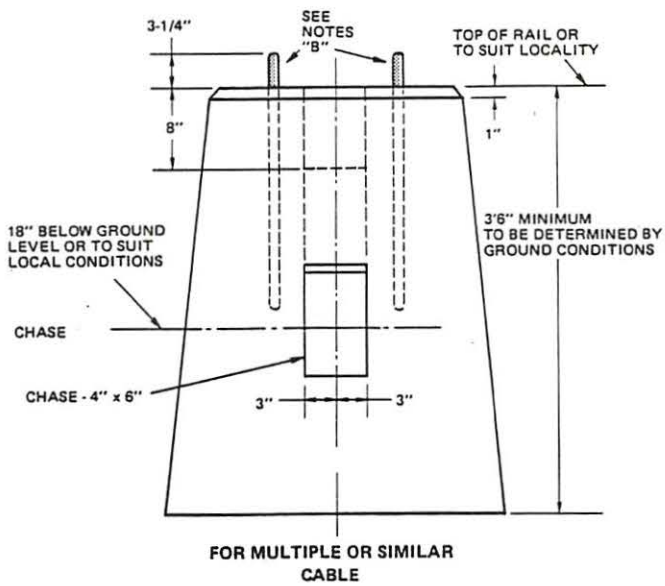

MATERIAL	NOTES
18 - Cu. Ft. Stone 9 - Cu. Ft. Sand 4.5 - Bags Cement Concrete Mixture 1-2-4 4 - Foundation Bolts with Hex Nuts and Washers.	A - Dimensions of chase may be varied to suit number of electrical conductors. Fibre or steel conduit of suitable diameter may be substituted for chase. B - Refer to ordering reference for foundation bolt size and part number.

PRECAST CONCRETE FOUNDATIONS FOR CW CANTILEVERS BY SECTIONAL FOUNDATIONS, INC.

Order by Model No., height, bolt spacing and total weight.

US&S CANTILEVER MODEL NO.	ARM LENGTH	HEIGHT	BASE (10" THICK)	12-3/4" BOLT CENTERS	19" BOLT CENTERS	TOTAL WEIGHT	REMARKS
CW-10	10 ft.	7'1"	6'6" x 6'6"				
CW-12	12 ft.						
CW-14	14 ft.			SF-10-S-12		8585 lb.	4-Piece Base
CW-16	16 ft.			SF-10-12		8585 lb.	1-Piece Base
CW-18	18 ft.				SF-10-3W-19	8580 lb.	1-Piece Base
CW-20	20 ft.				SF-10-3W-S19	8580 lb.	4-Piece Base
CW-22	22 ft.						
CW-24	24 ft.						
CW-26	26 ft.						
CW-28*	28 ft.	7'6"	7'6" x 7'6"				
CW-30*	30 ft.			SF-33-12	SF-33-19	16160 lb.	1-Piece Base
CW-32*	32 ft.			SF-33-S-12	SF-33-S-19	16160 lb.	4-Piece Base
CW-34*	34 ft.						
CW-36*	36 ft.	8'6"	7'6" x 7'6"	SF-33-S-12	SF-36-S-19	16754 lb.	4-Piece Base
				SF-35-12	SF-36-19	16754 lb.	1-Piece Base
CW-38*	38 ft.	9'6"	7'6" x 7'6"	SF-38-S-12	SF-38-S-19	19230 lb.	4-Piece Base
CW-40*	40 ft.			SF-38-12	SF-38-19	19230 lb.	1-Piece Base

* Double Mast

PRECAST CONCRETE FOUNDATIONS FOR CW CANTILEVERS BY PERMACRETE PRODUCTS CORP.

Order by Model No., height, bolt spacing and total weight.

US&S CANTILEVER MODEL NO.	ARM LENGTH	HEIGHT	BASE	12-3/4" BOLT CENTERS	19" BOLT CENTERS	TOTAL WEIGHT	REMARKS
CW-10	10 ft.	7'1"	6'6" x 6'6"				
CW-12	12 ft.						
CW-14	14 ft.			S-10127S		11420 lb.	4-Piece Base
CW-14	16 ft.			S-10127		9120 lb.	1-Piece Base
CW-18	18 ft.				S-10-3W	8580 lb.	1-Piece Base
CW-20	20 ft.				S-10-3WS		4-Piece Base
CW-22	22 ft.						
CW-24	24 ft.						
CW-26	26 ft.						
CW-28*	28 ft.	7'6"	7'6" x 7'6"				
CW-30*	30 ft.			S-19127	S-19197	16730 lb.	1-Piece Base
CW-32*	32 ft.			S-19127S	S-19197S	19695 lb.	4-Piece Base
CW-34*	34 ft.						
CW-36*	36 ft.	8'6"	7'6" x 7'6"	S-19128	S-19198	17900 lb.	1-Piece Base
				S-19128S	S-19198S	20860 lb.	4-Piece Base
CW-38*	38 ft.	9'6"	7'6" x 7'6"	S-19129	S-19199	19230 lb.	1-Piece Base
CW-40*	40 ft.			S-19129S	S-19199S	22195 lb.	4-Piece Base

*Double Mast

PRECAST CONCRETE FOUNDATIONS FOR FLASHER SIGNALS AND FLASHER SIGNALS WITH AUTOMATIC GATES BY SECTIONAL FOUNDATIONS, INC.

Order by Model No., height, bolt length and total weight.

FOUNDATION MODEL NO.	BOLT CENTERS	HEIGHT	BOLT LENGTH	BASE 3-1/2" THICK	TOTAL WEIGHT
		FLASHER ONLY FOUNDATIONS			
SF-1	9-1/2" x 9-1/2"	2'6"	32-1/4"	30" x 30"	544 lb.
SF-1	9-1/2" x 9-1/2"	3'6"	44-1/4"	30" x 30"	702 lb.
SF-1	9-1/2" x 9-1/2"	4'6"	56-1/4"	30" x 30"	806 lb.
SF-1	9-1/2" x 9-1/2"	5'6"	68-1/4"	30" x 30"	910 lb.
SF-1X	9-1/2" x 9-1/2"	4'7-1/2"	58-1/4"	30" x 30"	860 lb.
		FLASHER AND GATE FOUNDATIONS			
SF-2	11-11/16" x 11-11/16"	3'6"	44-1/4"	30" x 30"	1096 lb.
SF-2	11-11/16" x 11-11/16"	4'6"	56-1/4"	30" x 30"	1293 lb.
SF-2	11-11/16" x 11-11/16"	5'6"	68-1/4"	30" x 30"	1490 lb.
SF-2	11-11/16" x 11-11/16"	6'6"	80-1/4"	30" x 30"	1686 lb.
SF-2	11-11/16" x 11-11/16"	7'6"	92-1/4"	30" x 30"	1882 lb.
SF-2	11-11/16" x 11-11/16"	8'6"	104-1/4"	30" x 30"	2078 lb.
SF-2X	11-11/16" x 11-11/16"	3'6-1/2"	44-1/4"	30" x 30"	996 lb.
SF-2X	11-11/16" x 11-11/16"	5'7-1/2"	69-1/4"	30" x 30"	1368 lb.

PRECAST CONCRETE FOUNDATIONS FOR FLASHER SIGNALS AND FLASHER SIGNALS WITH AUTOMATIC GATES BY PERMACRETE PRODUCTS CORP.

Order by Model No., height, bolt length and total weight.

FOUNDATION MODEL NO.	BOLT CENTERS	HEIGHT	BOLT LENGTH	BASE 3-1/2" THICK	TOTAL WEIGHT
		FLASHER ONLY FOUNDATIONS			
S-1	9-1/2" x 9-1/2"	2'6"	32-1/4"	30" x 30"	544 lb.
S-1	9-1/2" x 9-1/2"	3'6"	44-1/4"	30" x 30"	702 lb.
S-1	9-1/2" x 9-1/2"	4'6"	56-1/4"	30" x 30"	806 lb.
S-1	9-1/2" x 9-1/2"	5'6"	68-1/4"	30" x 30"	910 lb.
		FLASHER AND GATE FOUNDATIONS			
S-2	11-11/16" x 11-11/16"	3'6"	44-1/4"	30" x 30"	1096 lb.
S-2	11-11/16" x 77-11/16"	4'6"	56-1/4"	30" x 30"	1293 lb.
S-2	11-11/16" x 11-11/16"	5'6"	68-1/4"	30" x 30"	1490 lb.
S-2	11-11/16" x 11-11/16"	6'6"	80-1/4"	30" x 30"	1686 lb.
S-2	11-11/16" x 11-11/16"	7'6"	92-1/4"	30" x 30"	1882 lb.
S-2	11-11/16" x 11-11/16"	8'6"	104-1/4"	30" x 30"	2078 lb.

SUPERVISORY, CODE, & DATA SYSTEMS

RSE-11

SUPERVISORY, CODE, AND DATA SYSTEM

DIGITAL DATA LINK SYSTEM

DDL-601A RSE-11A1

DDL-601A DIGITAL DATA LINK SYSTEM

The DDL-601A Digital Data Link is a micro processor-based code system designed to communicate controls and indications between a Central Traffic Control office and remote wayside locations. It is normally applied as a complete system, consisting of an Office Code Unit and between 1 and 127 Field Code Units simultaneously managed by the office.

DDL-601A OFFICE CODE UNIT

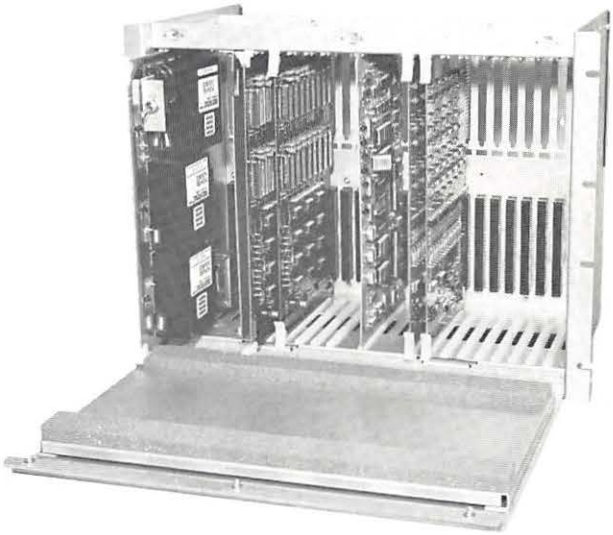

DDL-601A FIELD CODE UNIT

The DDL-601A Office Code Unit is designed to be compatible with most types of CTC Office Controllers. Supervisory information is exchanged with the controller via serial interface. (See diagram on following page.) The Field Code Units deliver office-initiated controls to wayside control relays and scan wayside indication contact inputs, both over direct hard wire interface. Remote communications between the DDL-601A Office and Field Code Units can be accomplished via EIA standard modems (RS-232C interface) or, when required, with the US&S DSC-600 (5V TTL) modem system. Both Office and Field Code Units provide modem outputs and monitor for turn-on of the modem carrier signal so that data can be transmitted at the proper time.

The DDL-601A Office can instruct the Field Units in various modes, including communication of data with selected code units and specific controls/indications within a code unit, or simultaneous communication with all Field Code Units. Bit rates for the Office/CTC and all Office/Field links are set manually on the Office Code Unit. The Field automatically returns data to the Office at that rate.

Timing adjustments on both Office and Code Units make certain no operation is executed out of sequence or before associated circuits have time to reset. State-of-the-art NMOS processor chip technology is in both Office and Field Code Units to maximize the speed, volume and flexibility of all communication links. BCH data security is utilized to insure a high degree of information accuracy.

The DDL-601A can be interfaced with the US&S DDL-601 on a system basis. For example, a DDL-601A Office could control DDL-601 Field Units, or a combination of DDL-601A and DDL-601 Field Units. No software changes are necessary for DDL-601A/DDL-601 hybrid systems, although some wiring modifications are required. For specifics on such systems and DDL-601A CTC application possibilities as a whole, contact your US&S representative.

NOTE:It is not practical to cover all the various combinations of use of the equipment in this document. A complete list of reference publications is provided under Ordering Information. It is recommended that you refer to these publications to familiarize yourself with the various applications and configurations, or consult your nearest US&S representative.

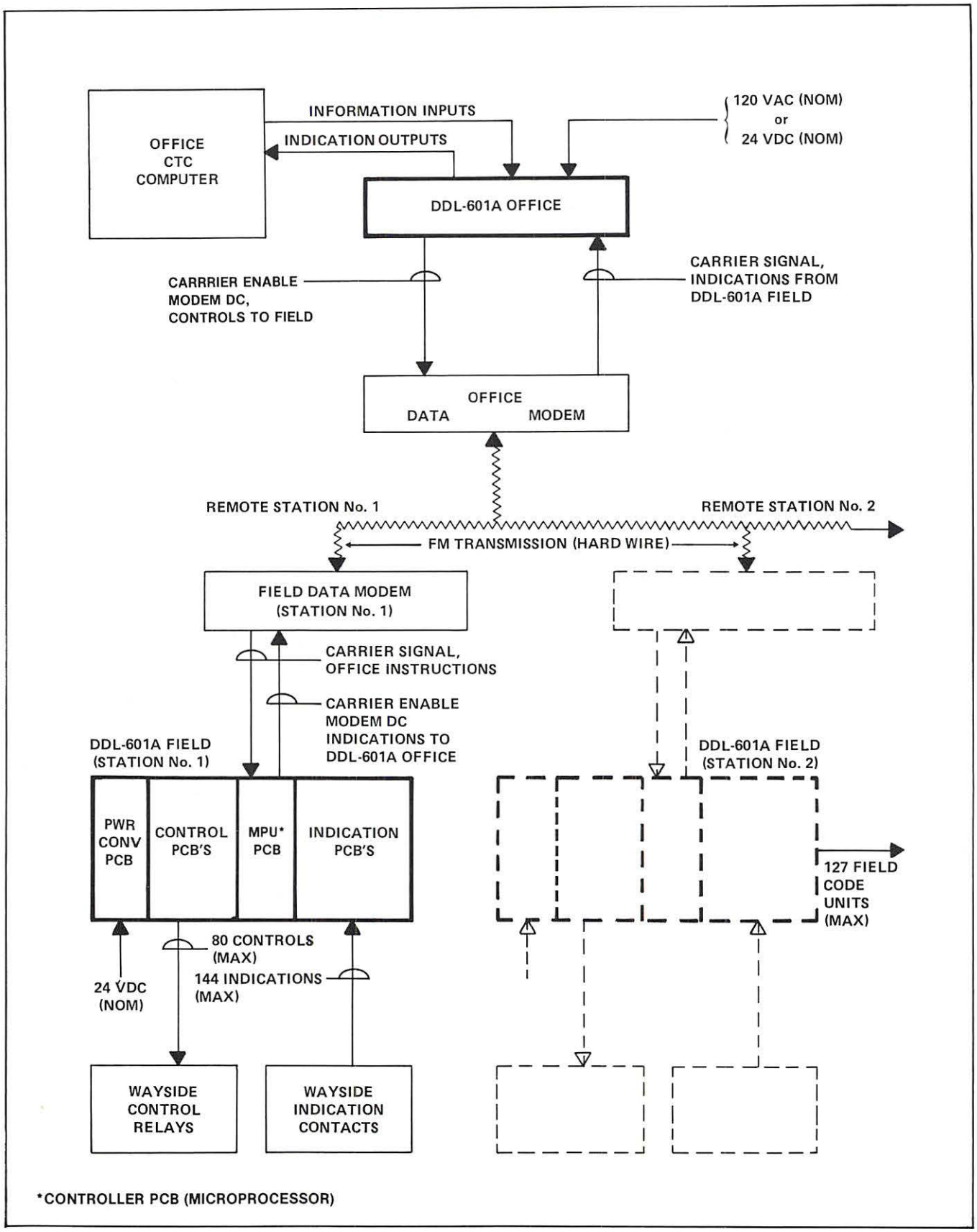

DIAGRAM A - DDL-601A INTEGRATED WITH CTC SYSTEM

DDL-601A OFFICE CODE UNIT

DESCRIPTION

Office Code electronics are contained in a rack-mountable (std. 19") roll out drawer 19" x 12" x 5-¼". US&S offer two drawers, N452583-0102 with a permanent AC to DC power supply converter for operation off standard 120VAC commercial power, or N451583-0102 with a DC to DC converter which accomodates facilities with 24VDC power.

A LED window is provided on the drawer front panel to monitor principal operations,. Industry-standard 37 and 50-way "D" style connector/cable assemblies are required (not included with the drawer) to interface associated equipment on the back panel. Power is applied through the familiar 3-pin connector (same for both input versions). The Code Unit is equipped internally with manual switches which accomplish all timing, bit rate, mode option and miscellaneous hardware programming required for proper operation of the Office in the customer's particular CTC system.

A significant feature of the DDL-601A Office is the Office/Controller serial mode interface which allows asynchronous communication of all data and control bits over two or four 20ma current loops (per application) requiring only 4 or 6 wires. The Office is designed to relay Field instructions via 5V TTL (including the US&S DSC-600) or EIA standard digital carrier system modem. For complete application information, request service manual SM-6174 (DDL-601A System Application Guide) or contact your nearest US&S representative.

FEATURES

- Compact, modular design requires minimal space, easy access for maintenance purposes.
- Optional drawers for AC or DC office facility power.
- LED's monitor critical circuit functions, help localize problems.
- Test-points on all boards.
- Fully adjustable communication bit rates from 75 to 2400 baud to Field, 110 to 9,600 to CTC computer (see Specifications).
- Compatible with 5V TTL or EIA modem, dc output to modem available.
- CTC serial interface minimizes external wiring.
- Handles up to 10, 160 controls and 18,288 indications to and from Field Code Units.

SPECIFICATIONS

Overall Dimensions:	W = 19", L = 12", H = 5¼"
Access:	Roll-out shelf, removable top cover.
Mounting:	Std. 19" equipment rack.
Required connectors:	Two (2) 37-way "D" style, male. Three (3) 50-way "D" style, male. One (1) 3-pin, female.
DC power input (N451583-0102 Drawer):	21 to 30VAC, 24VDC (nominal) @50 watts (maximum).
AC power input N451583-0103 Drawer:	105 to 125VAC, 120VAC (Nominal) @35 watts (maximum), .75amps (maximum)
Temperature environment:	0°C to +50°C
Baud rates to Field:	75, 100, 200, 400, 600 1,200 or 2,400
Baud rates to CTC computer, serial mode:	110, 150, 300, 600, 1,200 1,600, 2,400, 4,000 or 9,600
Maximum capability:	127 Field Code Units.

DDL-601A FIELD CODE UNIT

DESCRIPTION

Field Code Unit electronics are shared among plug-in printed circuit boards contained in a rack mountable card file 19" x 13¾" x 10½". US&S offers a standard vacant card file with permanent back panel "mother" board. PCB's are then installed per customer requirement. All Field Code Units operate from 24VDC power interfaced with a standard DC/DC converter PCB. Interfacing to external equipment (including power input) requires 44-way connector/cable assemblies, which are plugged into the installed boards through slots on the upper back panel; these assemblies are available as separate items from US&S for selected interfaces.

All DDL-601A Field Code Units require a single controller PCB, which manages all Field information processing. This board is equipped with jumper locations which control timing, mode options and miscellaneous functions. Seven LED's are mounted on the front edge for monitoring principal functions, and three toggle switches provide various system reset functions.

The remaining slots contain varying numbers of control output and indication input PCB's as required by the customer's wayside relay circuits. One to five control output boards, each with 16 possible outputs, allow a maximum of 80 controls per code unit.One to nine indication input boards, each with 16 possible inputs, allow a maximum of 144 indications per code unit. A significant feature of the DDL-601A Field is elimination of the need for indication input start circuits. The system samples all indication inputs on a periodic basis and compares with memory. If a change is detected, an internal start is automatically generated. This enables far more efficient use of available indication contacts than before. For complete application information, request service manual SM-6174 (DDL-601A System Application Guide) or contact your nearest US&S Sales Representative.

The DDL-601A Field is designed to relay Office communications via 5V TTL (including US&S DCS-600) or EIA standard digital carrier system modem. The Field may be connected with a wide variety of wayside relay arrangements via direct, hardwire interface.

FEATURES

- Compact, modular design requires minimal rack space.
- Removable PCB's for ease of maintenance, control/indication flexibility.
- LED's monitor all critical functions, help localize problems.
- No start circuits required. System scans indications periodically, recognizes changes.
- No manual baud rate adjustment needed. System duplicates rate of incoming data with return transmission.
- Compatible with 5V TTL or EIA modem, dc output to modem available.
- Interfaces directly with wayside relays, no external conversion/protection of logic/relay level signals required.
- Handles up to 80 controls and 144 indications. Compatible with DDL-601 Office.

SPECIFICATIONS

Overall Dimensions:	W = 10½", L = 19", H = 13¾"
Access:	Removable Front Cover
Required Connectors:	44-way PCB edge connectors, all PCB's.
DC Power Input (all units):	21 to 32 VAC, 24VDC (nominial) 40 watts (max.), 5% ripple (max.)
Control Bit and Deliver PCB output relay contacts:	1 amp. 50V, 5VA (maximums)
Control Delivery PCB:	0.35 amps, 16V, 5VA (maximums)
Indication - Opto optical isolator inputs:	8-16 VDC, 12VDC (nominal), 5% ripple (maximum)
Temperature environment:	−40°C to +70°C
PCB Complements:	One (1) power supply converter. One (1) controller. One to five (1-5) control PCB's. One to nine (1-9) indication PCB's.
Max. Capability: (per code unit):	80 controls, 144 indications.

DDL-601A OFFICE AND FIELD TEST SETS

US&S provides computerized troubleshooting test sets for both the DDL-601A Office and Field; these are ordered separately from the code units. The test sets utilize toggle switches, LED and digital displays which greatly simplfy and expedite troubleshooting. As a result, the technician need not have an extensive array of test equipment on hand, or possess high level electronic skills to carry out basic trouble analysis.

DDL-601A OFFICE TEST SET

The TS-101 is designed to localize problems on all DDL-601A Office circuits except power supply. The set is equipped with connector plugs which feed the test signals directly into the drawer; partial disassembly is required and the set uses Office power to operate. Two diagnostic Programmable Read-Only Memory (PROM) IC's are stored on the set. When troubleshooting is required, the PROM's are substituted for regular service PROM's in the Office to assist in diagnostics.

SPECIFICATIONS:
OFFICE TEST SET, TS-101

Dimensions: 10"L x 5"W x 3¼"H

Power: No external power required.

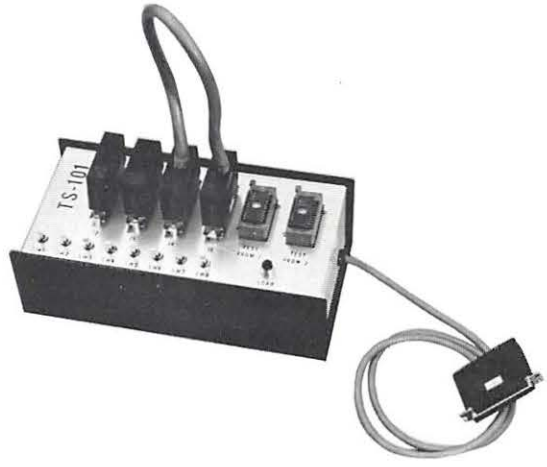

TS-101 TEST SET

DDL-601A FIELD TEST SET

Five test sets shown below are available for troubleshooting all DDL-601A Field boards. A Field board is pulled from the card file and fitted into the appropriate set (see ordering) for circuit locality troubleshooting. The Controller Board Test Sets (TS-201, 204) carry a diagnostic PROM which replaces the service PROM on the Controller to assist in diagnostics. All Field test sets require their own power.

TEST SET 203	
24V Power Supply Converter	(N451441-3301)
12V Power Supply Converter	(N451441-3303)
Indication-Opto	(N451441-3201)
Transmitter-Opto	(N085722-1001)

SPECIFICATIONS:
FIELD TEST SET, TS-201, 202, 203

Dimensions (all sets): 15½"L x 14"W x 11" H

Power: 115VAC (nominal)

DDL-601A FIELD PCB'S TEST SET APPLICABILITY

TEST SET 201 OR 204	
Controller PCB	(N451441-3501)

TEST SET 202 OR 205	
Control Bit & Deliver	(N451441-4201)
Control Delivery	(N451441-3601)
Constant Control Delivery	(N451441-4401)
Control & Delivery	(N451441-4701)

TYPICAL FIELD TEST SET (TS-203)

ORDERING INFORMATION

The application of DDL-601A Digital Data Link equipment is dependent on overall system configurations. Because data link applications differ from system to system, there are no specific ordering references that would apply to all cases. Consult your nearest US&S representative for details and system planning information. This will ensure that (a) the code units complement the operational needs of wayside control equipment in the most efficient and cost-effective manner and (b) the system is properly configured for reliable operation. US&S provides a complete line of literature to familiarize the customer with the applications possibilities of the DDL-601A. For example, Bulletin 362, "Office and Code Configuration Guide" shows the exceptional adaptability of the DDL-601A (and related US&S micro-processor equipment) to widely different CTC system configurations (i.e. office interfaces with Micro-700 or Mini-Computer, hybrid field systems with 601A ***and*** non-US&S Field Code Units etc.). Service Manual 6174, "DDL-601A System Application Guide" describes the precise installation requirements of the DDL-601A which are necessary for system planning.

The part number listings below should only be used for reference purposes or when ordering spares.

DDL-601A OFFICE CODE UNIT	
DESCRIPTION	**PART NO.**
DC Office Code Unit	N451583-0102
AC Office Code Unit	N451583-0103

DDL-601A FIELD CODE UNIT	
DESCRIPTION	**PART NO.**
Card File	N451583-0301,-0302
24V Power Supply Converter PCB	N451441-3301
Controller PCB	N451441-3501
Control Bit and Deliver PCB	N451441-4201
Control Delivery PCB	N451441-3601
Indication-Opto PCB	N451441-3201
Constant Control Delivery	N451441-4401
Control and Delivery	N451441-4701
Transmitter-Opto	N085722-1001
12V Power Supply Converter	N451441-3303
120V Power Supply Converter	N451441-4601

OFFICE AND FIELD TEST SETS	
DESCRIPTION	**PART NO.**
TS-101 Test Set	N451583-1801
TS-201 Test Set	N451400-2001
TS-202 Test Set	N451400-2101
TS-203 Test Set	N451400-2201
TS-204 Test Set	N451400-3201
TS-205 Test Set	N451400-3101

PUBLICATIONS	
Computerized Central Office Office and Code Configuration Guide	BUL. 362
DDL-601A Office Code Unit (Operation and Maintenance)	SM-6141
DDL-601A Field Code Unit (Operation and Maintenance)	SM-6142
Digital Code System Application Guide, Including Office and Field Code Unit (Installation, Power/Signal Interfacing, System Timing and Hardware Programming)	SM-6199
TS-101 Test Set (General Operation and Maintenance)	SM-6170
TS-201, 202, 203, 204, 205 Test Sets (General Operation and Maintenance)	SM-6171

UNION SWITCH & SIGNAL DIVISION
AMERICAN STANDARD INC. / SWISSVALE, PA 15218

DDL-601B DIGITAL DATA LINK FIELD UNIT

The DDL-601B Field Code Unit is an enhanced version of the DDL-601A Field Code Unit covered in RSE-11A1, and serves the same primary function of implementing wayside control instruction from central office, and returning wayside status indications to the office.

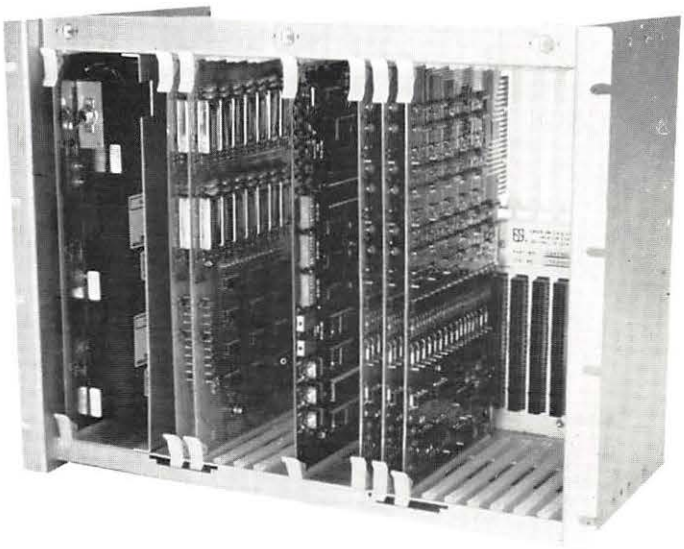

The major difference is the many interface options offered by the DDL-601B unit that were not available with previous field code units. These include: a wide-range of power-converter, optical-input and relay-output PCB's to accommodate special application requirements; and "Extended-delivery" software for wayside control circuits which require slower relay actuation timing.

DESCRIPTION

The DDL-601B is a 19" rack mounted card file containing up to 16 printed circuit boards. The board complement consists of a power converter, a microprocessor, from 1 to 5 relay-output, and from 1 to 9 optical-input PCB's. A basic field unit with 16 indications and 16 controls consists of only four circuit boards including the power supply. The DDL-601B unit may operate from a standard 120vac source, or a dc supply in the range of 9.9 to 32vdc.

APPLICATION

The DDL-601B Field Code unit is direct replacement for the DDL-601A Field Code Unit. The DDL-601B can be controlled by US&S's DDL-601A office or the new SAM-II office code units. DDL-601/DDL-601B systems allow control of up to 127 remote stations, each with a maximum capability of 80 controls and 144 indications per field unit, expandable in 16-bit increments.

Using the SAM-II Office Code Unit allows for interfacing a relay logic office to the DDL-601B field unit. DDL-601B communications are half-duplex at an adjustable speed of 75 to 2400 bits per second. BCH data security is utilized to insure a high degree of communications accuracy. A summary of system capacities is given on page 2.

THE DDL-601B design employs state-of-the-art technology which has resulted in unique features and advantages over previous code systems. Some of the more important features are listed below:

FEATURES/BENEFITS

- Compact, modular design makes installation fast and easy. Fits any standard 19" communications rack.
- Basic Field Unit requires only four boards including power supply board.
- Field expandable simply by plugging in additional boards.
- Easy to maintain.
  - — Removable printed circuit boards
  - — LED's provide visual response of system operation
  - — Test point connections provided
  - — Diagnostic test sets available for all field unit PCB's (except AC/DC Power Supply PCB)*
  - — Programmed diagnostic IC's expedite troubleshooting

*See RSE-11A1

SAM-II/DDL601B

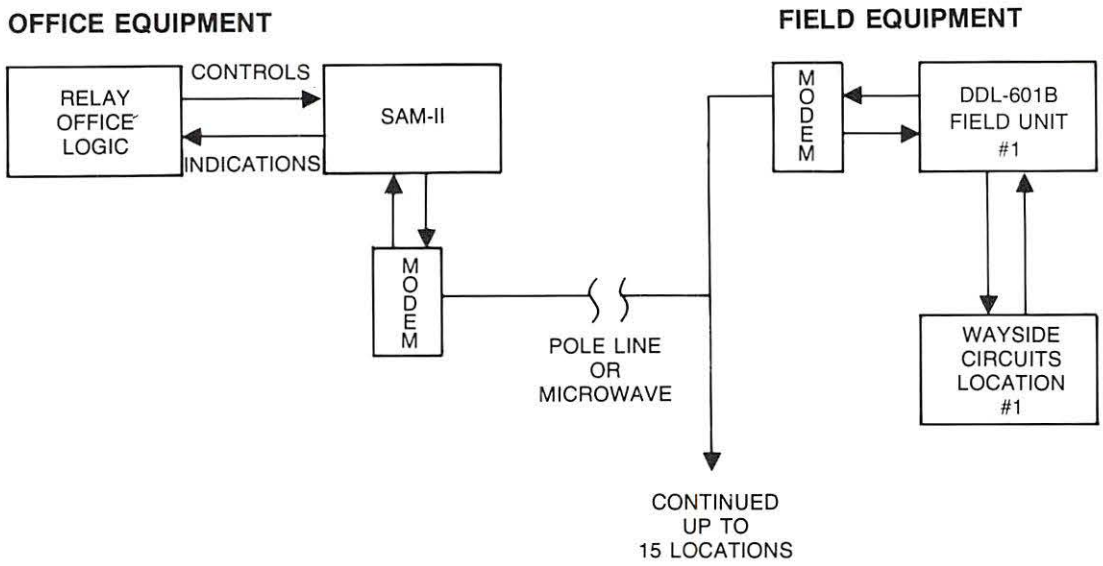

DDL-601A/DDL-601B

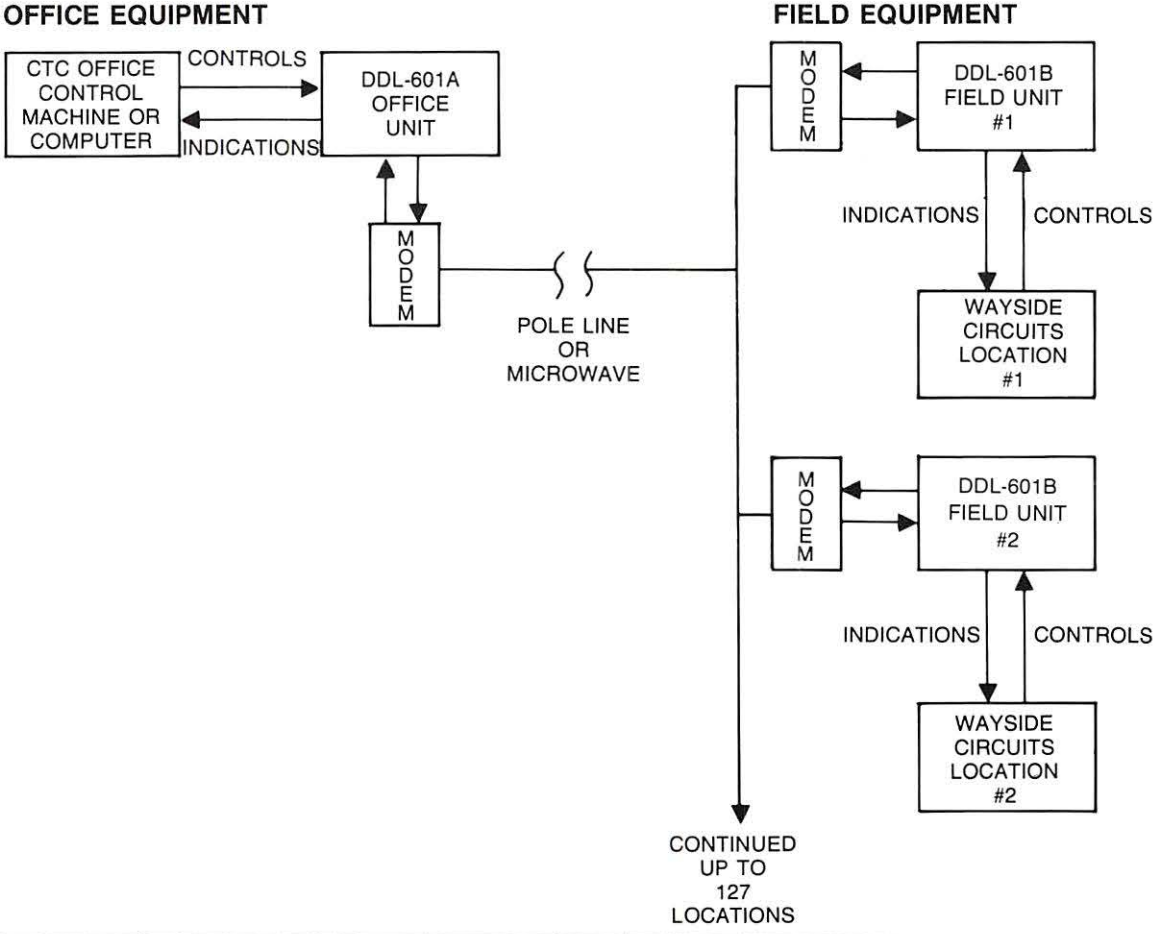

SYSTEM BLOCK DIAGRAMS

MAINTENANCE

Maintenance is simplified by LED's monitoring the system and when activated indicate the location of board failure. This speeds up field troubleshooting and allows for fast board swapping to correct any malfunction. Special test sets are available to test circuit boards quickly for component level trouble shooting.

SUMMARY OF SYSTEM CAPABILITIES

TYPE OF SYSTEM
DDL-601A/DDL-601B

Stations (Maximum):
127

Indication Bits:
144 per unit,
18,288 maximum system

Control Bits:
80 per unit,
10,160 maximum system

TYPE OF SYSTEM
SAM-II/DDL-601B

Stations (Maximum):
15

Indication Bits:
144 maximum system

Control Bits:
80 maximum system

SPECIFICATIONS

System bit rates of 75, 100, 200, 400, 600, 1200, 1600 or 2400 baud available.

Modem Interface Options:

Standard EIA (RS-232)
5V TTL (i.e. US&S DCS-600)

Relay-Output PCB Options:

— Parallel-pulse delivery
— Parallel-pulse delivery with checkback
— Sequential-pulse delivery
— Constant-pulse delivery

Optical-Input PCB Options:

— 8-16vdc opto-coupler input
— 5-32vac or vdc opto-coupler input

Power Converter PCB Options:

9.9 to 32vdc, 5% ripple (maximum)
120vac (nominal), 50 or 60 Hz.

Temperature Range:
−40°C to +70°C

Scan Indications:

— Periodically scans all indications and records changes
— No start circuit required

Adjustable Bit Rate:

— Field units automatically determine the bit rate from the office, so system bit rate changes can be made by only adjusting the office unit

ORDERING INFORMATION

As the final configuration of the DDL-601B is dependent upon system applications and associated equipment, it is not possible to list part number references for ordering DDL-601B equipment. For your particular requirements, consult your nearest US&S representative.

For complete application information, refer to SM6199. For additional equipment information and detail parts list, refer to service manuals SM6200 and SM6141.

UNION SWITCH & SIGNAL DIVISION
AMERICAN STANDARD INC. / SWISSVALE, PA 15218

FIELD CODE EMULATOR
FCE-500

The FCE-500 microprocessor-based unit is designed as a direct replacement for existing Union Switch & Signal's 506/514 relay field code equipment.

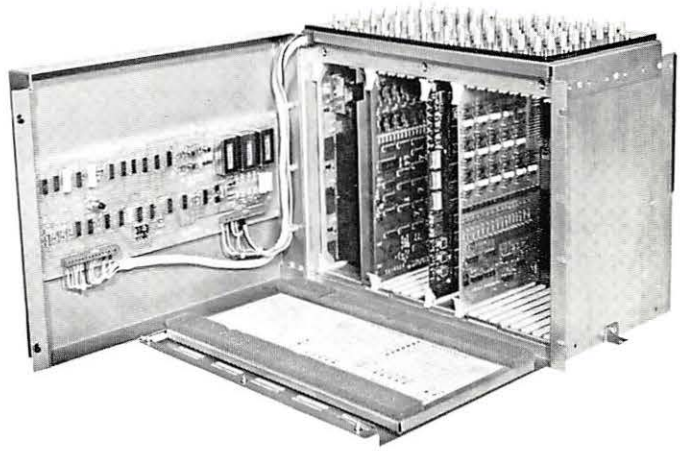

DESCRIPTION

The basic FCE-500 is comprised of four different printed circuit boards which are housed in a 19 inch card file, and a code line interface printed circuit board which is mounted to the inside of a front-hinged panel. The code line interface board enables communications between the existing dc code line and the high-speed logic of the FCE-500 controller. The four card file printed circuit boards are:
1) CONTROLLER PCB - Contains all diagnostic and supervisory logic, including the software program which emulates 506 or 514 field units.
2) POWER SUPPLY CONVERTER PCB - Converts existing dc facility power to level required for internal electronics.
3) RELAY-OUTPUT PCB - Converts controller PCB microprocessor outputs to relay-contact outputs. Each relay-output PCB replaces control bit functions of LCS unit and any extension units.
4) OPTICAL -INPUT PCB - Electrically isolates and converts wayside contact inputs to microprocessor-compatible state. Each optical-input PCB replaces indication bit functions of LCS unit and any extension units. Additional (1 or 2) boards provide 506 "S" unit addresses (jumper-selected). The FCE-500 is easily expanded to accomodate additional function by adding additional PCB's. The card file will hold up to 14 boards (14 active slots).

A plug coupler located at the top of the unit allows for easy replacement of existing units. The 506/514 units can simply be unplugged and removed and the new FCE-500 plugged in. No field rewiring is required for most applications. Where 506/514 expansion units exist, as many as four such units can be replaced through the addition of PCB's to the FCE-500 card file. Each PCB has an associated extension unit plug coupler again provided for ease of replacement.

APPLICATION

The FCE-500 will directly replace any 506 or 514 field code unit either on a one-to-one basis or on a system-wide basis. The FCE-500 will interface directly with all 506/514 office code equipment, so there is no need to replace any office equipment while upgrading field coded equipment. As illustrated in Diagram A, a substantial reduction in associated field equipment will be realized in converting to FCE-500 equipment. Once an entire code line is completely converted to FCE-500's, it is then possible to convert to a high speed DDL-601 code operation with only minor modifications to the FCE-500 field code equipment, additions of modems where necessary, and replacement of office code equipment. This is shown by Diagram B.

FEATURES

- Low power consumption.
- One FCE-500 replaces 506, 506A, 506C and 514 units and up to four extension units.
- Compatible with existing 506 or 514 field and office equipment.
- Builds toward state-of-the-art high speed code system (75-2400 baud).
- Cost effective relay-logic to digital-logic conversion.
- Plug-in PCB design for ease of maintenance, minimum down time, high reliability.
- Board level field maintenance by LED indications.
- Product test sets available for component level troubleshooting.

UNION SWITCH & SIGNAL DIVISION
AMERICAN STANDARD INC. / SWISSVALE, PA 15218

PRINTED IN U.S.A.

SPECIFICATIONS:

Input Power Options:

9.9 to 32vdc, 5% Ripple (Max.)
105 to 135vac, 50 or 60 Hz.

Field Input Interface:

Optically coupled
8 to 32vdc or vac

Field Output Interface:

Sequential operation of output contacts (typical)

Dimensions:

19"W x 15-1/2"H x 12-1/2"D
(19" equipment rack, shelf or stand off wall mount)

Note that an 18-1/2" minimum shelf height is recommended for ease of plug connector insertion and removal.

Extension Unit Plug Coupler:

48-terminal, electrically and mechanically compatible

Temperature Range:

−40°C to +70°C

CONVERSION TO HIGH SPEED DDL-601B CODE OPERATION

To convert to high speed DDL-601B code operation, it is simply a matter of unplugging the controller PCB card edge connector at the rear of the unit and replacing with a connector wired for high speed modem operation. This will disconnect the PCB located in the front panel. The PCB and panel, if desired, can then be removed. Also, it is necessary to replace the PROM program chip on the Controller PCB with a new PROM for DDL-601B operation. Detailed procedures for accomplishing this is covered in SM6199.

Power to the system can be 9.9 to 32 volts dc.

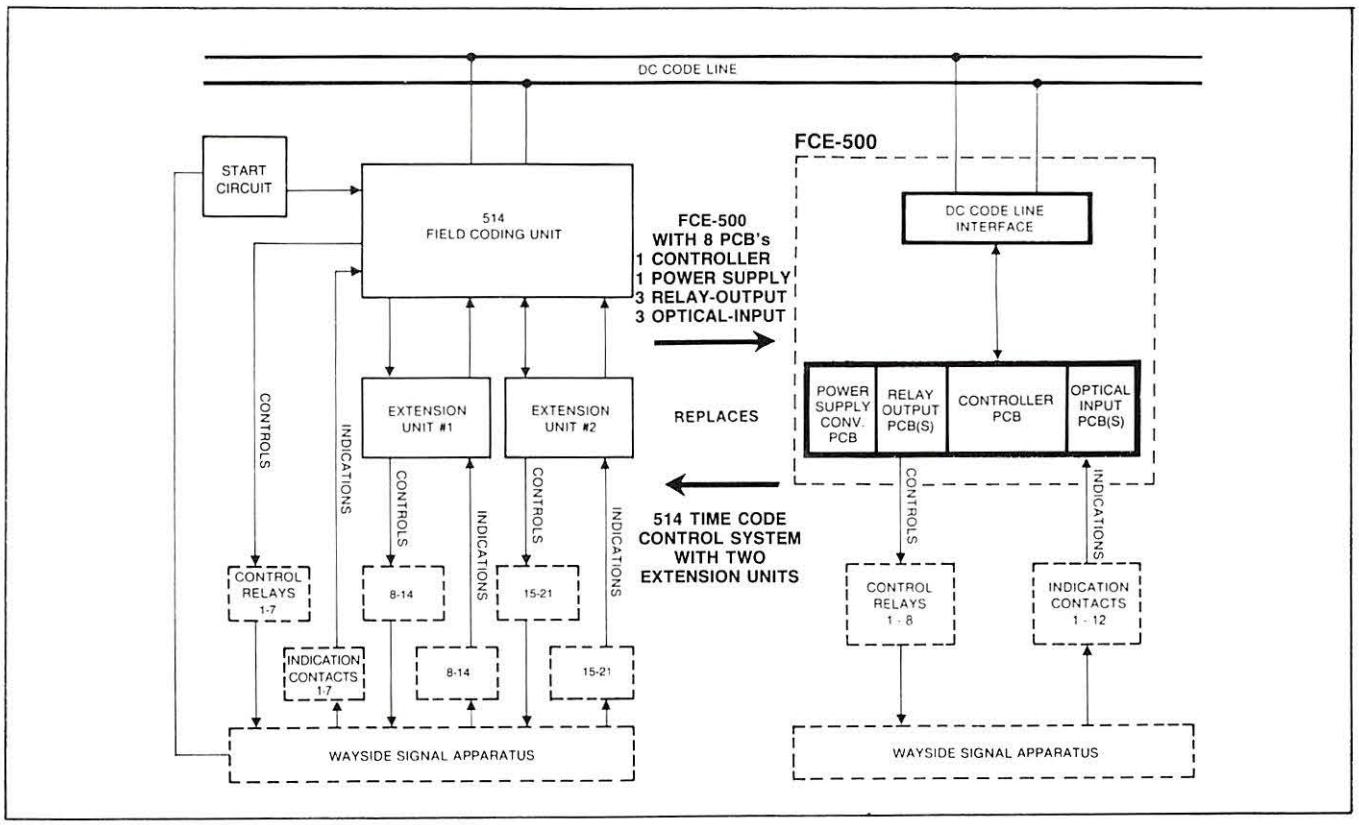

DIAGRAM A - APPLICATION OF FCE-500 FIELD CODE EMULATOR

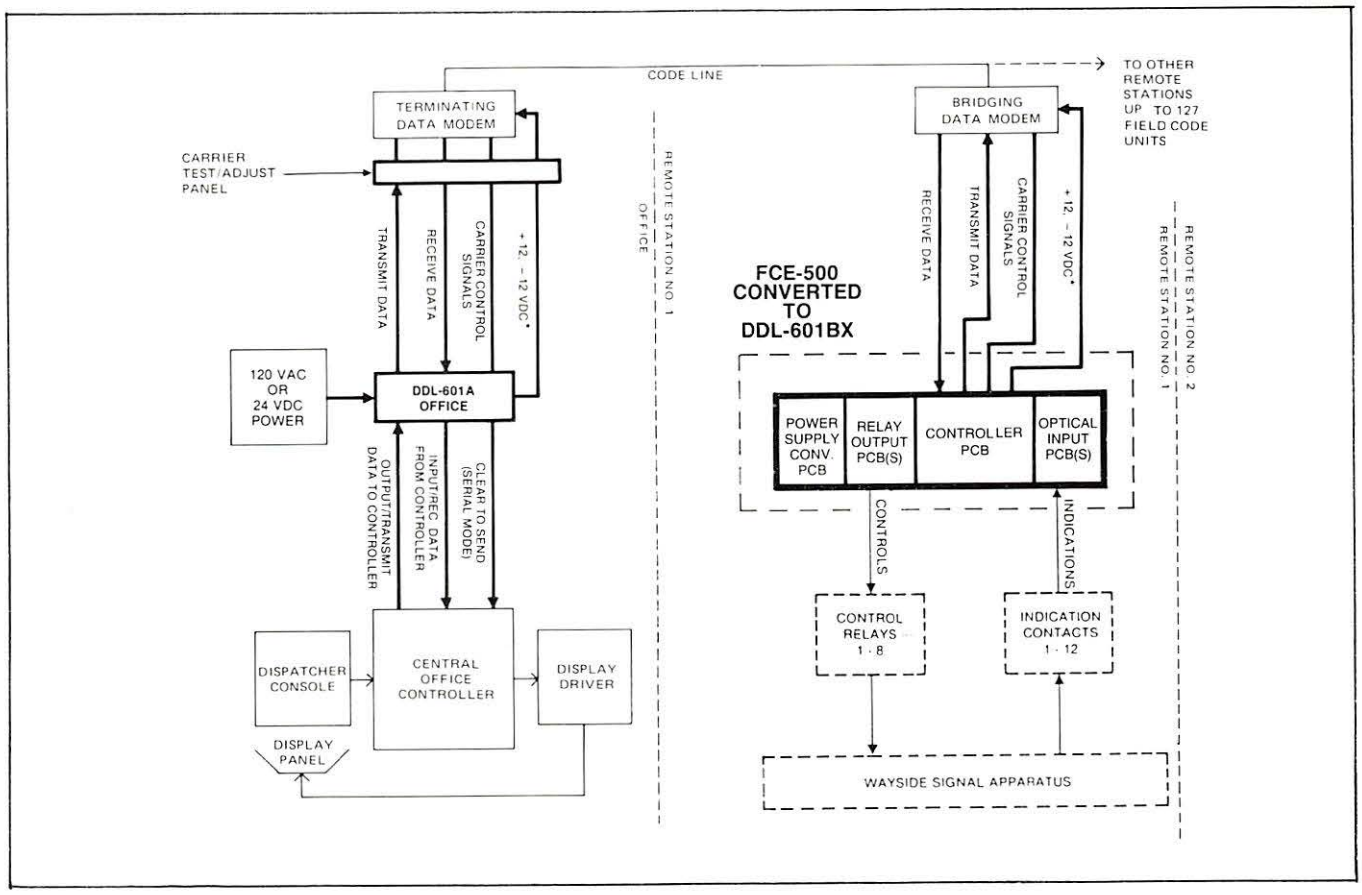

DIAGRAM B - CONVERSION TO HIGH SPEED USING DDL-601

FIELD CODE EMULATOR FCE-500

ORDERING INFORMATION

REPLACEMENT DATA

1. A 506C or 514 FCE-500 code system without extension units will require only one card file with one controller PCB, one relay-output PCB, and one optical-input PCB and a power supply PCB.
2. 506C and 514 FCE-500 code system with extension units will require the above configuration plus one relay-output and one optical-input PCB for each extension unit up to four.
3. A 506 or 506A FCE-500 system with extension units requires the above (2) configuration, plus one extra optical-input PCB for one or two "S" units, and two extra optical-input PCB's for three or four "S" units.

Determine your existing code system configuration and order directly from the tabulation that follows by adding correct suffix numbers to the basic part number.

PART NO. N451583-09XX

RELAY CODE TYPE	NUMBER OF EXTENSION UNITS				
	0	1	2	3	4
506	01	02	03	04	05
506A	06	07	08	09	10
506C	11	12	13	14	15
514	16	17	18	19	20

CONVERTING FCE-500 TO DDL-601BX

Refer to previous paragraphs and order replacement PROM, Part No. N451575-0604.

TEST EQUIPMENT

The following test equipment is applicable to FCE-500 and DDL-601B/BX. Order by full part number from the tabulation.

PART NO. N451400-XXXX

TEST SET	SUFFIX	USE
TS-203	-2201	Optical-input PCB's
TS-204	-3202	Controller PCB
TS-205	-3101	Relay-output PCB's

For additional information and detail parts list, refer to service manuals SM6202 and SM6199.

STAND-ALONE MONITOR
SAM-II

The SAM-II Stand Alone Monitor is a microprocessor-based system designed for CTC offices and other remote control applications. It is used to interface a control panel or a relay office to a DDL-601B high speed code system and is particularly suited for low density systems where computerization is not required and relay logic can adequately do the job. A SAM-II System is capable of supervising up to 15 DDL-601B field units, however, only nine of such stations may be assigned Indication Words, and none of the Indication Words can be shared between stations.

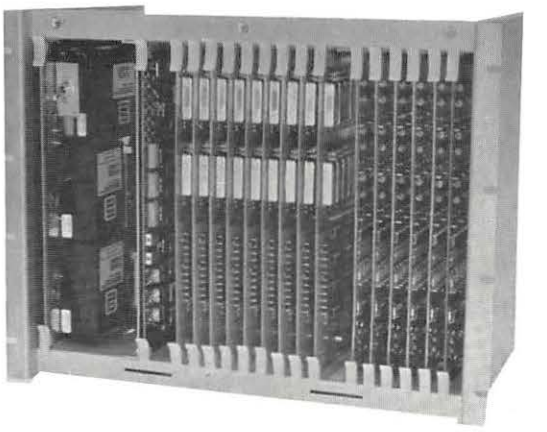

DESCRIPTION

The SAM-II consists of a standard 19" rack-mounted card file. The card file contains up to 18 boards consisting of a power supply, microprocessor controller, and indication input and control output PCB's as required for the application.

Internal circuit connections between boards are made on PCB connector edge receptacles along the inside of the cardfile rear panel. The receptacles share a printed circuit "motherboard", which is responsible for carrying board-to-board communications. The PCB's are interfaced with external equipment cabling (power supplies, modems, wayside relays etc.) using 44-pin edge connectors, which are fitted through slots along the top of the card file rear panel. Power to the unit may be obtained from standard 120 volts ac, or a dc source in the range of 9.9 to 32 volts.

APPLICATION

The maximum capacity of the SAM-II card file is five control words and nine indication words, with up to nine stations, depending upon the size of each station. Each word represents 16 bits of data. The control word bits may be divided among field stations as desired (such as between nine stations). Indication words are assigned on a word-by-word basis.

If required, multiple SAM-II units can be employed using independent communication channels.

FEATURES

- Enables relay logic control of high speed DDL-601B field systems.
- Ideal for low density CTC systems without computerzied office.
- Adaptable to relay logic office systems.
- Board level field maintenance by LED indications.
- Portable test sets available for all PCB's for component level troubleshooting.
- Low power consumption.

SPECIFICATIONS

Input Power Options:
9.9 to 32vdc, 5% ripple (maximum).
120vac (nominal), 50 or 60 Hz.

Mounting:
Standard 19" equipment rack.

Bit Rates with Field:
75, 100, 200, 400, 600, 1200, or 2400 baud.

Modem Interface Options:
Standard EIA (RS232C) or 5V TTL (US&S DCS-600)

Control/Indications Capabilities:
5 Control words (any bit arrangement) - 80 bits
9 Indication Words - 144 bits

Temperature:
−40°C to +70°C

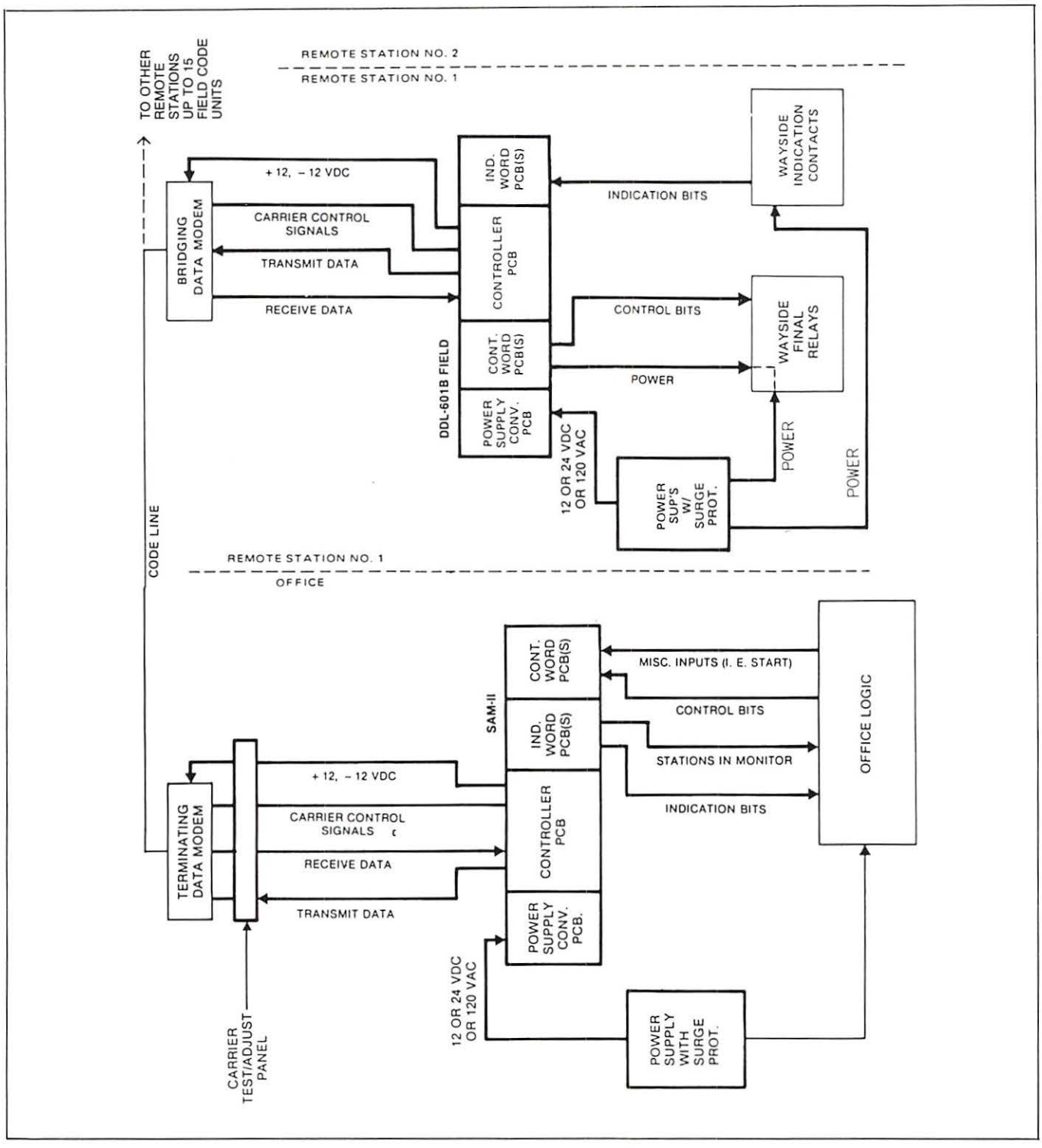

STAND-ALONE MONITOR SAM II

ORDERING INFORMATION

As the final configuration of the SAM-II is dependent upon system applications and associated equipment, it is not possible to list part number references for ordering SAM-II equipment. For your particular requirements, consult your nearest US&S representative.

For complete application information, refer to SM6199. For additional equipment information and detail parts list, refer to service manual SM6201.

SECIFICATIONS

Input Power Options:

9 to 18vdc, 12vdc (nominal) at 3 amps (maximum)
5% ripple (maximum)

21 to 32vdc, 24vdc (nominal) at 5 amps (maximum)
5% ripple (maximum)

105 to 120vac, 110vac (nominal) at 3 amps (maximum)
50 or 60 Hz.

Mounting:

Standard 19" equipment rack.

Bit Rates with Field:

75, 100, 200, 400, 600, 1200, or 2400 baud.

Modem Interface Options:

Standard EIA (RS232C) 5V TTL (US&S DCS-600)

Control/Indications Capabilities:

5 Control words (any bit arrangement) - 80 bits
9 Indication Words - 144 bits

Temperature:

−40°C to +70°C

STAND-ALONE MONITOR
SAM II

ORDERING INFORMATION

As the final configuration of the SAM-II is dependent upon system applications and associated equipment, it is not possible to list part number references for ordering SAM-II equipment. For your particular requirements, consult your nearest US&S representative.

For complete application information, refer to SM6199. For additional equipment information and detail parts list, refer to service manual SM6201.

GENISYS™
NON-VITAL LOGIC EMULATOR

The microprocessor-based Genisys™ Non-Vital Logic Emulator (NVLE) enables development of non-vital logic control systems or emulation of existing relay-based systems. The control logic may be written by the customer, using a simple but highly flexible Boolean logic-based programming language.

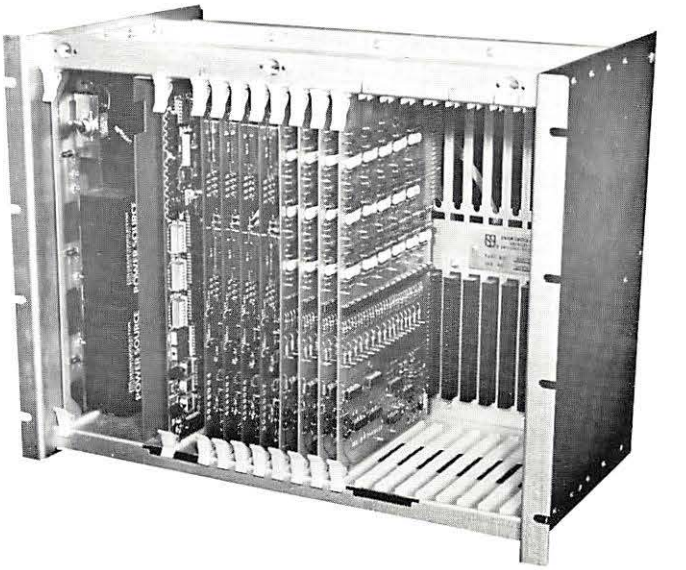

DESCRIPTION

The basic Genisys™ NVLE unit consists of four different types of plug-in printed circuit boards in a 19" rack-mount card file. Parallel data I/O to local circuits, high-speed serial I/O with remote devices and operating power are interfaced using standard 44-pin card edge connectors. The PCB's include:

1) CONTROLLER — Contains all Genisys™ NVLE internal supervisory logic, and a variable number of high-capacity programmable memory chips (EPROMS) which carry the user's application logic.
2) POWER SUPPLY CONVERTER — Single PCB allows operation from 9.9 to 32vdc or 120vac.
3) RELAY-OUTPUT PCB — Provides relay contact outputs for driving local relay coils, etc. Three options are provided.
4) OPTICAL-INPUT PCB — Electrically isolates local inputs (i.e., contact) to the Controller PCB circuits. Three options are provided.

APPLICATION

The Genisys™ NVLE is designed primarily for code system applications previously handled by relay-logic or special-purpose digital logic. It may be employed as a standard field code unit, using pre-programmed application logic for interface to an office computer or an office Genisys™ NVLE unit. Or, it may be specially programmed to combine standard code functions with custom application logic such as final stick circuits, local control panel interface, or field meet/pass logic (see Figure A). Configurations may include stand-alone units with local inputs and/or outputs only, or units supervised by a Master Genisys™ NVLE unit or computer. Some systems may require modems. Communications options include EIA standard RS-423 (RS-232C compatible) or 5 volt TTL.

FEATURES

- User-developed application logic.
- Suitable for many non-vital logic applications.
- Stand-alone or multi-unit on-line configurations.
- Master/Slave communications protocol.
- System expansion through serial communications ports.
- EIA or TTL compatible communications.
- Plug-in PCB design for ease of maintenance, minimum down-time.
- LED indicators for general system monitoring.
- Optional test software program for Controller PCB, using computer terminal.
- Optional portable test sets for input and output boards.

SPECIFICATIONS

Dimensions:
19"W x 13-3/4"H x 10-1/2"D

Mounting:
Standard 19" equipment rack

Input Power Options:
- 9.9 to 32vdc, 5% ripple (maximum) or 120vac, 50 or 60 Hz

Temperature Range:
−40 C to +70 C

Local Inputs/Outputs:
- Up to 256 inputs *and/or* outputs per Genisys™ NVLE card file
- Expandable in 16-bit input or output increments

Master/Slave Systems:
- 255 Slave units (maximum) per Master; practical configurations in the range of 50 - 100 units

Serial Communications:
- EIA RS-423 (RS-232C compatible) or 5 volt TTL

Relay-Output PCB Options:
- Constant delivery (Genisys™ NVLE standard)
- Pulsed delivery
- Internally-strobed delivery
- 50 VA (maximum) contact rating on constant and pulse delivery PCB's
- 10 VA (maximum) contact rating on internal-strobe PCB

Optical-Input PCB Options:
- 5-32vdc or vac, 2 mA coupler input (constant current input)
- 8-32vdc or vac

Internal Memory:
- Up to 40K bytes for application logic
- Software emulation of 1450 relay coils (maximum) with no fixed limit on contacts per relay
- Up to five 8K EPROM's, for application logic (programmed prior to installation)

Software Timer Resolution:
- 10 to 250 msec., resolution ±5 msec.
- 1 to 25 sec., resolution ±50 msec.
- 1 to 25 min., resolution ±3 sec.

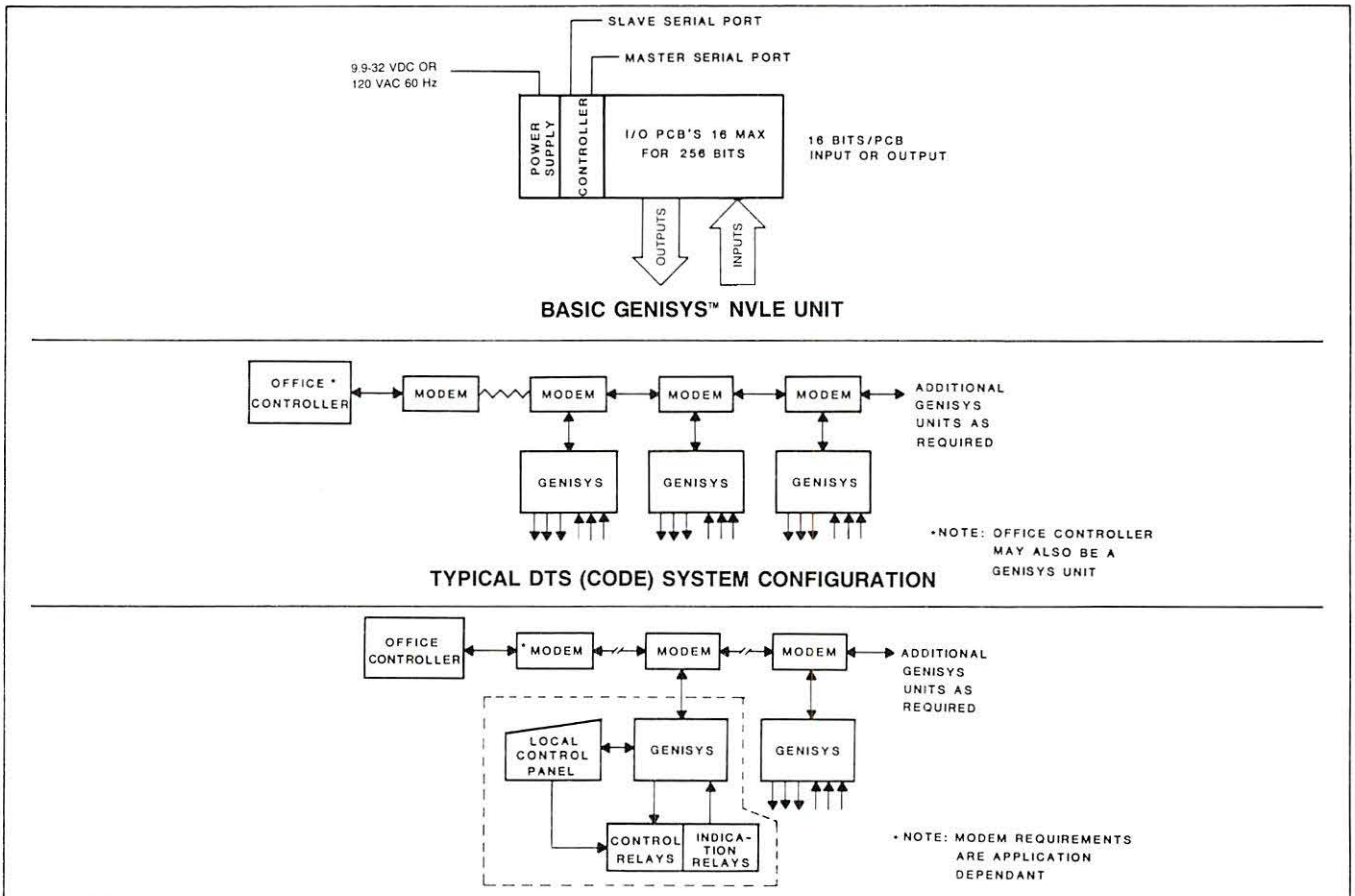

TYPICAL GENISYS™ NVLE SYSTEM EXPANSION CONFIGURATION SHOWING A CENTRAL OFFICE CONTROLLER INTERFACED TO A DTS SUBSYSTEM FOR DATA ACQUISITION AND LOCAL LOGIC APPLICATION

FIGURE A. GENISYS™ NVLE BASIC UNIT, TYPICAL APPLICATIONS

GENISYS™ NVLE
ORDERING INFORMATION

Because of the large number of system applications possible with Genisys™ NVLE unit, specific ordering references for complete card files cannot be provided. Instead, US&S provides all required components and instructions to configure a complete Genisys™ NVLE-controlled system. Contact the nearest US&S district sales office for ordering. Service Manual 6300 provides complete application guidelines.

US&S provides a series of pre-programmed code system (field unit) EPROM's for the Genisys™ NVLE controller PCB. These are listed in the following tabulation. The "Controls" and "Indications" listings represent the maximum number of output and input PCB's, respectively, that may be installed in the card file for these functions. EPROM's may be selected for applications which do not use the precise control/indication configurations listed in the table, provided the number of boards selected does not exceed the listed maximum in the table. For example, a system requiring five relay-output and five optical-input boards could use EPROM N451575-0910.

PART NUMBER	CONTROL PCB's (MAX.)	INDICATION PCB's (MAX.)	PART NUMBER	CONTROL PCB's (MAX.)	INDICATION PCB's (MAX.)
N451575-0904	0	16	N451575-0913	9	7
N451575-0905	1	15	N451575-0914	10	6
N451575-0906	2	14	N451575-0915	11	5
N451575-0907	3	13	N451575-0916	12	4
N451575-0908	4	12	N451575-0917	13	3
N451575-0909	5	11	N451575-0918	14	2
N451575-0910*	6	10	N451575-0919	15	1
N451575-0911	7	9	N451575-0920	16	0
N451575-0912	8	8			

*US&S standard

The following part numbers of Genisys™ NVLE components are provided for reference and ordering of replacement parts.

PART NUMBER	DESCRIPTION
N085718-1009	CARD FILE (18-SLOT)
J766616-364	POWER SUPPLY CONVERTER PCB (9.9-32 VDC or 120 VAC)
N451441-5602	CONTROLLER PCB (ONE PER CARD FILE)
N451441-4401[1]	CONSTANT CONTROL DELIVERY PCB (STICK RELAY)
N451441-3601	CONTROL DELIVERY PCB (PULSED DELIVERY)
N451441-4701	CONTROL AND DELIVERY PCB (INTERNAL STROBE)
N451441-5802	OPTICAL-INPUT PCB (5-32 VDC/VAC, CONSTANT CURRENT INPUT)
N451441-5804[2]	OPTICAL-INPUT PCB (8-32 VDC/VAC)
N451575-0903	DIAGNOSTIC PROM (CONTROLLER PCB TEST)
J715029-0409	BLANK EPROM (USER APPLICATION LOGIC)
N451441-3101	RELAY-OUTPUT PCB TEST SET (TS-205)
N451441-2201	OPTICAL-INPUT PCB TEST SET (TS-203)
N451170-1001	EDGE CONNECTOR KIT, 44-CONTACT
J397150	CONNECTOR CONTACT CRIMP TOOL
J397149	CONNECTOR CONTACT EXTRACTION TOOL

[1]Standard Genisys™ NVLE relay-output PCB
[2]Standard Genisys™ NVLE optical-input PCB

Refer to SM-6300 for ordering of finished connector/cable assemblies for the Genisys™ NVLE relay-output, optical-input power supply converter PCB's.

EVENTTRAK
DIGITAL EVENT RECORDER SYSTEM

EventTrak is a microcomputer based Digital Event Recorder System designed by Union Switch & Signal for applications at interlockings and/or railroad grade crossings. The basic system will store 3000 events, expandable to 12,000, and, therefore, can be applied at locations requiring processing only a small amount of data, or at locations requiring processing a large amount of data. An optional Interpreter Unit is available that will enable custom programmming of mnemonics, data storage, and remote data collection. A wide variety of standard terminal/printer units may be used with the system. (The Monitor Unit is capable of operating as a stand alone unit.)

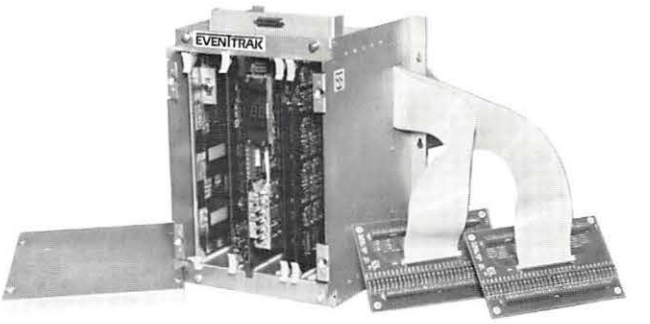

MONITOR

MONITOR UNIT

The monitor unit consists of a card file (12"W x 15"H x 10-1/2" D), and four to seven Printed Circuit Boards (PCB's) as follows:

- Power Supply (standard 12vdc, optional for 24vdc, or 120vac).
- Microcomputer board (CPU) with operation panel.
- Memory board with expandable event storage capacity.
- Input board, allowing up to 32 inputs per board. Maximum of four input PCB's for 128 total maximum per monitor unit.

A basic Monitor with only four PCB's will accept up to 32 inputs. This can be expanded to 238 by adding three additional boards. Memory capacity for the basic unit is 12K words, expandable to 48K.

Memory Capacity:

A basic unit can store up to 12,000 event changes in increments of 3,000. Only the event change and its time tag are stored. A 128 input unit will not consume memory any faster than a 32 input unit for equal numbers of event changes after initialization. When memory is filled, the oldest data is removed to allow input of current data.

Memory Storage:

All memory is stored on a single PCB, which contains its own battery to protect against loss of memory due to a power failure, or from the removal of the PCB. Memory will be retained on a removed PCB up to four years.

FEATURES & BENEFITS

- Inputs easily expandable from 32 to 128.
- Memory capacity expandable from 3,000 to 12,000 event changes.
- Memory storage up to four years on internal battery.
- Optional Operating Voltages — Choose 12 or 24vdc, or 110vac.
- Mnemonics programming by Railroad.
- Enhanced remote data printout capability.
- Utilizes latest technology — reliable, easy to install and maintain.
- Diagnostic test software.
- Remote readout capability.

PRINTED IN USA

UNION SWITCH & SIGNAL DIVISION
AMERICAN STANDARD INC. / SWISSVALE, PA 15218

RSE-11D1
3/84

Input Characteristics:

An "on" indication results from an input of seven to 36vdc or ac. Flashing of an input between 30 and 200 cycles per minute is stored as a separate flashing indication. Below 30 CPM, the on and off times are stored, and above 200 CPM is considered a steady "on".

Data output directly interfaces to terminal with printer or CRT display. Prints from oldest data to newest data. A skip control allows the user to pass over unneeded data. Remote printout of data is also possible through communication lines, or by using the Interpreter unit. Both standard and mnemonics formats are available.

INTERPRETER

The Interpreter Unit is housed in a rugged portable carrying case. A front panel contains all the controls and indicators needed to operate the unit. The panel is hinged for easy access to the printed circuit boards and other components. The Interpreter Unit can be used for custom programming an EPROM (Erasable Programmable Read Only Memory), which is transferred to the Monitor Unit CPU PCB for operation. For each indication state (1,0,F) of each input, three alpha-numeric characters can be assigned. Normally two characters followed by a space to separate data is used, for easier reading. With mnemonics format, any input can be designated as either flashing or non-flashing. Data printout with mnemonics from the monitor unit does not require the Interpreter unit. Factory programming service for custom mnemonics assignments is also available upon request.

INTERPRETER

Terminal Unit

A wide variety of standard terminal/printer units may be used, such as Texas Instruments Silent 700. Requirements are:

- EIA or 20ma current loop input.
- ASCII data format
- 80 or 132 characters per line printer.

Although data rate may be as low as 110 baud, any new terminals to be purchased are recommended to have at least 1200 baud capability.

SPECIFICATIONS

Monitor Unit Inputs:
32 to 128 (32 per each additional Opto PCB)

Memory (Event Changes):
Monitor: 3000 to 12,000 (3000-event increments)
Interpreter: Can store full capacity Monitor Unit

Memory Storage (on internal battery):
Four years (maximum) after external power off

Electrical Power Requirements:
Monitor: 12 or 24vdc, 120vac (nominal voltages)
Interpreter: 120vac (nominal)

Communications Modes:
Monitor/Terminal: EIA (RS-232C standard), 5 volt TTL or 20ma current loop.
Interpreter/Terminal: EIA (RS-232C standard) or 20ma current loop.

Communications Format:
Monitor and Interpreter: Half-Duplex (typical)

Bit Rates:
Monitor: 110 to 9600 BPS (300 BPS typical)
Interpreter: 110 to 9600 BPS (300 BPS typical)

Recommended Terminals:
Monitor or Interpreter:
Teletype Model 43
Texas Instruments Silent 700
Most CRT terminals

Logic Families:
Monitor and Interpreter: NMOS, CMOS and TTL

Temperature Range (95% Relative Humidity):
Monitor: −30° to +70°C
−22° to + 158°F
Interpreter: 0° to 60°C
32° to 140°F

EVENTTRAK DIGITAL EVENT RECORDER MONITORS

Amount of Event Storage	No. of Inputs	Input Power	Part No. Suffix	Input Power	Part No. Suffix	Input Power	Part No. Suffix
3000	32	12VDC	N451082-3001	24VDC	N451082-3017	120VAC	N451082-3033
3000	64	12VDC	N451082-3002	24VDC	N451082-3018	120VAC	N451082-3034
3000	96	12VDC	N451082-3003	24VDC	N451082-3019	120VAC	N451082-3035
3000	128	12VDC	N451082-3004	24VDC	N451082-3020	120VAC	N451082-3036
6000	32	12VDC	N451082-3005	24VDC	N451082-3021	120VAC	N451082-3037
6000	64	12VDC	N451082-3006	24VDC	N451082-3022	120VAC	N451082-3038
6000	96	12VDC	N451082-3007	24VDC	N451082-3023	120VAC	N451082-3039
6000	128	12VDC	N451082-3008	24VDC	N451082-3024	120VAC	N451082-3040
9000	32	12VDC	N451082-3009	24VDC	N451082-3025	120VAC	N451082-3041
9000	64	12VDC	N451082-3010	24VDC	N451082-3026	120VAC	N451082-3042
9000	96	12VDC	N451082-3011	24VDC	N451082-3027	120VAC	N451082-3043
9000	128	12VDC	N451082-3012	24VDC	N451082-3028	120VAC	N451082-3044
12000	32	12VDC	N451082-3013	24VDC	N451082-3029	120VAC	N451082-3045
12000	64	12VDC	N451082-3014	24VDC	N451082-3030	120VAC	N451082-3046
12000	96	12VDC	N451082-3015	24VDC	N451082-3031	120VAC	N451082-3047
12000	128	12VDC	N451082-3016	24VDC	N451082-3032	120VAC	N451082-3048

INTERPRETER

PART NO. - N451400-3001

EPROM TEST SETS

N451575-1004
N451575-1005
N451575-0702

DDL-601A DIGITAL DATA LINK SYSTEM

The DDL-601A Digital Data Link is a micro processor-based code system designed to communicate controls and indications between a Central Traffic Control office and remote wayside locations. It is normally applied as a complete system, consisting of an Office Code Unit and between 1 and 127 Field Code Units simultaneously managed by the office.

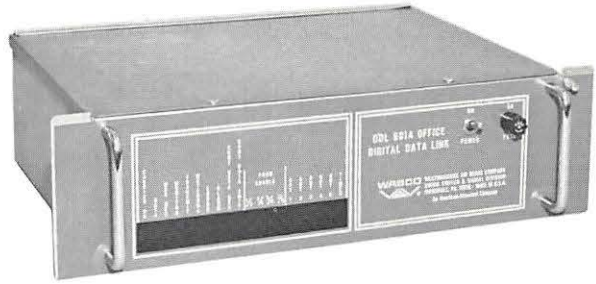

DDL-601A OFFICE CODE UNIT

The DDL-601A Office Code Unit is designed to be compatible with most types of CTC Office Controllers. Supervisory information is exchanged with the controller via serial interface. (See diagram on following page.) The Field Code Units deliver office-initiated controls to wayside control relays and scan wayside indication contact inputs, both over direct hard wire interface. Remote communications between the DDL-601A Office and Field Code Units can be accomplished via EIA standard modems (RS-232C interface) or, when required, with the US&S DSC-600 (5V TTL) modem system. Both Office and Field Code Units provide modem outputs and monitor for turn-on of the modem carrier signal so that data can be transmitted at the proper time.

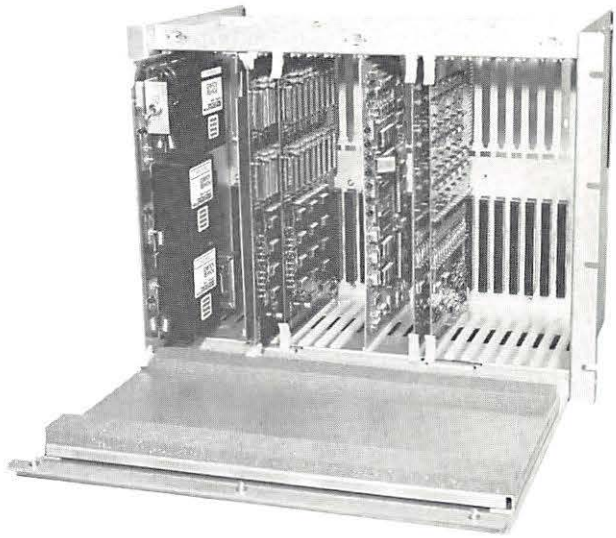

DDL-601A FIELD CODE UNIT

The DDL-601A Office can instruct the Field Units in various modes, including communication of data with selected code units and specific controls/indications within a code unit, or simultaneous communication with all Field Code Units. Bit rates for the Office/CTC and all Office/Field links are set manually on the Office Code Unit. The Field automatically returns data to the Office at that rate.

Timing adjustments on both Office and Code Units make certain no operation is executed out of sequence or before associated circuits have time to reset. State-of-the-art NMOS processor chip technology is in both Office and Field Code Units to maximize the speed, volume and flexibility of all communication links. BCH data security is utilized to insure a high degree of information accuracy.

The DDL-601A can be interfaced with the US&S DDL-601 on a system basis. For example, a DDL-601A Office could control DDL-601 Field Units, or a combination of DDL-601A and DDL-601 Field Units. No software changes are necessary for DDL-601A/DDL-601 hybrid systems, although some wiring modifications are required. For specifics on such systems and DDL-601A CTC application possibilities as a whole, contact your US&S representative.

NOTE:It is not practical to cover all the various combinations of use of the equipment in this document. A complete list of reference publications is provided under Ordering Information. It is recommended that you refer to these publications to familiarize yourself with the various applications and configurations, or consult your nearest US&S representative.

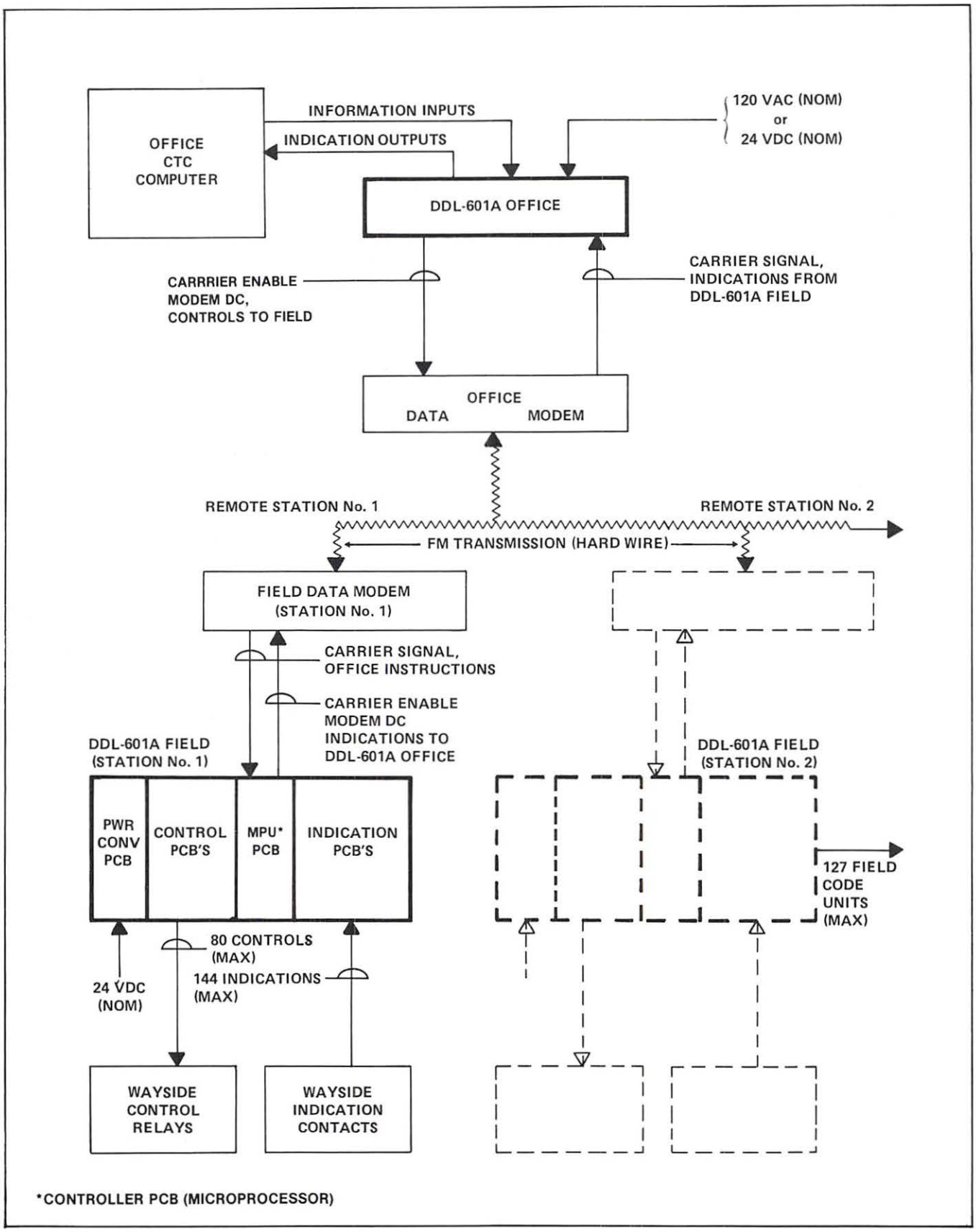

DIAGRAM A - DDL-601A INTEGRATED WITH CTC SYSTEM

DDL-601A OFFICE CODE UNIT

DESCRIPTION

Office Code electronics are contained in a rack-mountable (std. 19") roll out drawer 19" x 12" x 5-¼". US&S offer two drawers, N452583-0102 with a permanent AC to DC power supply converter for operation off standard 120VAC commercial power, or N451583-0102 with a DC to DC converter which accomodates facilities with 24VDC power.

A LED window is provided on the drawer front panel to monitor principal operations,. Industry-standard 37 and 50-way "D" style connector/cable assemblies are required (not included with the drawer) to interface associated equipment on the back panel. Power is applied through the familiar 3-pin connector (same for both input versions). The Code Unit is equipped internally with manual switches which accomplish all timing, bit rate, mode option and miscellaneous hardware programming required for proper operation of the Office in the customer's particular CTC system.

A significant feature of the DDL-601A Office is the Office/Controller serial mode interface which allows asynchronous communication of all data and control bits over two or four 20ma current loops (per application) requiring only 4 or 6 wires. The Office is designed to relay Field instructions via 5V TTL (including the US&S DSC-600) or EIA standard digital carrier system modem. For complete application information, request service manual SM-6174 (DDL-601A System Application Guide) or contact your nearest US&S representative.

FEATURES

- Compact, modular design requires minimal space, easy access for maintenance purposes.
- Optional drawers for AC or DC office facility power.
- LED's monitor critical circuit functions, help localize problems.
- Test-points on all boards.
- Fully adjustable communication bit rates from 75 to 2400 baud to Field, 110 to 9,600 to CTC computer (see Specifications).
- Compatible with 5V TTL or EIA modem, dc output to modem available.
- CTC serial interface minimizes external wiring.
- Handles up to 10, 160 controls and 18,288 indications to and from Field Code Units.

SPECIFICATIONS

Overall Dimensions:	W = 19", L = 12", H = 5¼"
Access:	Roll-out shelf, removable top cover.
Mounting:	Std. 19" equipment rack.
Required connectors:	Two (2) 37-way "D" style, male. Three (3) 50-way "D" style, male. One (1) 3-pin, female.
DC power input (N451583-0102 Drawer):	21 to 30VAC, 24VDC (nominal) @50 watts (maximum).
AC power input N451583-0103 Drawer:	105 to 125VAC, 120VAC (Nominal) @35 watts (maximum), .75amps (maximum)
Temperature environment:	0°C to +50°C
Baud rates to Field:	75, 100, 200, 400, 600 1,200 or 2,400
Baud rates to CTC computer, serial mode:	110, 150, 300, 600, 1,200 1,600, 2,400, 4,000 or 9,600
Maximum capability:	127 Field Code Units.

DDL-601A FIELD CODE UNIT

DESCRIPTION

Field Code Unit electronics are shared among plug-in printed circuit boards contained in a rack mountable card file 19" x 13¾" x 10½". US&S offers a standard vacant card file with permanent back panel "mother" board. PCB's are then installed per customer requirement. All Field Code Units operate from 24VDC power interfaced with a standard DC/DC converter PCB. Interfacing to external equipment (including power input) requires 44-way connector/cable assemblies, which are plugged into the installed boards through slots on the upper back panel; these assemblies are available as separate items from US&S for selected interfaces.

All DDL-601A Field Code Units require a single controller PCB, which manages all Field information processing. This board is equipped with jumper locations which control timing, mode options and miscellaneous functions. Seven LED's are mounted on the front edge for monitoring principal functions, and three toggle switches provide various system reset functions.

The remaining slots contain varying numbers of control output and indication input PCB's as required by the customer's wayside relay circuits. One to five control output boards, each with 16 possible outputs, allow a maximum of 80 controls per code unit.One to nine indication input boards, each with 16 possible inputs, allow a maximum of 144 indications per code unit. A significant feature of the DDL-601A Field is elimination of the need for indication input start circuits. The system samples all indication inputs on a periodic basis and compares with memory. If a change is detected, an internal start is automatically generated. This enables far more efficient use of available indication contacts than before. For complete application information, request service manual SM-6174 (DDL-601A System Application Guide) or contact your nearest US&S Sales Representative.

The DDL-601A Field is designed to relay Office communications via 5V TTL (including US&S DCS-600) or EIA standard digital carrier system modem. The Field may be connected with a wide variety of wayside relay arrangements via direct, hardwire interface.

FEATURES

- Compact, modular design requires minimal rack space.
- Removable PCB's for ease of maintenance, control/indication flexibility.
- LED's monitor all critical functions, help localize problems.
- No start circuits required. System scans indications periodically, recognizes changes.
- No manual baud rate adjustment needed. System duplicates rate of incoming data with return transmission.
- Compatible with 5V TTL or EIA modem, dc output to modem available.
- Interfaces directly with wayside relays, no external conversion/protection of logic/relay level signals required.
- Handles up to 80 controls and 144 indications. Compatible with DDL-601 Office.

SPECIFICATIONS

Overall Dimensions:	W = 10½", L = 19", H = 13¾"
Access:	Removable Front Cover
Required Connectors:	44-way PCB edge connectors, all PCB's.
DC Power Input (all units):	21 to 32 VAC, 24VDC (nominial) 40 watts (max.), 5% ripple (max.)
Control Bit and Deliver PCB output relay contacts:	1 amp. 50V, 5VA (maximums)
Control Delivery PCB:	0.35 amps, 16V, 5VA (maximums)
Indication - Opto optical isolator inputs:	8-16 VDC, 12VDC (nominal), 5% ripple (maximum)
Temperature environment:	−40°C to +70°C
PCB Complements:	One (1) power supply converter. One (1) controller. One to five (1-5) control PCB's. One to nine (1-9) indication PCB's.
Max. Capability: (per code unit):	80 controls, 144 indications.

DDL-601A OFFICE AND FIELD TEST SETS

US&S provides computerized troubleshooting test sets for both the DDL-601A Office and Field; these are ordered separately from the code units. The test sets utilize toggle switches, LED and digital displays which greatly simplfy and expedite troubleshooting. As a result, the technician need not have an extensive array of test equipment on hand, or possess high level electronic skills to carry out basic trouble analysis.

DDL-601A OFFICE TEST SET

The TS-101 is designed to localize problems on all DDL-601A Office circuits except power supply. The set is equipped with connector plugs which feed the test signals directly into the drawer; partial disassembly is required and the set uses Office power to operate. Two diagnostic Programmable Read-Only Memory (PROM) IC's are stored on the set. When troubleshooting is required, the PROM's are substituted for regular service PROM's in the Office to assist in diagnostics.

TS-101 TEST SET

SPECIFICATIONS:
OFFICE TEST SET, TS-101

Dimensions: 10"L x 5"W x 3¼"H

Power: No external power required.

DDL-601A FIELD TEST SET

Five test sets shown below are available for troubleshooting all DDL-601A Field boards. A Field board is pulled from the card file and fitted into the appropriate set (see ordering) for circuit locality troubleshooting. The Controller Board Test Sets (TS-201, 204) carry a diagnostic PROM which replaces the service PROM on the Controller to assist in diagnostics. All Field test sets require their own power.

SPECIFICATIONS:
FIELD TEST SET, TS-201, 202, 203

Dimensions (all sets): 15½"L x 14"W x 11" H

Power: 115VAC (nominal)

DDL-601A FIELD PCB'S TEST SET APPLICABILITY

TEST SET 201 OR 204	
Controller PCB	(N451441-3501)

TEST SET 202 OR 205	
Control Bit & Deliver	(N451441-4201)
Control Delivery	(N451441-3601)
Constant Control Delivery	(N451441-4401)
Control & Delivery	(N451441-4701)

TEST SET 203	
24V Power Supply Converter	(N451441-3301)
12V Power Supply Converter	(N451441-3303)
Indication-Opto	(N451441-3201)
Transmitter-Opto	(N085722-1001)

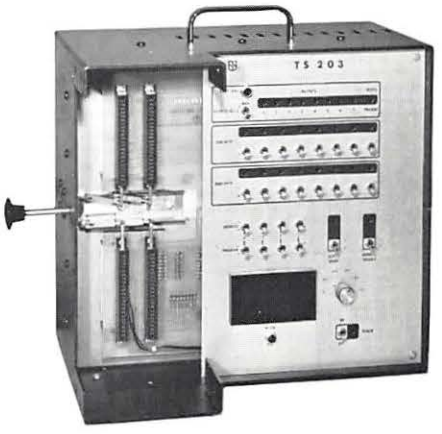

TYPICAL FIELD TEST SET (TS-203)

ORDERING INFORMATION

The application of DDL-601A Digital Data Link equipment is dependent on overall system configurations. Because data link applications differ from system to system, there are no specific ordering references that would apply to all cases. Consult your nearest US&S representative for details and system planning information. This will ensure that (a) the code units complement the operational needs of wayside control equipment in the most efficient and cost-effective manner and (b) the system is properly configured for reliable operation. US&S provides a complete line of literature to familiarize the customer with the applications possibilities of the DDL-601A. For example, Bulletin 362, "Office and Code Configuration Guide" shows the exceptional adaptability of the DDL-601A (and related US&S micro-processor equipment) to widely different CTC system configurations (i.e. office interfaces with Micro-700 or Mini-Computer, hybrid field systems with 601A ***and*** non-US&S Field Code Units etc.). Service Manual 6174, "DDL-601A System Application Guide" describes the precise installation requirements of the DDL-601A which are necessary for system planning.

The part number listings below should only be used for reference purposes or when ordering spares.

DDL-601A OFFICE CODE UNIT	
DESCRIPTION	**PART NO.**
DC Office Code Unit	N451583-0102
AC Office Code Unit	N451583-0103

DDL-601A FIELD CODE UNIT	
DESCRIPTION	**PART NO.**
Card File	N451583-0301,-0302
24V Power Supply Converter PCB	N451441-3301
Controller PCB	N451441-3501
Control Bit and Deliver PCB	N451441-4201
Control Delivery PCB	N451441-3601
Indication-Opto PCB	N451441-3201
Constant Control Delivery	N451441-4401
Control and Delivery	N451441-4701
Transmitter-Opto	N085722-1001
12V Power Supply Converter	N451441-3303
120V Power Supply Converter	N451441-4601

OFFICE AND FIELD TEST SETS	
DESCRIPTION	**PART NO.**
TS-101 Test Set	N451583-1801
TS-201 Test Set	N451400-2001
TS-202 Test Set	N451400-2101
TS-203 Test Set	N451400-2201
TS-204 Test Set	N451400-3201
TS-205 Test Set	N451400-3101

PUBLICATIONS	
Computerized Central Office Office and Code Configuration Guide	BUL. 362
DDL-601A Office Code Unit (Operation and Maintenance)	SM-6141
DDL-601A Field Code Unit (Operation and Maintenance)	SM-6142
Digital Code System Application Guide, Including Office and Field Code Unit (Installation, Power/Signal Interfacing, System Timing and Hardware Programming)	SM-6199
TS-101 Test Set (General Operation and Maintenance)	SM-6170
TS-201, 202, 203, 204, 205 Test Sets (General Operation and Maintenance)	SM-6171

DDL-601B DIGITAL DATA LINK FIELD UNIT

The DDL-601B Field Code Unit is an enhanced version of the DDL-601A Field Code Unit covered in RSE-11A1, and serves the same primary function of implementing wayside control instruction from central office, and returning wayside status indications to the office.

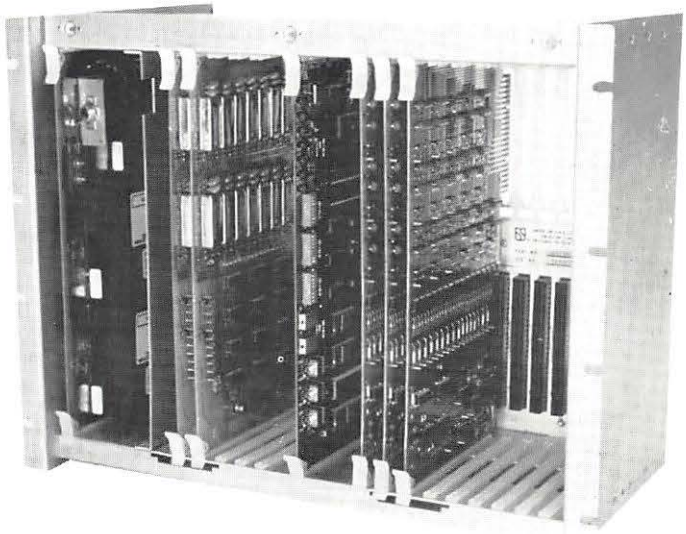

The major difference is the many interface options offered by the DDL-601B unit that were not available with previous field code units. These include: a wide-range of power-converter, optical-input and relay-output PCB's to accommodate special application requirements; and "Extended-delivery" software for wayside control circuits which require slower relay actuation timing.

DESCRIPTION

The DDL-601B is a 19" rack mounted card file containing up to 16 printed circuit boards. The board complement consists of a power converter, a microprocessor, from 1 to 5 relay-output, and from 1 to 9 optical-input PCB's. A basic field unit with 16 indications and 16 controls consists of only four circuit boards including the power supply. The DDL-601B unit may operate from a standard 120vac source, or a dc supply in the range of 9.9 to 32vdc.

APPLICATION

The DDL-601B Field Code unit is direct replacement for the DDL-601A Field Code Unit. The DDL-601B can be controlled by US&S's DDL-601A office or the new SAM-II office code units. DDL-601/DDL-601B systems allow control of up to 127 remote stations, each with a maximum capability of 80 controls and 144 indications per field unit, expandable in 16-bit increments.

Using the SAM-II Office Code Unit allows for interfacing a relay logic office to the DDL-601B field unit. DDL-601B communications are half-duplex at an adjustable speed of 75 to 2400 bits per second. BCH data security is utilized to insure a high degree of communications accuracy. A summary of system capacities is given on page 2.

THE DDL-601B design employs state-of-the-art technology which has resulted in unique features and advantages over previous code systems. Some of the more important features are listed below:

FEATURES/BENEFITS

- Compact, modular design makes installation fast and easy. Fits any standard 19" communications rack.
- Basic Field Unit requires only four boards including power supply board.
- Field expandable simply by plugging in additional boards.
- Easy to maintain.
  - — Removable printed circuit boards
  - — LED's provide visual response of system operation
  - — Test point connections provided
  - — Diagnostic test sets available for all field unit PCB's (except AC/DC Power Supply PCB)*
  - — Programmed diagnostic IC's expedite troubleshooting

*See RSE-11A1

SAM-II/DDL601B

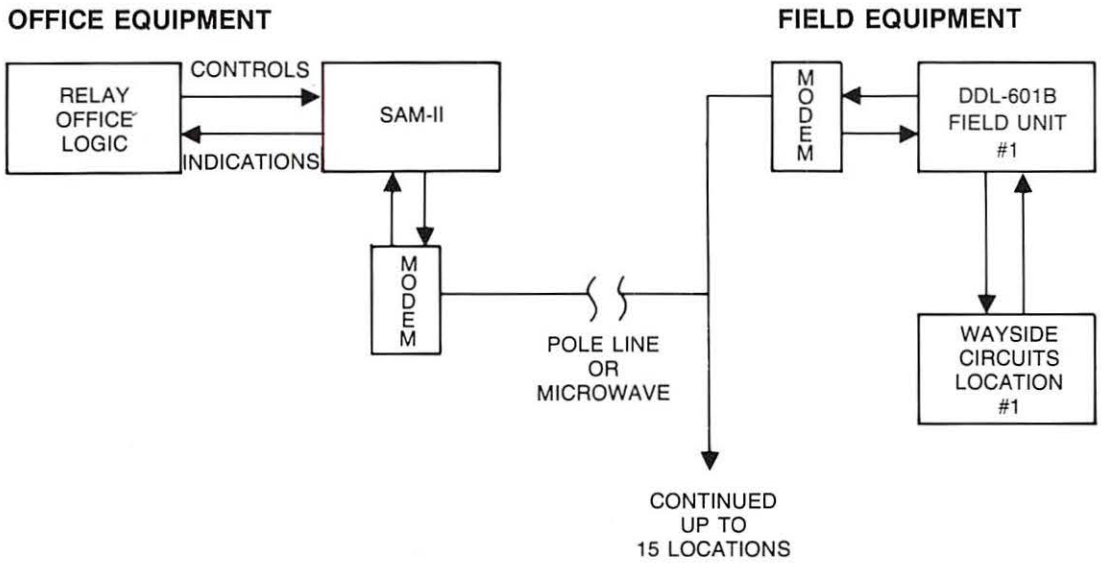

DDL-601A/DDL-601B

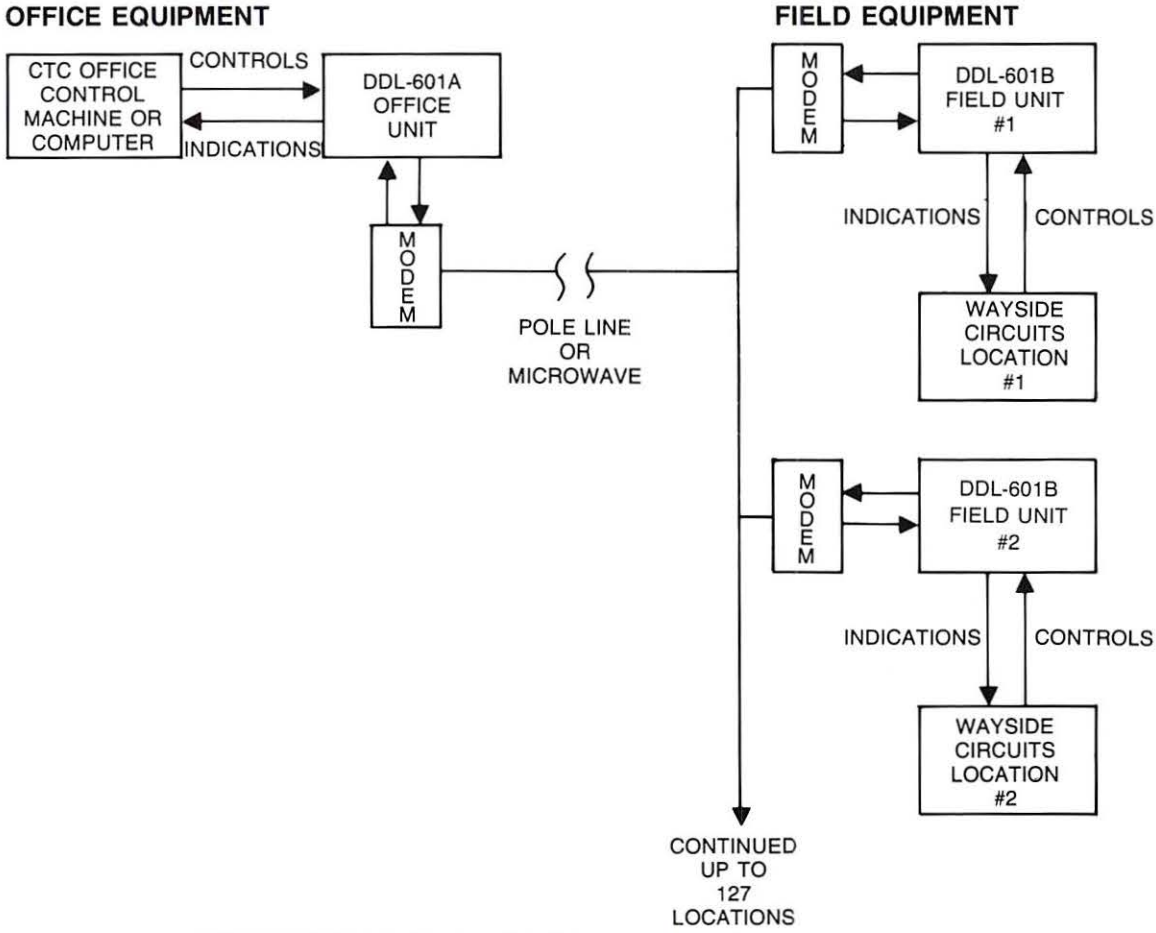

SYSTEM BLOCK DIAGRAMS

MAINTENANCE

Maintenance is simplified by LED's monitoring the system and when activated indicate the location of board failure. This speeds up field troubleshooting and allows for fast board swapping to correct any malfunction. Special test sets are available to test circuit boards quickly for component level trouble shooting.

SUMMARY OF SYSTEM CAPABILITIES

TYPE OF SYSTEM
DDL-601A/DDL-601B

Stations (Maximum):
127

Indication Bits:
144 per unit,
18,288 maximum system

Control Bits:
80 per unit,
10,160 maximum system

TYPE OF SYSTEM
SAM-II/DDL-601B

Stations (Maximum):
15

Indication Bits:
144 maximum system

Control Bits:
80 maximum system

SPECIFICATIONS

System bit rates of 75, 100, 200, 400, 600, 1200, 1600 or 2400 baud available.

Modem Interface Options:

Standard EIA (RS-232)
5V TTL (i.e. US&S DCS-600)

Relay-Output PCB Options:

— Parallel-pulse delivery
— Parallel-pulse delivery with checkback
— Sequential-pulse delivery
— Constant-pulse delivery

Optical-Input PCB Options:

— 8-16vdc opto-coupler input
— 5-32vac or vdc opto-coupler input

Power Converter PCB Options:

9.9 to 32vdc, 5% ripple (maximum)
120vac (nominal), 50 or 60 Hz.

Temperature Range:
−40°C to +70°C

Scan Indications:

— Periodically scans all indications and records changes
— No start circuit required

Adjustable Bit Rate:

— Field units automatically determine the bit rate from the office, so system bit rate changes can be made by only adjusting the office unit

ORDERING INFORMATION

As the final configuration of the DDL-601B is dependent upon system applications and associated equipment, it is not possible to list part number references for ordering DDL-601B equipment. For your particular requirements, consult your nearest US&S representative.

For complete application information, refer to SM6199. For additional equipment information and detail parts list, refer to service manuals SM6200 and SM6141.

CONTROL PANELS, CONSOLES, & DISPLAY DEVICES

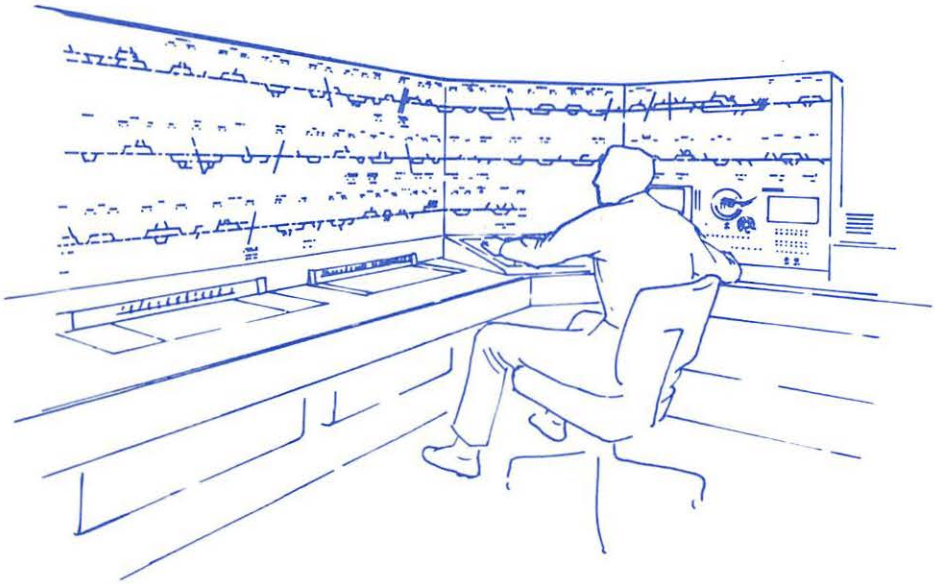

RSE-12

IDENTIFICATION SYSTEMS

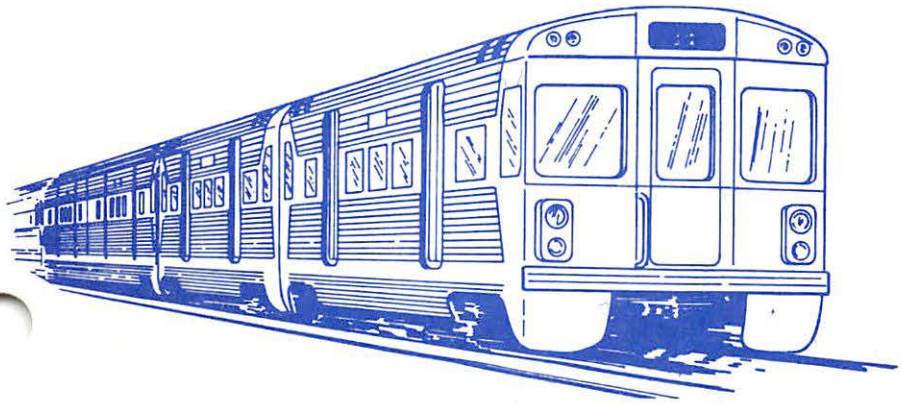

RSE-13

IDENTIFICATION SYSTEMS

Automatic Vehicle Identification System RSE-13A1

AUTOMATIC VEHICLE IDENTIFICATION SYSTEM - (AVI)

US&S's solid state Automatic Vehicle Identification System (AVI) provides an effective means of high speed data transmission between the moving car and wayside equipment. Incorporating the latest solid state digital techniques, the system offers versatile, high reliability data transmission to suit a variety of vehicle identification or data logging requirements. The system may be utilized as an integral part of a centralized traffic control code system to provide the following data functions.

- **VEHICLE IDENTIFICATION**
- **AUTOMATIC ROUTING**
- **DATA TRANSMISSION**
- **TRAIN DESTINATION**
- **SIGN DISPLAY**
- **TRAIN TRACKING**
- **MILEAGE RECORDING**

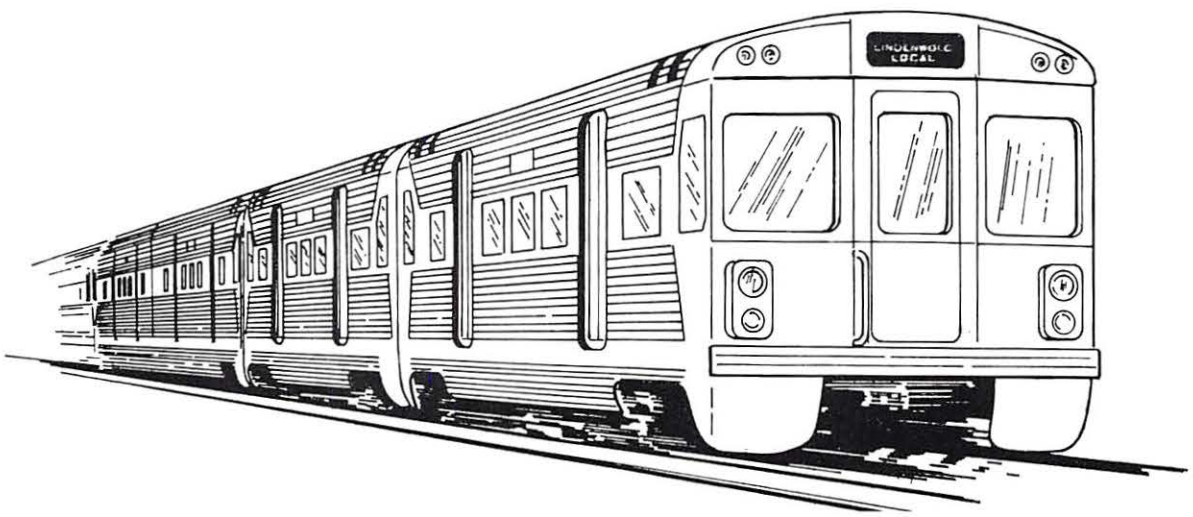

UNION SWITCH & SIGNAL DIVISION
AMERICAN STANDARD INC. / SWISSVALE, PA 15218

RSE-13A1
8/78

PRINTED IN U.S.A.

OPERATION (See Block Diagram A)

The Automatic Vehicle Identification System functions as an interrogator/transponder system. A high frequency (153.6 KHz) signal is continuously transmitted from a wayside-mounted Interrogator through a wayside coil. A vehicle-mounted programmer provides for reception of the high frequency signal and return transmission of digital data via the Transponder Coil. When the Transponder Coil comes in close proximity to the Wayside Coil, the reception of the 153.6 KHz signal initiates a data transmission sequence. The Programmer then transmits programmed digital data over a 76.8 KHz carrier frequency back to the Interrogator where it is demodulated, amplified, and bit checked by a Decoder Logic Unit; and routed to wayside control equipment or to data equipment.

The programmer is only active in the presence of the 153.6 KHz signal and requires no external vehicle power source, as it derives its power from the 153.6 KHz signal.

DESCRIPTION

The components of the Automatic Vehicle Identification System are a carborne Programmer Unit, Transponder Coil, and interconnecting cables; and the wayside-mounted Interrogator Unit, Decoder Logic Unit, and Wayside Coil.

Carborne Equipment

Programmer Unit

The Programmer Unit is a completely self-contained, solid state assembly. The assembly is housed in a rugged 2.5" x 4" x 7" sheet metal enclosure with integral mounting bracket designed for panel mounting in the motorman's cab.

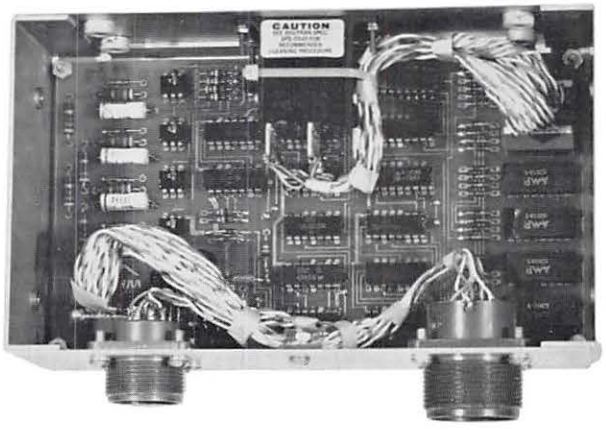

PROGRAMMER UNIT

The Programmer Unit generates 28 bits of binary data arranged to provide six decimal digit capacity and 4 external status inputs.

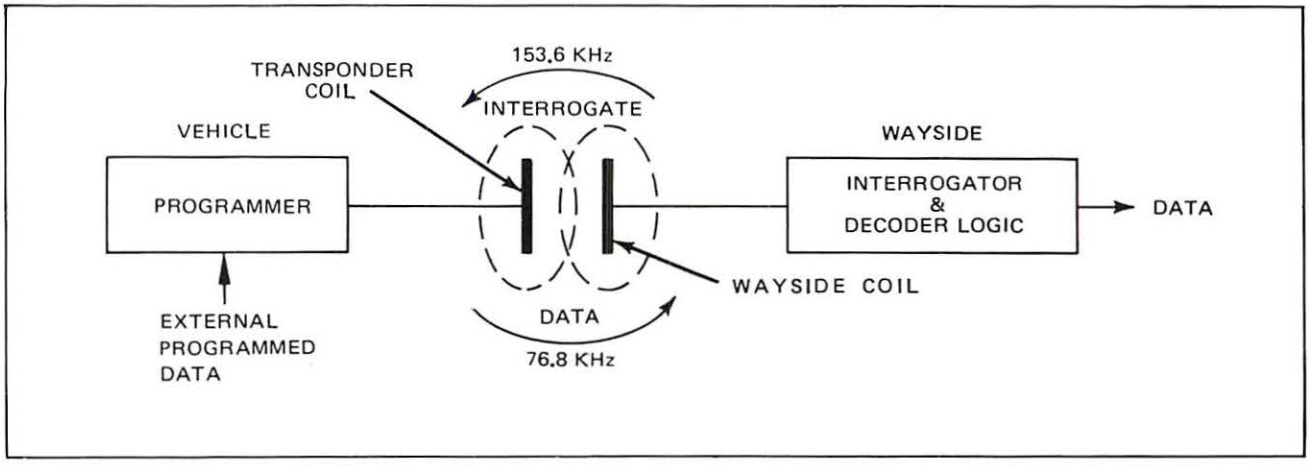

DIAGRAM A
OPERATION OF AVI SYSTEM

Two decimal digits (8 bits), controlled by front panel-mounted thumb-wheel switches, are provided for a two digit train destination number for routing or run number identification. Four decimal digits (16 bits), provided for car serial number, are programmed by positioning of switches internal to the Programmer Unit. The four remaining bits are provided as a spare or, if desired, for use in external variable data transmission. Other encoding combinations are possible to suit individual system requirements within the limits of the 28 bit message.

Connections between the Programmer Unit, Transponder Coil, and external data inputs are provided by two receptacles.

No connections are required between the Programmer Unit and the vehicle battery or other vehicle-mounted power source except for determining the status of input signals if external data entry is used. One receptacle provides for input and outputs from the Transponder Coil through the Programmer-to-Transponder Coil cable assembly. The second receptacle provides for external data inputs, if desired, through the use of the vehicle battery.

Transponder Coil

The Transponder Coil is a completely self-contained unit including two tuned coils, one for transmission and one for reception. The unit is encapsulated in a 12" x 12" x 2" weatherproof fiberglass package designed for mounting on the vehicle underbody. A supplemental coil frame is provided for mounting.

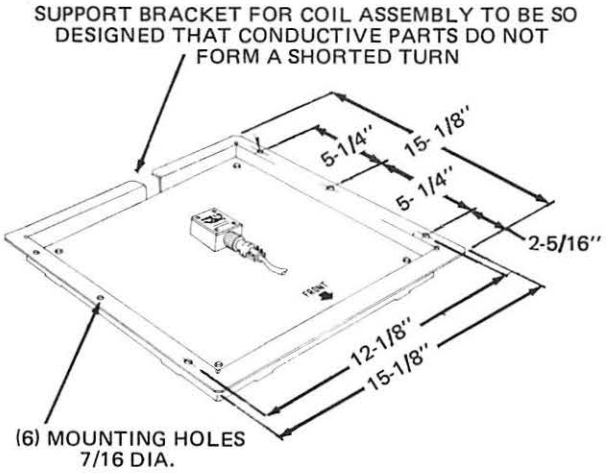

TRANSPONDER COIL

The carborne Transponder Coil provides for reception of a 153.6 KHz signal and transmission of programmed digital data over a 76.8 KHz carrier frequency. A signal from the Wayside Coil that initiates the data transmission sequence, is received by the Transponder Coil and sent to the Programmer to provide power to derive the timing signals necessary for properly sequencing the data transmission.

The Programmer generates the 76.8 KHz carrier frequency and modulates it with programmed digital data. The modulated 76.8 KHz carrier frequency is then routed to the Transponder Coil which provides for an inductive transmission path back to the Wayside Coil.

Wayside Equipment

Interrogator Unit

The Interrogator Unit, housed in a wayside enclosure, is a completely self-contained solid state unit designed for operation from a 120 or 240 vac, 60 Hz wayside power source.

The Interrogator Unit generates the 153.6 KHz signal, and receives and amplifies the incoming 76.8 KHz carrier frequency which is then routed to the Decoder Logic Unit.

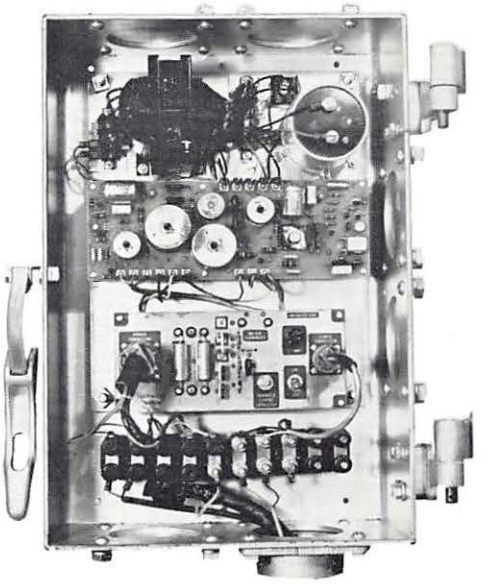

INTERROGATOR UNIT

Decoder Logic Unit

The Decoder Logic Unit, mounted on a 3-1/2" x 19" x 12" rack, is a completely self-contained solid state unit designed for operation from a 120 VAC, 60 Hz wayside power source. The unit may be located in the wayside enclosure or in a remote location (relay room) up to 5000 feet maximum.

The Decoder Logic Unit demodulates the 76.8 KHz signal to recover the data, performs BCH security checks on the incoming digital data and serves as an interface between the AVI system and a data set for re-transmission to remote data processing equipment.

Two configurations are available; one designed for serial data output to a data set for transmission to a central location, and another designed for automatic routing output having 20 separate relay contact outputs corresponding to 20 route selections.

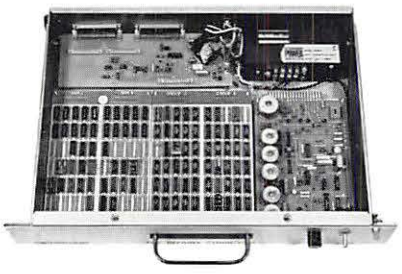

DECODER LOGIC UNIT

Wayside Coil

The Wayside Coil, encapsulated in a rugged 48" x 16" x 1-1/2" weatherproof molded fiberglass package designed for mounting between the rails, provides the transmission path to and from the vehicle-mounted Transponder Coil.

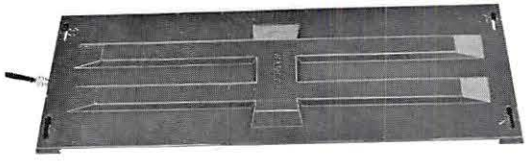

WAYSIDE COIL

MOUNTING DATA (See Block Diagram B)

Each component of the Automatic Vehicle Identification System provides maximum flexibility in mounting. The Programmer Unit is normally mounted in the console panel in the motorman's cab. The Transponder Coil is designed for mounting on the longitudinal centerline of the vehicle underbody, so as to provide a nominal 14" to 18" maximum spacing between the carborne and wayside coils, and a 6" minimum (typically 12") radial spacing between the unit and any metalic material of the car. See inset, Diagram B. The Interrogator Unit is designed for mounting in a weatherproof junction box. The Decoder Logic Unit is designed for rack mounting and must be located within 5000 feet of the Interrogator Unit. The Wayside Coil is designed for mounting in a position between the running rails.

APPLICATIONS

The Automatic Vehicle Identification System is an extremely versatile system and applications are numerous. Automatic routing and platform sign control are just two of the many applications. In conjunction with a display, or centrally bound computer, the system can provide for train-tracking capabilities. The system may also provide the data base for car mileage recording to improve maintenance and upkeep.

FEATURES

- High reliability — all solid-state components, vehicle-mounted equipment is active during a data transmission sequence only and requires no external power source.
- Ease of Installation — compact, space-saving units. No vehicle power connections required, except for status indications.
- Rugged — designed and built to withstand the severe conditions encountered in the railroad and transit environment.
- Ease of serviceability — solid-state module-type construction, replaceable printed circuit boards.
- Versatile — 7 digit (28 bits) capacity; including 2 thumbwheel switch programmable digits (8 bits), four internal switch programmable digits (16 bits), and 1 spare digit (4 bits) for data entry.

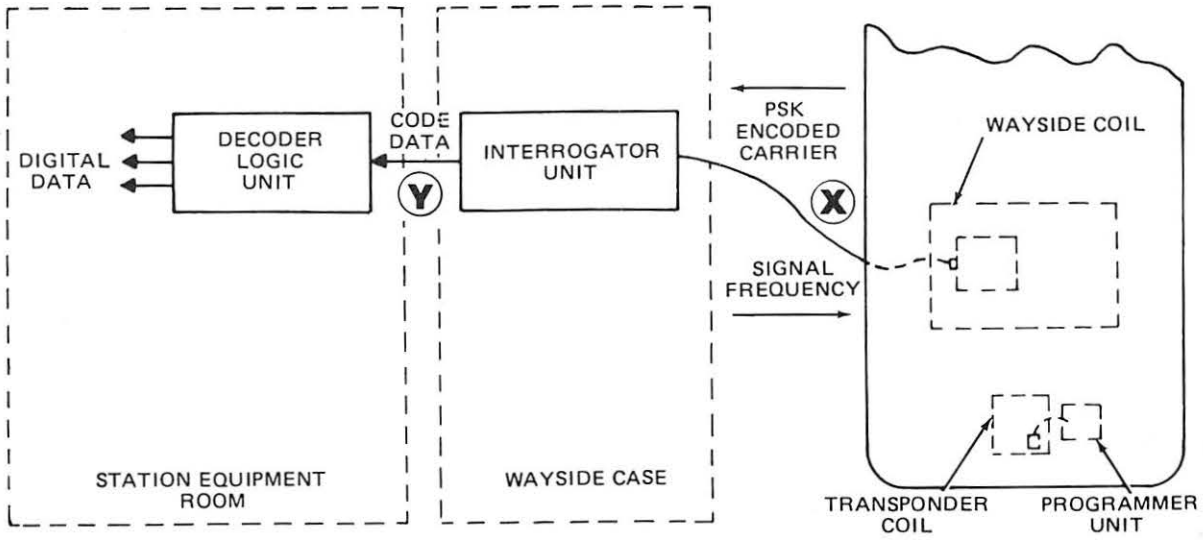

TOP VIEW

NOTE:

LENGTH OF CABLE (X) IS FIXED AT 30 FEET IN THE STANDARD CONFIGURATION SHOWN. LENGTH OF CABLE (Y) MAY BE UP TO 5000 FEET.

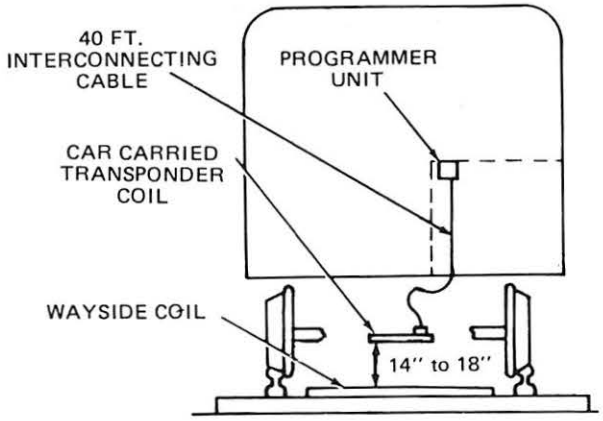

FRONT VIEW

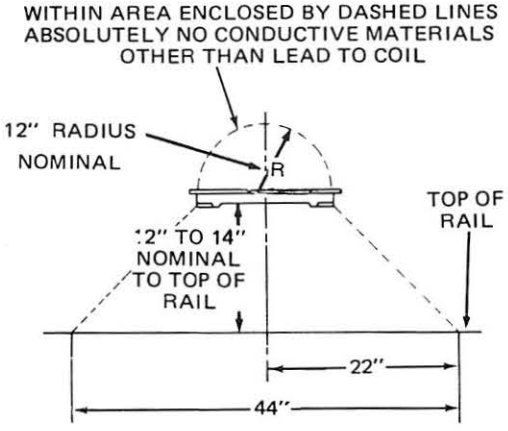

TRANSPONDER COIL MOUNTING CONSTRAINTS

DIAGRAM B
EQUIPMENT LOCATION

FUNCTIONAL SPECIFICATIONS

Transmission Range. . . . . 18" (45 cm) nominal
Between Coils . . . . . Absolute Range Limits — 0" to 24" (0 cm — 61 cm)
Data Capacity . . . . . 28 binary data bits (see programmer specifications for standard bit assignment)
Operating Temperature Range. . . . . -40°F to +158°F (-40°C to +70°C)

EQUIPMENT SPECIFICATIONS

Carborne Equipment

Transponder Coil:

Dimensions . . . . . .12" x 12" x 2" (0.3m x 0.3m x 5.0 cm) exclusive of mounting brackets
Weight. . . . . 7 lb-11 oz (3.5 kg)

Furnished with integral MS type connector for cable connection to programmer

Cable assembly — 2 twisted pairs with shield and MS connectors. Fixed length 40' (12.19 m), but can be supplied in other lengths upon request.

Programmer:

Dimensions . . . . . Approximately 2.5" x 4" x 7" (6.5 cm x 10 cm x 18 cm) exclusive of mounting brackets
Weight. . . . . 1 lb-4 oz (0.6 kg)
Terminations. . . . . One MS connector for interconnection to transponder and one MS connector for external data entry
Power Consumption . . . . . .none*
Data Format . . . . . 28 bits, standard configuration as follows (other configurations can be supplied upon request)
1st and 2nd 4 bit words. . . . . .BCD encoded numbers (0-2; 0-9) accessible via thumbwheel switches on front panel ("tens" and "units" route request)
3rd, 4th, 5th, 6th 4 bit words . . . . . Provides four (0-9) independently BCD encoded numbers. Digits each setable by means of internal switches. These digits may be programmed in the field to comprise a four digit (0000-9999) number or any other combination of four 0-9 digits.
7th 4 bit word. . . . . Provides four independently programmable bits, accessible via an MS connector. Each bit is interfaced to the external environment via an electro-optical interface. External battery is required to activate these data.*
Message Security and Synchronization . . . . . BCH error detection — 6 bits plus additional parity are transmitted as an integral part of the message. Twelve bit synchronization message.
Modulation . . . . . Bi-polar phase shift keying, 76.8 KHz carrier.

* External battery ≈ 5 ma @ 36V each external status input

Wayside Equipment

Interrogator:

Dimensions . . . . . Case mounted weatherproof unit 16-1/2" x 20" x 8-3/4" (42 cm x 51 cm x 22 cm) in depth
. . . . . .19" rack mounted unit 12" x 19" x 5" (30 cm x 48 cm x 13 cm) in depth
Power Consumption . . . . . .120 watts at 117 or 240 VAC, 60 Hz
Output Frequency. . . . . 153.6 KHz

Wayside Coil (Fiberglass encapsulated assembly intended for tie mounting):

Dimensions . . . . . 48" x 16" x 1-1/2" (1.22m x 0.4m x 3.8 cm in height)

Decoder-Logic Unit:

Dimensions . . . . . .(19" rack mounted unit) 3-1/2" x 19" x 12" (9 cm x 48 cm x 30 cm) in depth
Power Consumption . . . . . 12 watts at 117 VAC, 60 Hz
Data Inputs . . . . . .Accepts 76.8 KHz serially encoded PSK message from car-carried transponder
Data Outputs. . . . . .(1) Serial message format replicating valid carborne message EIA standard RS232C electrical interface. Message keying speed variable from 150 to 1200 baud.

(2) One of 20 decoded route number data output through connector (optional) via contact closure.

(3) ASCII serial interface (optional). 20 or 60 milliampere current loop and EIA standard RS232C electrical interface. Message keying speed variable from 75 to 9600 baud.

AUTOMATIC VEHICLE INDENTIFICATION SYSTEM

ORDERING INFORMATION

To order the basic components described in previous paragraphs, refer to the tabulation below. Ordering information for some conponents depends on application. These are indicated by an asterisk.

PART NO.	DESCRIPTION
	Carborne Equipment
N451465-0401*	PROGRAMMER UNIT
N451465-0501*	TRANSPONDER COIL
N451458-1101*	CABLE ASSEMBLY
	Wayside Equipment
N451465-0201	INTERROGATOR UNIT
N451465-0302	DECODER LOGIC UNIT
N451465-0301	DECODER LOGIC UNIT WITH ROUTE DECODED OUTPUTS
N451465-0601	DECODER LOGIC UNIT WITH ASCII SERIAL COMMUNICATION INTERFACE
J780026-0701*	WAYSIDE COIL
A434045	CABLE DIRECT BURIAL 30 FT. LENGTH
N451102-1101	INTERROGATOR EQUIPMENT CASE
	* Depends on Application

RETARDERS & YARD EQUIPMENT

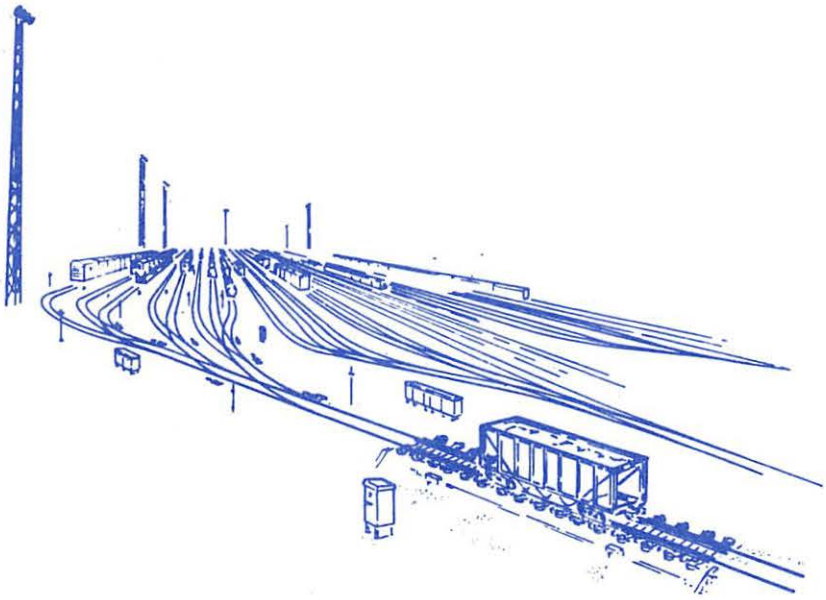

RSE-14

RETARDERS & YARD EQUIPMENT

RETARDERS

Model 67 Electro-Pneumatic Car Retarder RSE-14A1
Model 50-A Weight Proportional Car Retarder RSE-14A2
Model 50-B Car Retarder RSE-14A3

RETARDER VALVES

HS-2 Retarder Control Valve RSE-14B1
Type X-2 Exhaust Valve RSE-14B2

SKATES

Hand Skates RSE-14C1

KITS

Hevi Car Kit for Models 31 and 32 Car Retarders RSE-14D1
Short Stroke Kit for Models 31 and 32 Car Retarders RSE-14D2
Hydraulic Piston Accumulator RSE-14D3

WEIGHT DETECTION

Type IV Weigh Rail RSE-14E1

SPEED DETECTION

DR-40 Gunn Diode Doppler Radar Unit RSE-14F1

MODEL 67
ELECTO-PNEUMATIC CAR RETARDER

The Model 67 Electro-Pneumatic Car Retarder is a fast acting, variable-force retarder, for use in classification yards and industrial applications. It is designed to handle cars in excess of 160 tons, with its capability determined by its length and design of the hump, and offers up to 60% more retardation over other electro-pneumatic models. It can be sectionalized for greater versatility of control and applications.

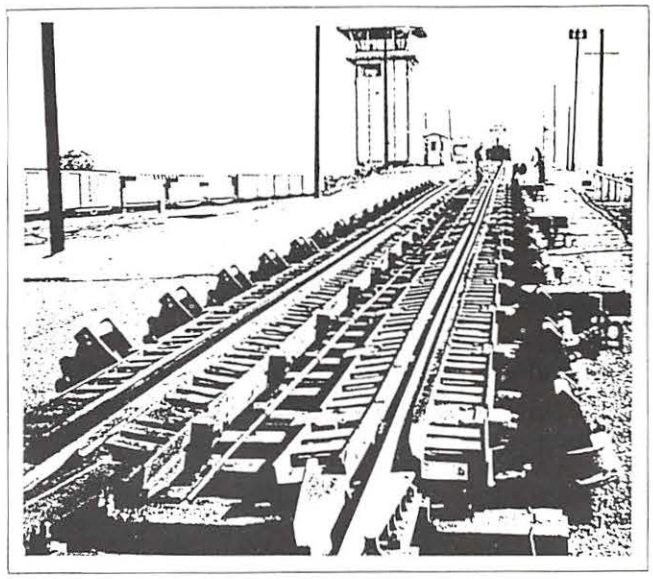

DESCRIPTION

The Model 67 Electro-Pneumatic Car Retarder components include; self-contained cylinder units, control valves, and brake beams. Each cylinder unit consists of a pneumatic cylinder (either 14-1/2" or 12" in diameter), upper and lower levers, and a common fulcrum pin around which all parts rotate. This arrangement insures low internal friction in the retarder and uniform application of pressure on both sides of the wheels, regardless of the spacing of the wheels on the axle.

The cylinder units are connected by articulated brake beams and brake shoes. The brake shoes are arranged to span the joint between adjacent brake beams, thus reducing shock and wear on the brake beams and levers. Guide rails are provided at the end of the retarder to prevent any car, which might be raised, from being derailed.

OPERATION

In a typical operation, with an air supply of 150 psig, a 14 cylinder Model 67 Retarder section equipped with an HS-2 Valve, can be closed in less than 0.25 second. Cylinder pressure can be raised from 0 to 50 psig in approximately 1 second.

Air is supplied to each cylinder through various pipes and hoses from control valves, which allow varying amounts of pressure to be applied or exhausted.

Shut off valves are provided in the air supply lines to each cylinder unit, so that any number of cylinders of a retarder section may be cut off without affecting the remainder. When air is vented from the cylinders, the upper lever, which carries the outside brake beam, moves to its open position by gravity. The lower lever, which carries the inside brake beam, moves to the open position through gravity and the combined effect of the lower lever return spring.

Free movement of the brake beams and shoes, allows them to adjust themselves to varying gages of car wheels. Wheel width has no effect on the amount of retardation, since force is applied directly through the levers by air pressure in the cylinders.

FEATURES

- Fast acting.
- Track circuits may be run through retarder.
- Interchangeable cylinder units.
- Reduced shock and wear on parts.
- Universal in application.
- Meets AAR standards.

PHYSICAL ARRANGEMENT

The Model 67 Car Retarder can be arranged as either a single- or double-rail retarder in 75-inch lengths. As a single rail retarder, it may be applied on the left or right rail, with the control valve on either side of the track. It may also be installed on a curve.

Control and piping are normally arranged so that one valve does not control more than 18 cylinders. Any number of sections may be arranged for automatic or manual control.

The accompanying layout drawing shows typical single and double rail installations.

APPLICATION

- Classification yards.
- Industrial applications.
- Automatic or manual operation.
- Single or double rail installation.
- Straight or curved track.
- Master or group retarder.

ORDERING INFORMATION

Consult your nearest US&S Sales Representative for ordering a Model 67 Car Retarder.

MODEL 67 CAR RETARDERS

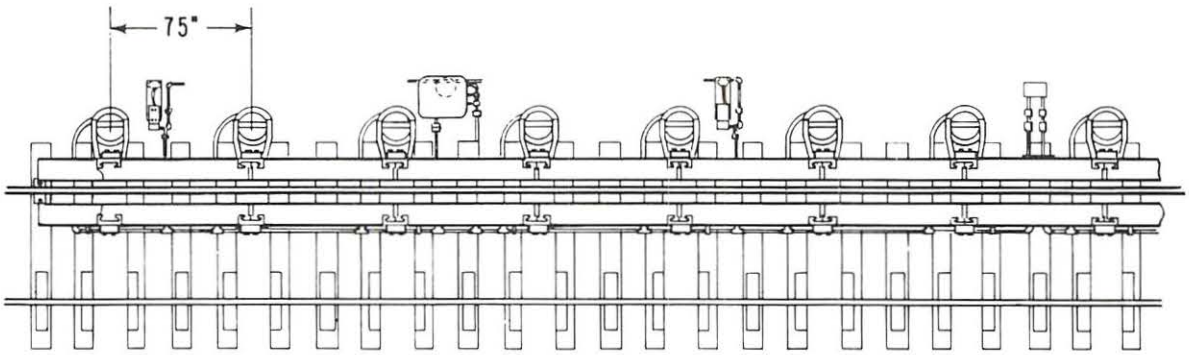

8 CYLINDER SINGLE RAIL CAR RETARDER

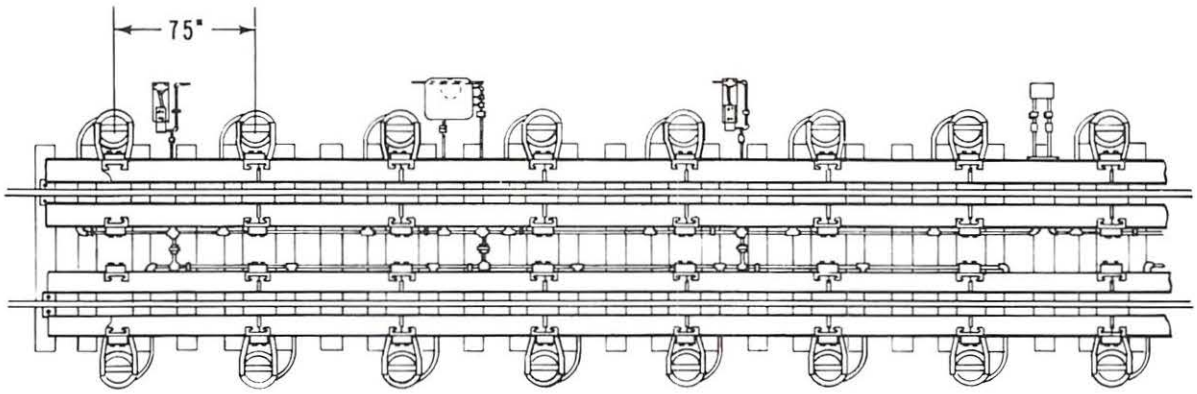

16 CYLINDER DOUBLE RAIL CAR RETARDER

NOTE: For complete detail parts and additional information, refer to service manual SM5313.

50-A WEIGHT PROPORTIONAL CAR RETARDER

The 50-A Car Retarder functions automatically with no external power source required, removing the same velocity head from all cars, regardless of weight. Its primary application is for stopping cars in freight classification yards at the end of the track, but is also applicable for "spotting" cars, or for use on grades. It is designed to handle 160 ton, 4 axle cars.

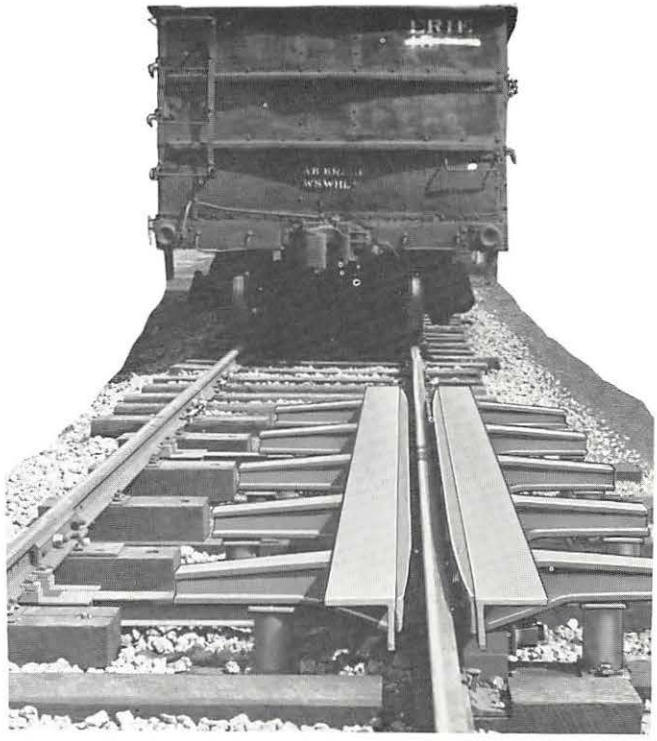

DESCRIPTION

The 50-A Car Retarder, as a weight proportional type of retarder, consists of two brake beams and shoes, a running rail, steel lever arms, stabilizer beams, and assorted hardware and fittings. The brake beams and shoes are bolted to the lever arms on each side of the running rail. The outer ends of the lever arms are supported on tie-mounted stools that permit a pivot action of the arms during retardation. The inner ends of the lever arms are connected together by a large hook bolt which passes beneath the running rail and supports it. The opening between the two brake beams without a car in the retarder is less than the narrowest car wheel.

OPERATION

The retarder will automatically actuate when a car wheel enters between the brake beams and spreads them (at least one brake beam is flared). The spreading action causes the levers to pivot at the outer ends and the running rail to lift. This lifting action in turn causes the weight of the car to be transmitted from the running rail to the brake beams, and retard action begins. Thus, the braking force is applied to the car wheels in direct proportion to the weight of the car, and the same velocity head removed. Car wheel width is not a factor in the amount of braking force, only the distance the running rail will lift.

APPLICATION

Single rail installations.
Install on straight track only.
End of track freight classification yards.
For "spotting" or grade use.
Where no power is available.

PHYSICAL ARRANGEMENT

The 50-A Car Retarder may be installed on standard ties utilizing running rails from 115 lb. R.E. to 132 lb. R.E. or equivalents. The entire mechanism mounts above the ties with 37-1/2" spacing between levers.

Lever sets of 5, 7, 9, 11, 13 and 15 are available to suit individual requirements. Typical 5 and 9 lever installations are shown on the layout drawing. A guard rail (not supplied) is recommended on all installations to provide added assurance against derailing.

FEATURES

- Positive automatic action.
- Non-derailing.
- No external power required.
- Easy to install and adjust.
- Removes same velocity head from all cars.
- Meets applicable AAR standards.

ORDERING INFORMATION

Consult your nearest US&S Sales Representative for ordering a 50-A Car Retarder.

UNION SWITCH & SIGNAL DIVISION
AMERICAN STANDARD INC. / SWISSVALE, PA 15218

RSE-14A2
3/73

PRINTED IN U.S.A.

MODEL 50-A CAR RETARDER

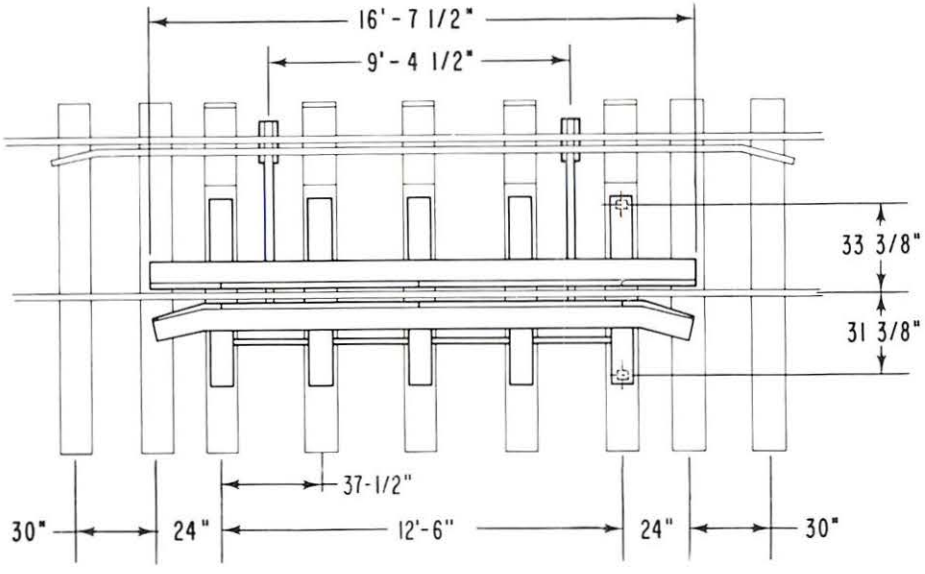

5 LEVER MODEL WITH STANDARD BRAKE SHOES

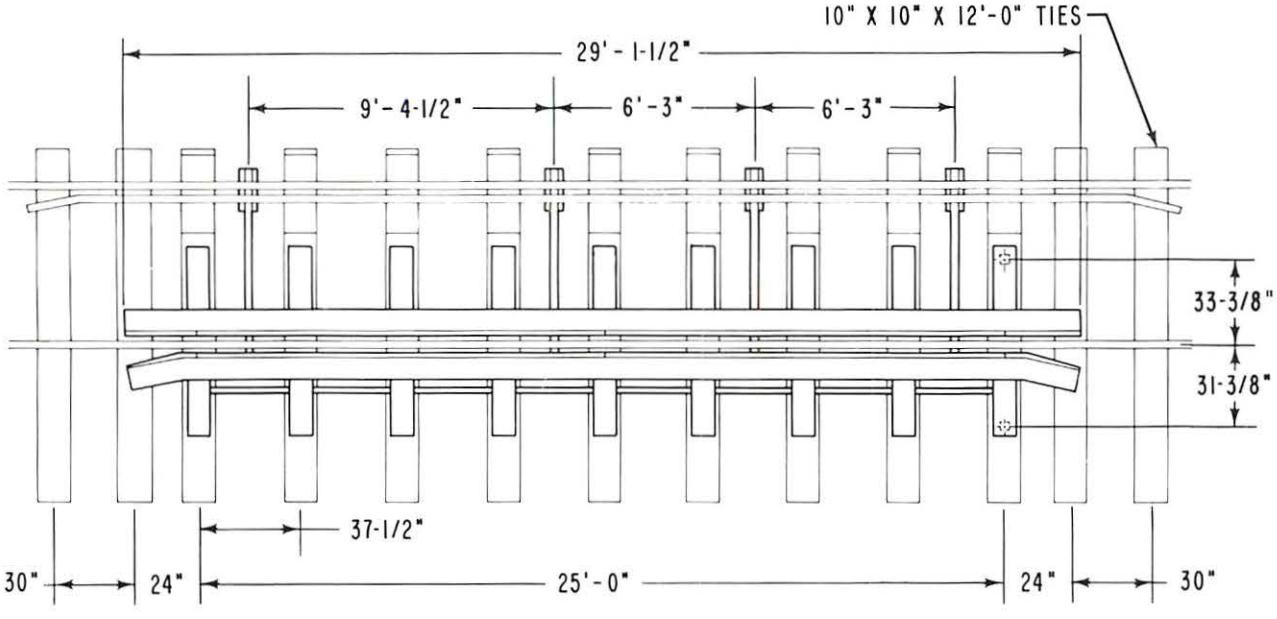

9 LEVER MODEL WITH STANDARD BRAKE SHOES (131 #R.E. RAIL)

50-B CAR RETARDER

The 50-B Car Retarder is an inexpensive, fast acting, hydraulic weight-proportional retarder for use in small and medium size classification yards, and industrial applications. It is designed to handle cars up to 160 tons.

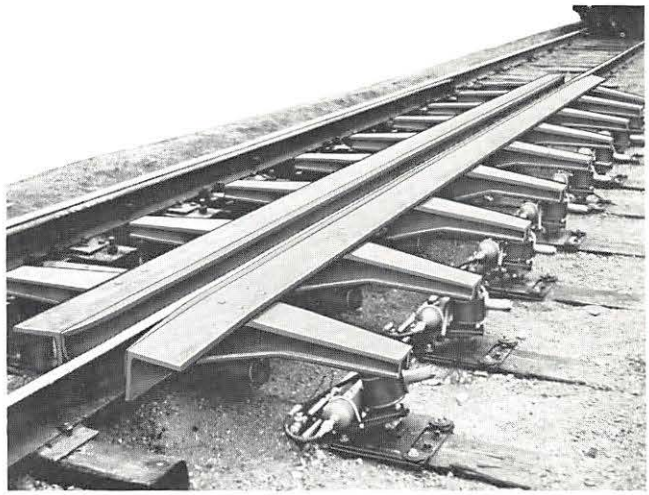

DESCRIPTION

The 50-B Car Retarder is an hydraulic weight-proportional car retarder with an electro-pneumatic control system. The control system allows for full retardation or no retardation as desired. The 50-B is available in 16'-7½" sections utilizing running rails from 115 lb. R.E. to 132 lb. R.E. or equivalents. The entire mechanism mounts on standard ties. The 50-B is used on single rail applications.

The hydraulic system consists of three basic elements: the ram, valve, and accumulator. The response time is less than 1/2 second from retard to non-retard.

The retarder consists of a pair of brake beams and shoes, situated on opposite sides of the running rail, and supported by pairs of steel lever arms. Lever sets of 5, 7, 9, 11, 13 and 15 are available to suit individual requirements. The arms connect to a pair of brackets that engage and support the running rail. The outer ends of the lever arms are pivotally supported by a tie mounted stool on one end, and by the piston of an hydraulic ram on the other end. Proper position and gauge of the running rail are maintained by stabilizer beams.

OPERATION

When in a normal position, retarder "closed" and no car present, a normally open air solenoid valve permits air to pass into an accumulator. Pressure in the accumulator forces hydraulic fluid through a check valve into the ram, raising the ram piston to the normal closed retarder position. When a car enters the retarder, the brake shoes are spread by the car wheel, forcing the running rail to rise from the tie plate, and the weight of the car is transmitted from the running rail to the brake shoe beams. The braking force is then proportional to the weight of the car. Width of the car wheel has no effect on braking force.

When no retardation is desired, or if a car has been "stopped" in the retarder and a "snap-open" release is called for, the hydraulic pressure is removed by energizing the air and hydraulic solenoid valves. This removes air from the accumulator, allowing the hydraulic fluid to flow back into the accumulator, causing the ram to lower, and the retarder is then "open".

FEATURES

- Eliminates need for skatemen.
- Prevents cut "Push-out".
- Unitized independent hydraulic for each lever.
- Low maintenance—easy adjustment.
- Optional "helper" springs.
- Extremely fast acting.
- Meets AAR standards.

PHYSICAL ARRANGEMENT

The 50-B Car Retarder mounts on standard ties, with the entire mechanism above the ties. Various lengths may be installed from the basic 5 lever set (16'-7½") to a 15 lever set maximum, in increments of 2. Hydraulic units will equal the number of lever sets in any given installation. Guard rails (not supplied) are recommended to provide added assurance against derailing.

APPLICATION

The 50-B Car Retarder has been designed for industrial applications, small and medium size automatic classification yards, thru-traffic areas, and grade stopping points.

MODEL 50-B CAR RETARDER
9 LEVER MODEL

ORDERING INFORMATION

Consult your nearest US&S Sales Representative for ordering Model 50-B Car Retarders.

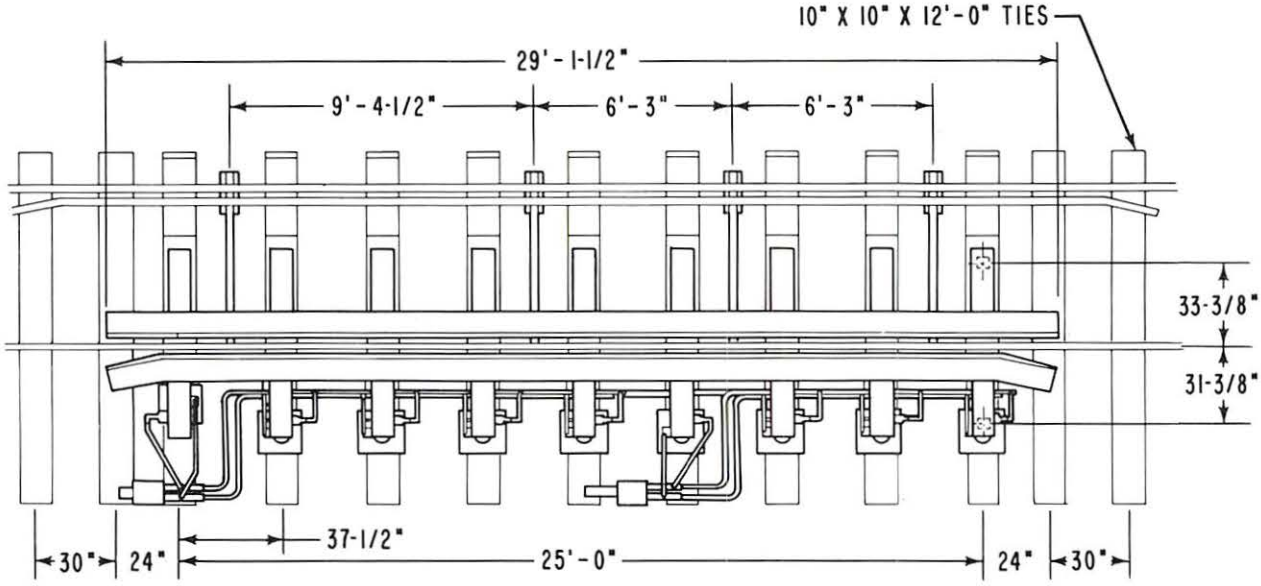

NOTE: For detail parts and additional information, refer to service manuals SM5796, 5796-A, and 5796-B.

ELECTRO-PNEUMATIC CAR RETARDER MODEL 81

The Model 81 Electro-Pneumatic Car Retarder is a fast acting operable retarder for use in classification yards and industrial applications. It is designed to handle cars, of all weights, with its capability determined by its length and design of the hump, and offers 10% more retardation than the Model 67 Retarder. It can be sectionalized for greater versatility of control and applications.

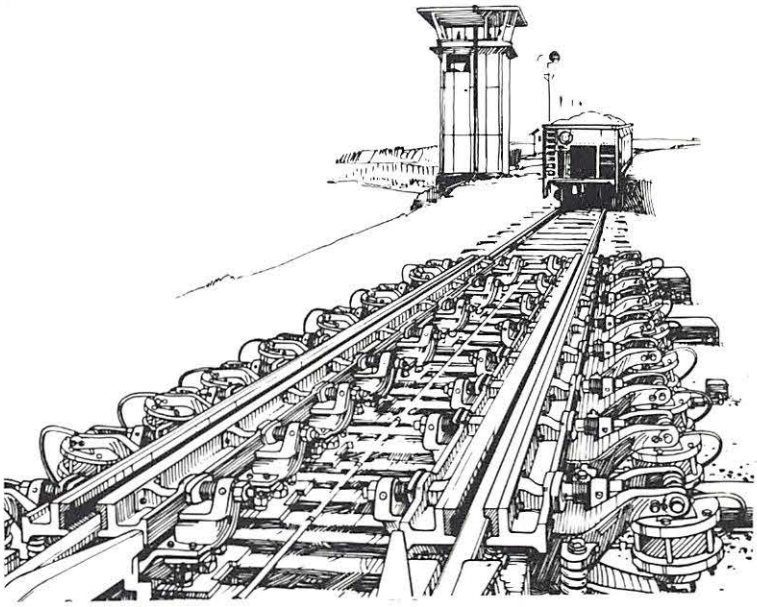

DESCRIPTION

The Model 81 Electro-Pneumatic Car Retarder components include: self-contained cylinder units, control valves, and brake beams. Each cylinder consists of a pneumatic cylinder (either 14-1/2" or 12" in diameter), upper and lower levers, and a common fulcrum pin around which all parts rotate. This arrangement insures low internal friction in the retarder and uniform application of pressure on both sides of the wheels, regardless of the spacing of the wheels on the axle.

The cylinder units are connected by articulated brake beams and brake shoes. The brake shoes are arranged to span the joint between adjacent brake beams, thus reducing shock and wear on the brake beams and levers. Guide rails are provided at the ends of the retarder to prevent any car, which might be raised, from being derailed.

Cylinders

Cylinder assemblies are of tie rod construction for ease of maintenance. Top and bottom cylinder heads and the piston rod are of cast construction. The replaceable cylinder body is made of fiberglass, complete with lubrication impregnated into the inside diameter. A nylon cushion ring is part of the piston assembly to prevent cylinder wall scoring. Cylinders may be disassembled in the field enabling maintenance men to rebuild retarder cylinder assemblies without sending them to the shop. Cylinders are available in two diameters: 12" and 14-1/2".

Construction

Operating levers and brake beams are of cast steel construction. The upper levers are 4-3/4" lower at their uppermost extremity, which provides improved clearance for rolling stock. The use of self-lubricating bearings throughout the assembly will reduce required maintenance scheduling.

FEATURES

- 10% more retardation than the Model 67 Retarder.
- Tie rod cylinder construction with replaceable fiberglass cylinder and nylon cushion rings for longer wear and easy rebuilding.
- Self-lubricating bearings provide longer service life and less maintenance.
- Cast steel construction for longer life.
- 4-3/4" lower profile and more vertical cylinder position offers lower probality of interference with rolling stock.
- Brake beam adjustment screws eliminate shimming of shoes.

PRINTED IN U.S.A.

Retardation is accomplished through pressure of a brake shoe against the car wheels. Adjustable brake beam adjusting screws compensate for brake shoe wear; shimming has been eliminated. The brake shoes have been raised 1/4" which will provide more retardation.

The Model 81 is universal in application; that is, the same parts and assembly may be applied to either a right-hand or left-hand layout. Control valves may also be installed on either the righ or left.

The air line is the only metallic connection between the two sides of the retarder. By insulating (through the use of rubber hose), track circuits may be run through the retarder. Track circuits may be terminated within the retarder by installing an insulated rail joint and two pairs or right- and left-hand end brake beams. Where a number of successive track circuits are required in the retarder, the retarder can be furnished with insulated rail supports, in which case, the shoes and beams are continous beyond the insulated joint separating the track circuits.

The Model 81 retarder is not interchangeable with any of its predecessors; however, the tie spacing and mounting dimensions are the same. In addition, wearing components such as brake shoes and cylinder packings are the same as used on all previous retarders. Yards equipped with Models 31, 32, 66, or 67 retarders can be gradually converted to Model 81 retarders in routine maintenance programs. This is accomplished by providing beam breaks between the Model 81 and the older model retarder sections.

OPERATION

Air to each cylinder is supplied through pipes and hose connections to the retarder cylinders from a remotely-controlled valve providing varying pressure as needed. Air entering the cylinder actuates the operating arms causing the brake beams to engage the car wheel in a manner similar to the action of a pair of pliers. When air is vented from the cylinder, the upper arm carrying the outside brake beam moves to the open position by gravity. The lower arm opens partly by gravity and partly by the action of a lower arm return spring. Operating arms and cylinder assembly rotate on a single fulcrum pin for positioning the brake shoes. When the retarder is in the closed position, brake shoes adjust themselves to the vary gage of the car wheels. Wheel width has no effect on the amount of retardation. When the retarder is in the open position, brake shoes open and cars pass freely through the retarder.

Air pressure in the cylinders can be increased or decreased as desired, with the car in the retarder. The resultant change in retardation takes place almost instantaneously and without the movement of any part. The relative movement of parts when the retarder is operating is extremely small. Brake shoes are arranged to span the joint between adjacent brake beam sections, resulting in cars being retarded smoothly, thus reducing the shock and wear on car retarder parts.

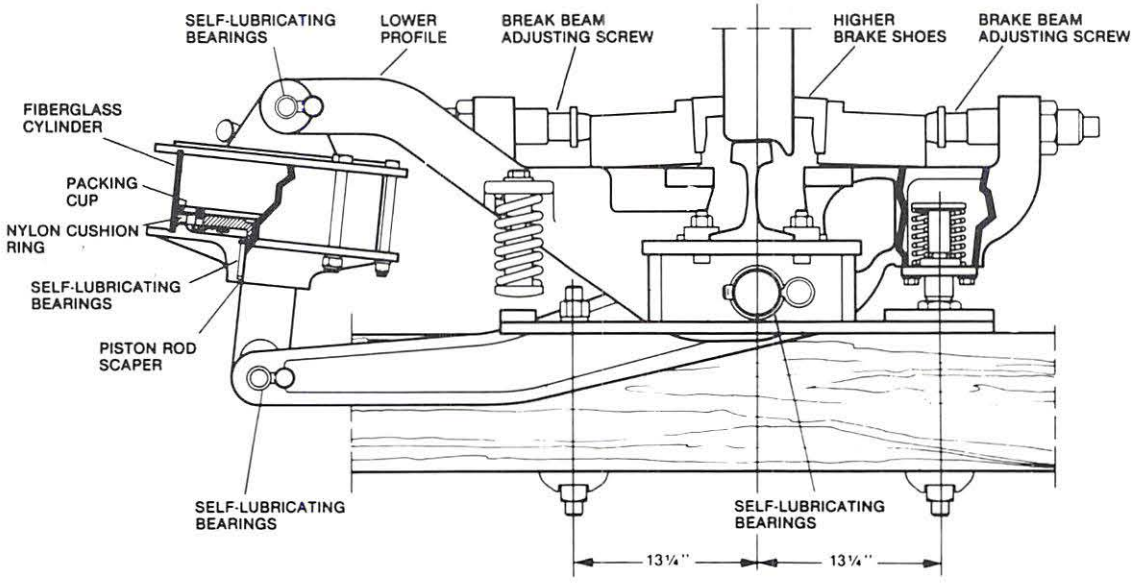

PHYSICAL ARRANGEMENT

The Model 81 car retarder can be arranged as either a single or double rail retarder of any length in 75" increments. As a single rail retarder, it may be applied on the left or right rail, with the control valve on either side of the track. The Model 81 can also be installed on a curve and it may be used as either a master or group retarder in classification yards.

Control valves are arranged so that no valve controls more than 18 cylinders. Any number of sections may be operated either automatically or manually.

TYPICAL LAYOUTS FOR MODEL 81 CAR RETARDERS

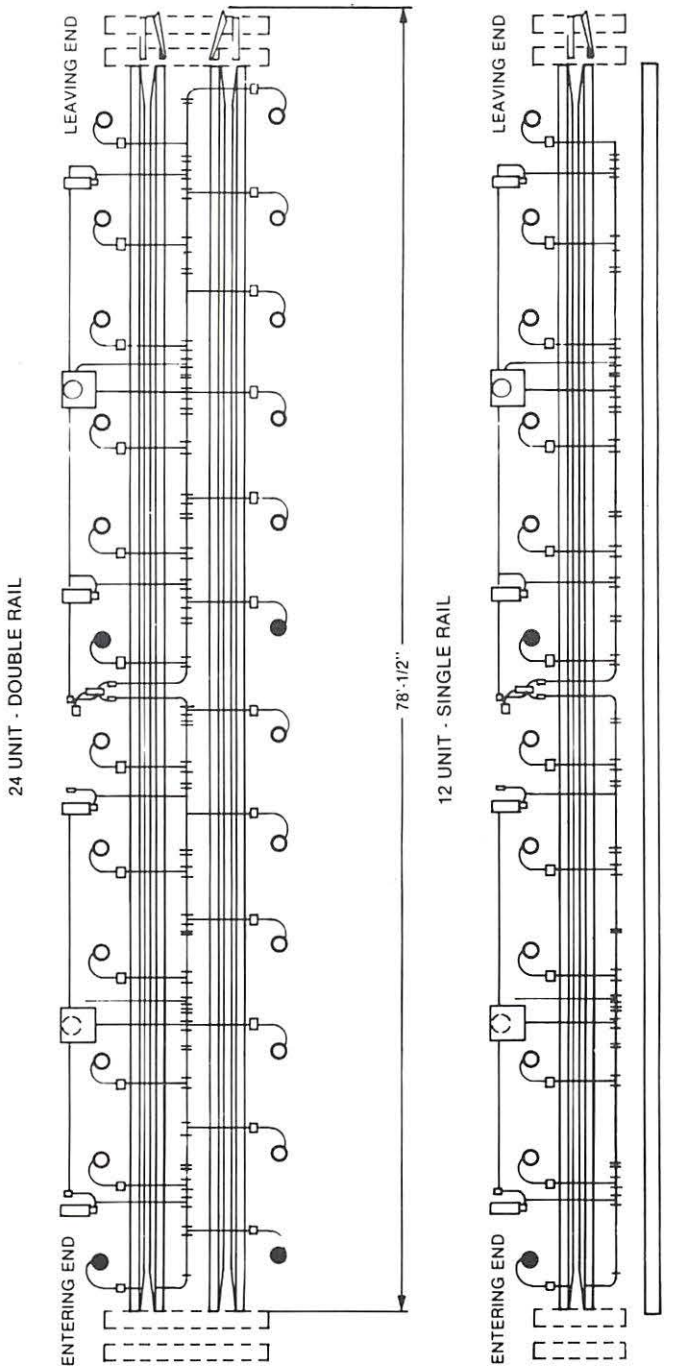

LEGEND

14-1/2" diameter cylinders

12" diameter cylinders

Operating air pressure should not exceed 150 PSIG.

ORDERING INFORMATION

To order a Model 81 Car Retarder, consult you nearest US&S representative.

NOTE: For complete detail parts list and additional information, refer to service manual SM6256.

HS-2 RETARDER CONTROL VALVE

The HS-2 Retarder Control Valve is a solenoid actuated, high-speed device for controlling air pressure in electro-pneumatic car retarders. HS-2 valves are readily adaptable for use with automatic or manual controllers.

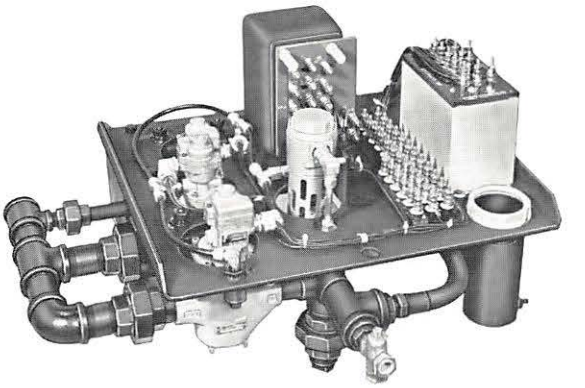

PART NO.	N451132-0101

DESCRIPTION

The HS-2 Retarder Control Valve is an assembly, consisting of two solenoid operated inlet valves, one solenoid operated exhaust valve, and a Bourdon tube pressure regulator. Other components include: an air filter for screening out oil and dirt, a terminal board, and an arc supressor for reducing arcing and burning of the pressure regulator contacts during operation.

Both inlet and exhaust valves are the poppet type, two-way, normally closed, directional valves. One inlet valve is 1-1/2" pipe size, the other 3/4" pipe size. The exhaust valve is 1-1/2" pipe size and identical to the larger inlet valve. In certain installations the exhaust valve is used in conjunction with an auxiliary exhaust valve to exhaust the cylinders more rapidly. The auxiliary exhaust valve is a US&S Type "X-2" (see RSE-14B2) and is identical to the inlet and exhaust valves of the HS-2 Retarder Control Valve.

Bourdon tubes are used in the pressure regulator which controls the air for retarder standby, preset, and ceiling pressures. Contact tips on the Bourdon tube work between an admission and an exhaust contact screw. Adjustment of these screws sets the desired operating pressure.

OPERATION

The HS-2 Valve functions as the control for car retarder cylinders, determining the amount of pressure (retardation), either selected by the automatic classification system or manually. The valve is remotely controlled from an operator's console by a lever with four position settings: Automatic, Heavy, Light, and Off.

When in the manual setting for "Heavy", "Light" and "Off" operation, the operator determines the degree of retardation or no retardation.

The automatic position allows the cars to be retarded at a value determined by automatic classification equipment, and varying air pressures, bringing the cars to a pre-selected speed or to a stop as desired.

The valve can be mounted on a concrete foundation. All electric connections are made to a terminal board located inside the cover assembly.

SPECIFICATIONS

Operating supply pressure limits ..... 80 psi min., 150 psi max.

Solenoid voltage ..... 14 vdc min., 24 vdc max.

FEATURES

- High-speed operation.
- Independently variable outlet pressures.
- Equipped with Bourdon tube pressure regulators.
- Equipped with arc supression unit.
- Self lubricating.
- Virtually maintenance-free operation.

NOTE: For detail parts and additional information, refer to service manual SM5311.

TYPE X-2 EXHAUST VALVE

The Type X-2 Exhaust Valve is a remotely controlled, highly reliable, solenoid operated valve capable of operating at pressures up to 150 psi.

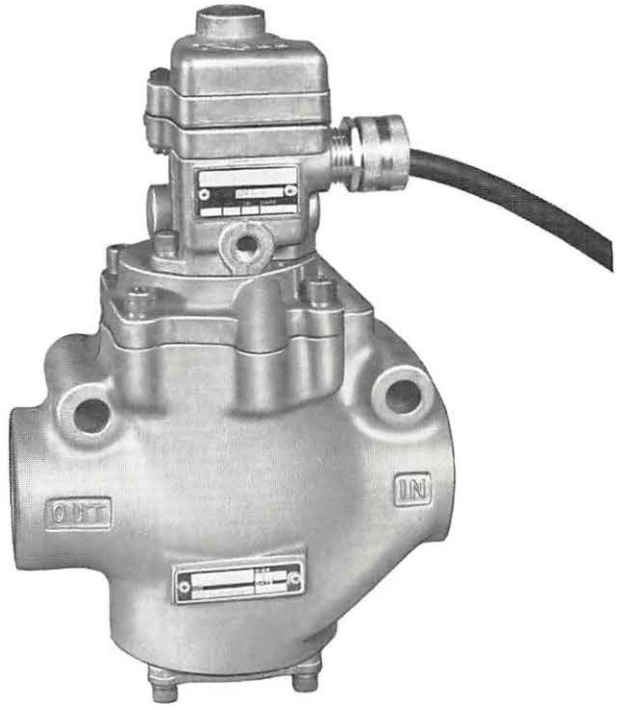

DESCRIPTION

The type X-2 Exhaust Valve is used in conjunction with a Type HS-2 Retarder Control Valve to reduce the exhaust time of equipment. Operating supply pressure limits: 80 psi minimum; 150 psi maximum. Solenoid voltage: 14 vdc minimum; 24 vdc maximum.

The Type X-2 Exhaust Valve ia a two-way, 1-1/2" poppet type, normally closed directional valve which is operated by a solenoid. The valve consists of a pilot and solenoid assembly and a valve body assembly. The pilot and solenoid assembly mounts on top of the valve body assembly and is easily removed for inspection and service.

The solenoid controls the flow of air to a shifing piston which is moved to its open position by the force of the pilot air into the valve. When the shifting piston is in its open position, air is exhausted from the equipment. When the solenoid is de-energized, the pilot air pressure is removed, returning the shifting piston to its closed position.

FEATURES

- Rugged.
- Reliable.
- Easy to service and maintain.
- Improves exhaust time when used with HS-2 Retarder Control Valve.

MOUNTING

The valve can be mounted on a concrete foundation or cast iron foundation. All electrical connections are made to a terminal board located inside the cover assembly.

PART NO.	DESCRIPTION
N451133-0701	TYPE X-2 EXHAUST VALVE.

UNION SWITCH & SIGNAL DIVISION
AMERICAN STANDARD INC. / SWISSVALE, PA 15218

RSE-14B2
10/72

PRINTED IN U.S.A.

HAND SKATES

Hand Skates provide effective stopping action for rolling cars in classification yards and similar areas. These Hand Skates are rugged, portable devices designed to fit all rail sizes with the same uniform performance. Two types are available: a one-piece Hand Skate or a Hand Skate assembly with replaceable tail.

HAND SKATE WITH REPLACEABLE TAIL

PART NO. N301489

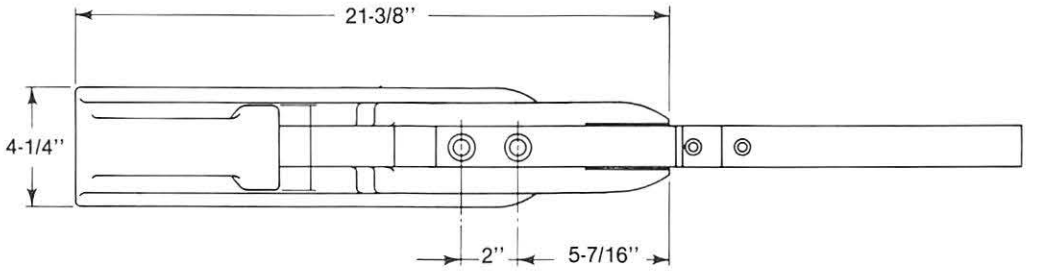

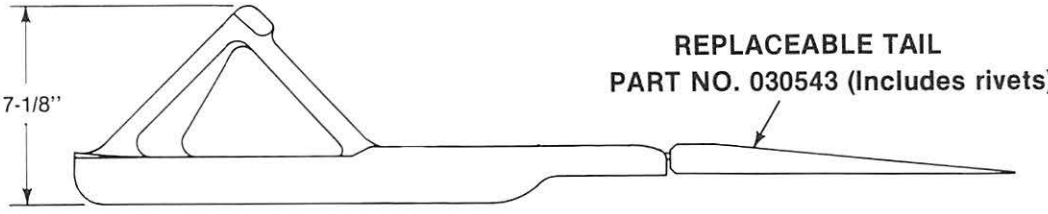

REPLACEABLE TAIL
PART NO. 030543 (Includes rivets)

ONE PIECE HAND SKATE

PART NO. J725310

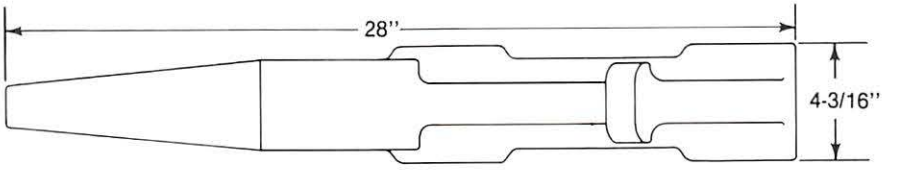

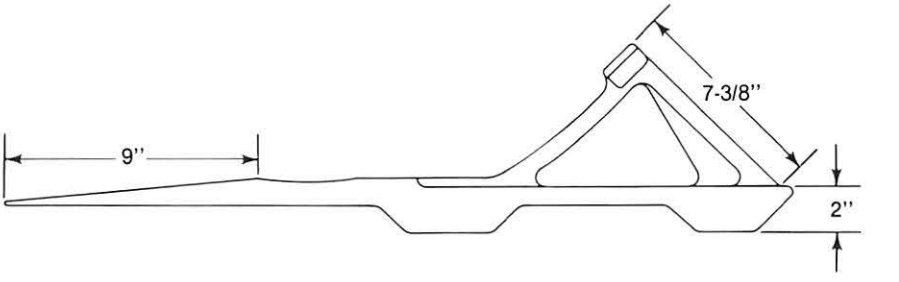

HEVI CAR KIT
FOR MODELS 31 AND 32 CAR RETARDERS

The U S & S Hevi Car Kit will quickly, easily, and economically convert your present U S & S Models 31 and 32 Car Retarders so that they can handle heavier cars. Existing retarders can be modified to provide increased forces necessary to control retardation of cars up to 160 ton gross weight on four axle trucks with wheels of 38-inch diameter.

With existing air pressure, new cylinders will produce 46% increase in retarding force. A maximum increase to 60% can be made by adjusting air pressure to 120 pounds per square inch gauge.

The Hevi Car Kit can be used with any existing Model 31 or 32 retarder control systems.

DESCRIPTION

The Hevi Car Kit consists of a 14-1/2-inch diameter, short stroke cylinder to replace existing 12-inch cylinders. Included in the kit are new upper lever springs and bolts.

APPLICATION

The kit is designed for use in existing yards. In addition to installing the kit it is necessary to:

1. Replace existing 9-1/2-inch cylinders at the entering end of the retarder with the replaced 12-inch cylinders.

2. Modify the 12-inch entering end cylinders to incorporate short-stroke features.

A kit is available for this modification (see Ordering Information).

Other changes that might be required are: pressure settings to compensate for retarder forces on cars of light and medium weight to prevent squeeze out; and modification of weigh rail and weight transfer circuits for semi-automatic, or automatic yards, to include the ability to detect and act upon the added heavy car weight category. Also recommended is a strengthing of the lower levers in high stress areas because of increased pressures. Consult your Union Switch & Signal representative for further information.

FEATURES

- No yard downtime — can convert one retarder section at a time.

- Fewer retarders needed — existing retarders modified will handle all heavier cars.

- No additional compressors required — new short stroke design permits use of existing air supply.

- Use of present valving — no need for additional valving, existing retarder control valves can be used.

- Automatically handles all types of yard traffic — no need for manual classification of heavier cars, or the use of "Make-do" equipment.

See back of this page for details and ordering information.

HEVI CAR KIT FOR MODELS 31 AND 32 CAR RETARDERS

ORDERING INFORMATION

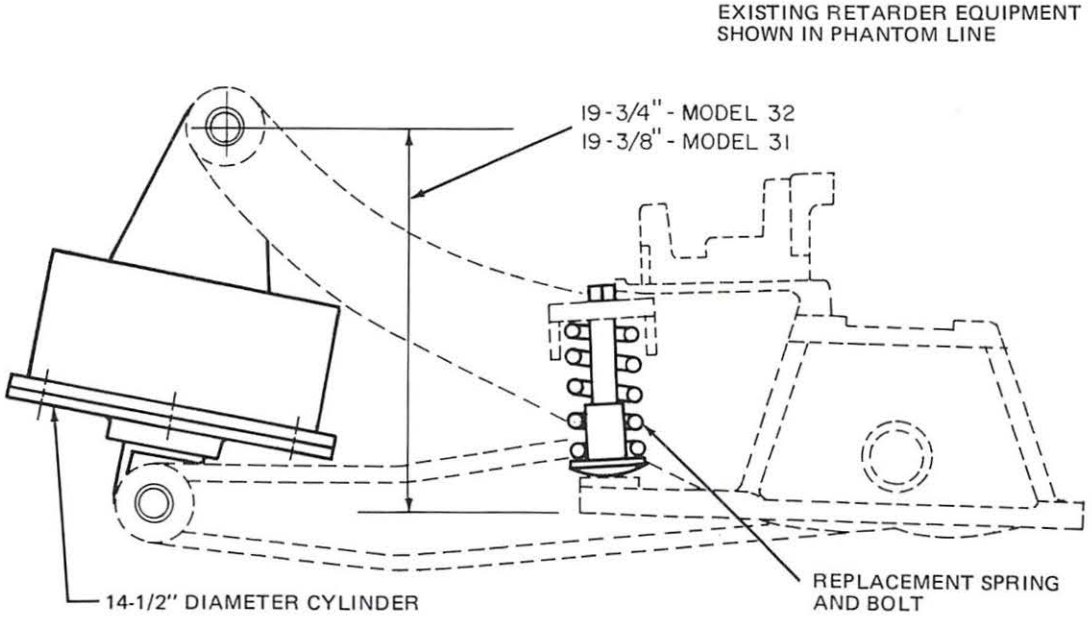

PART NO.	DESCRIPTION
X392545-001	HEVI CAR KIT, one 14-1/2-inch diameter welded pneumatic cylinder, 2 lever springs, 2 bolts and lock washers.
X432109	MODIFICATION KIT, for short-stroke reused 12-inch diameter cylinder. One piston follower, 2 springs, 2 bolts, and miscellaneous hardware (not shown).

SHORT STROKE KIT
FOR MODELS 31 AND 32 CAR RETARDERS

U S & S's Short Stroke Kit now enables you to quickly, easily, and economically convert your existing Models 31 and 32 Car Retarders for short stroke operation. Installation of this kit reduces the present 6-inch cylinder stroke to 3-3/8 inches. This change is made possible because the present brake shoe opening of 7 inches can now be reduced to 6 inches.

Utilization of the Short Stroke Kit results in improved equipment response, and greater savings of air. Up to 44% savings of air per cylinder, or a 35% savings of air per 12 cylinder retarder can be realized. This in turn means that the size of compressor plants can be reduced by approximately one-third, affecting additional cost reduction.

DESCRIPTION

Two kits are available; one for modifying existing cylinders, the other for replacing existing cylinders. The modification kit consists of a 9-1/2 inch, or 12-inch, piston follower to replace the existing piston follower, and new upper lever springs and bolts. Each retarder cylinder must be disassembled to change out the piston follower.

The kit for replacing existing cylinders consists of the new short stroke cylinders, new upper lever springs, and bolts.

FEATURES

- Nc yard downtime — can convert one retarder section at a time.
- Reduces air requirements — a savings of 44% per cylinder unit, and 35% per 12 cylinder retarder.
- Improved equipment response — resulting from shorter stroke.
- Reduced air compressor size — air compressor plants can be reduced by as much as one-third.

See back of this page for details and ordering information.

REPLACEMENT CYLINDER ASSEMBLY FOR SHORT STROKE OPERATION

ORDERING INFORMATION

To replace the existing 6-inch stroke cylinder assembly with the 3-3/8 inch stroke cylinder assembly, order 9-1/2 or 12-inch cylinder and piston follower from the tabulation below. Each order must include the bolt and spring (2 required for each cylinder assembly).

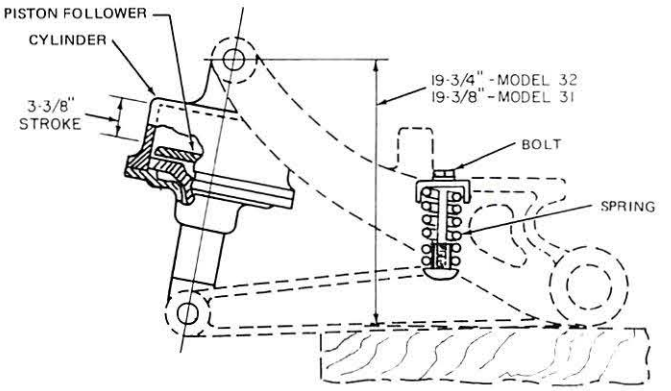

PART NO.	DESCRIPTION
N392145	9-1/2 IN. CYLINDER
M194385	9-1/2 IN. PISTON FOLLOWER
N392144	12 IN. CYLINDER
M189107	12 IN. PISTON FOLLOWER
M209350	BOLT (2 Req'd)
J068737	SPRING (2 Req'd)

MODIFIED CYLINDER ASSEMBLY FOR SHORT STROKE OPERATION

ORDERING INFORMATION

To modify the existing 6-inch stroke cylinders to 3-3/8 inch stroke, order the appropriate piston follower for the 9-1/2 or 12-inch cylinder from the tabulation below. Each order must include the bolt and spring (2 required for each cylinder assembly).

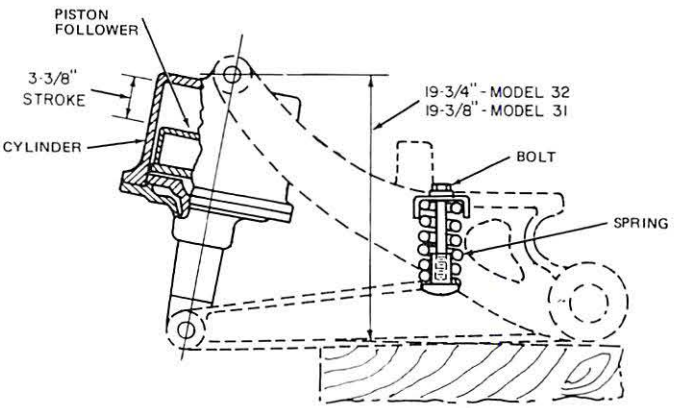

PART NO.	DESCRIPTION
M392949	9-1/2 IN. PISTON FOLLOWER, for use with 9-1/2 in. cylinder N393011.
M392950	12 IN. PISTON FOLLOWER, for use with 12 in. cylinder N393012.
M209350	BOLT, for 9-1/2 or 12 in. cylinder. (2 Req'd)
J068737	SPRING, for 9-1/2 or 12 in. cylinder. (2 Req'd)

HYDRAULIC PISTON ACCUMULATOR

Model 50B Car Retarder

The Hydraulic piston accumulator was developed to replace bladder type accumulators used on US&S Model 50B Retarders. Its function is to operate the power ram which opens or closes the retarder.

It consists of an aluminum piston assembly operating in a honed and chromed cylinder. Non-metallic wear rings provide precise piston to cylinder contact providing adequate wiping action. Fluid volume of the accumulator is one quart of hydraulic fluid. The end caps are an anodized aluminum alloy secured with cadmium plated tie rods to resist corrosion.

CONVERSION KIT

To upgrade the performance of your system, or when replacing accumulators in Model 50B Retarders, US&S now offers an easy to install conversion kit. The US&S Piston Accumulator is supplied with mounting brackets as an integral part of the unit and is shipped with the proper hardware for fast replacement, including the swivel fitting for connecting to the hydraulic system. Complete instructions for bleeding and refilling the hydraulic system are supplied when ordering the conversion kit.

FEATURES & BENEFITS

- Wide operating temperature range; −40°F to +165°F.
- Large Fluid Capacity - 60 cubic inches, offers greater safety.
- Chromed cylinder bore for longer life.
- Use of non-metallic, non-scoring wear rings reduces maintenance costs.
- Piston design eliminates bladder ruptures.
- Use of standard, readily available "O" Rings and "T" Seals simplifies repairs.

HYDRAULIC PISTON ACCUMULATOR

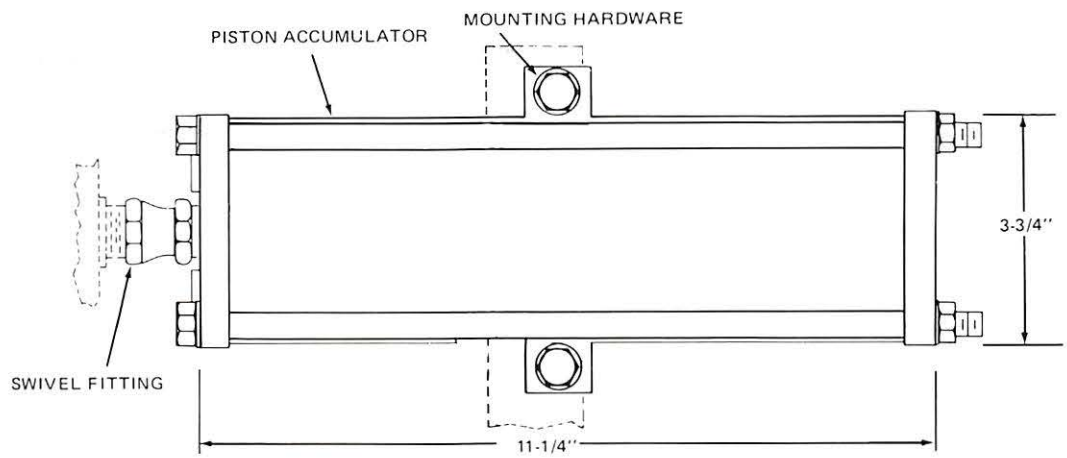

DESCRIPTION	PART NO.
PISTON ACCUMULATOR with Mounting Bracket	N451388-3301

DESCRIPTION	PART NO.
PISTON ACCUMULATOR CONVERSION KIT	X451017-8003

PRINTED IN U.S.A.

UNION SWITCH & SIGNAL DIVISION
AMERICAN STANDARD INC. / SWISSVALE, PA 15218

RSE-14D3
3/81

MINI-CARE CYLINDER REPLACEMENT KITS FOR EXISTING RETARDERS

US&S offers Mini-Care Cylinder Kits that allow you to upgrade your present retarders for improved perfomance in car retardation and less maintenance. Mini-Care Cylinder Kits are available in 12" and 14½" diameter cylinders with a 3-3/8" stroke. Mini-Care Kits will quickly, easily, and economically upgrade your present US&S Models 31, 32, 66, and 67 Retarders to today's standards.

DESCRIPTION

Four kits are available: two kits are for replacing cylinders with a 3-3/8" stroke and two kits are for replacing cylinders with a 6" stroke. Replacement cylinders are available in both 12" and 14-1/2" diameters. For a complete description of the cylinders, refer to catalog section RSE-14A4, dated 3/83.

The kits for replacing cylinders with 3-3/8" stroke consist of a complete cylinder plus upper and lower chrome-plated lever pins. The kits for replacing cylinders with a 6"stroke also include two springs, two bolts, two retaining rings, and two nuts. The parts of the kits are shown by the accompanying diagram. There installed relationship is shown on the back page along with ordering information.

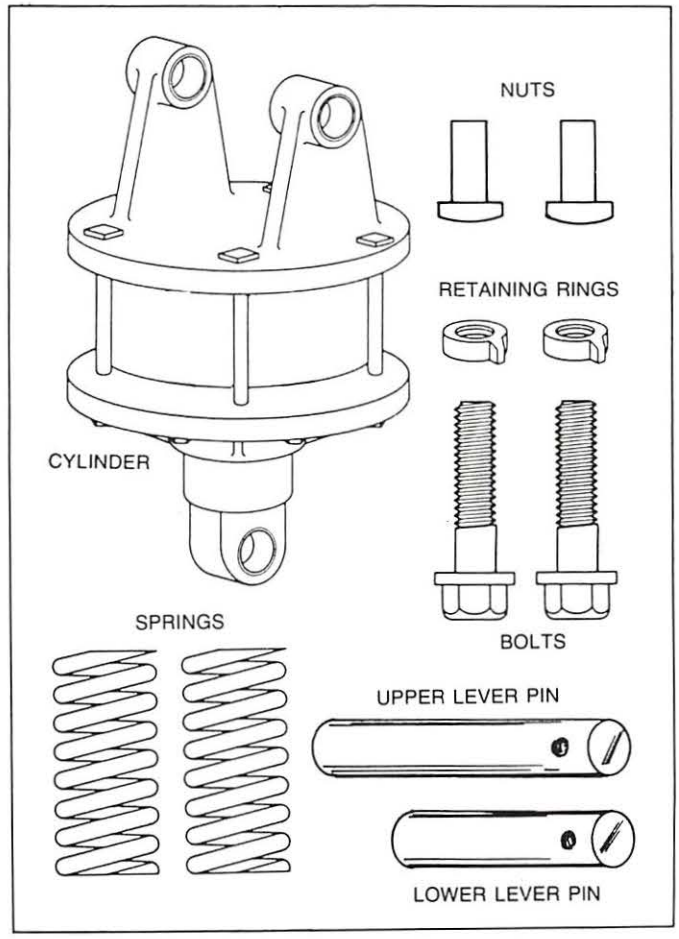

CYLINDER KIT

INSTALLATION AND MAINTENANCE

These Mini-Care Cylinders are easily installed in the field by your own maintenance personnel and may be completely field reconditioned without the need of removing the cylinders from the retarder itself. All bearings are self-lubricating, reducing costly preventative maintenance procedures. Mini-Care Cylinders can be operated with existing air pressure systems as there is no change in cylinder volume. Where small diameter cylinders are being replaced with larger ones, only minor adjustment of the Bourdon tube pressure settings is required.

FEATURES

- Self-lubricating bearings provide longer service and less maintenance.
- Tie-rod cylinder construction with replaceable fiberglass cylinder and nylon cushion rings for longer wear.
- Cast construction for longer life.
- Uses same cylinder cup packings as present cylinders.
- Cylinder replacement can be done on-site with regular maintenance personnel.
- Offers reduced preventative maintenance costs.

MINI-CARE CYLINDER REPLACEMENT KITS

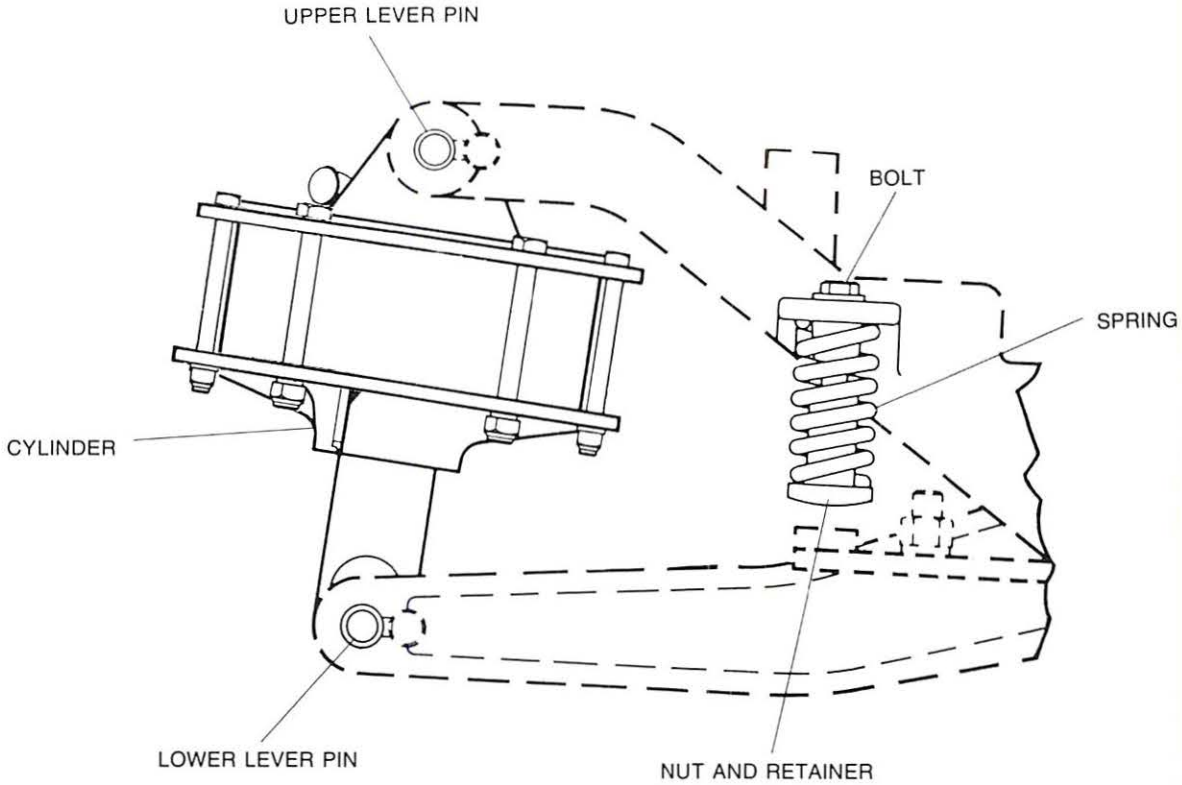

PART NO.	DESCRIPTION
X451610-2202	TYPE I MINI-CARE CYLINDER KIT, 12" cylinder, 3-3/8" stroke, upper and lower lever pins.
X451610-2302	TYPE I MINI-CARE CYLINDER KIT, 14-1/2" cylinder, 3-3/8" stroke, upper and lower lever pins.
X451610-2203	TYPE II MINI-CARE CYLINDER KIT, 12" cylinder, 3-3/8" stroke, complete with pins, springs, bolts, and retainers. For replacing existing 9-1/2" diameter cylinders having a 6" stroke.
X451610-2303	TYPE II MINI-CARE CYLINDER KIT, 14-1/2" cylinder, 3-3/8" stroke, complete with pins, springs, bolts, and retainers. For replacing existing 12" diameter cylinders having a 6" stroke.

WABCO

An American-Standard Company

TYPE IV WEIGH RAIL

The Type IV Weigh Rail is used in automatic classification yards to determine weight ranges of cars about to be processed in an automatic classification yard.

The Type IV Weigh Rail has four contacts, which are adjusted to indicate light, medium, heavy, or extra heavy cars.

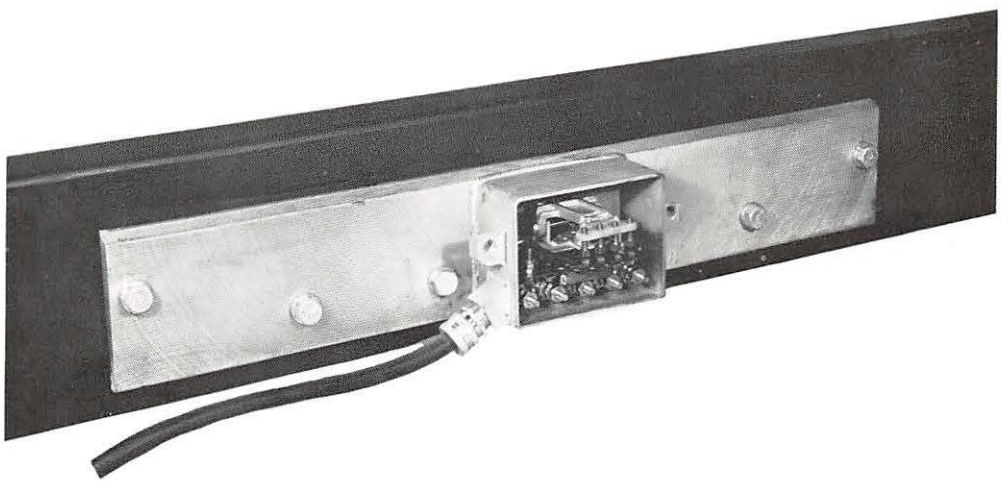

UNION SWITCH & SIGNAL DIVISION
WESTINGHOUSE AIR BRAKE COMPANY
Swissvale, PA 15218

PRINTED IN U.S.A.

RSE-14E1
10/72

WABCO

DESCRIPTION

The Type IV Weigh Rail consists of a heat treated alloy steel section, which is rectangular in cross section, and a controller box. The main section contains a lever that senses the weight exerted by a passing car. This lever is located in a horizontal slot milled in the rectangular section. The lever is attached to a side plate which is bolted directly to the rail section. Another side plate is bolted to the rail section on the opposite side to prevent entry of foreign matter and dirt into the slot.

A controller for providing weight indication is attached to the weigh rail. The controller box contains the mechanism which provides the signal to the external control circuits. This mechanism consists of a secondary lever, weight adjustment screws, electrical contacts and terminal connections.

The mechanism is capable of detecting the following weight ranges.

Light	- 14 to 35 ton
Medium	- 35 to 52 ton
Heavy	- 52 to 110 ton
Extra Heavy	- 110 ton and over

The weigh rail is designed to bolt directly to 140# R.E. rail, but can be fitted to any standard size rail sections by means of compromise joints. Recommended installation is in a straight, even graded track section at least 25 feet from any track curvature. Concrete or well tamped ballast may be used as a foundation.

OPERATION

The lever mechanism in the slotted part of the main rail is always in contact with the rail. As a car wheel passes over that portion of the rail, the rail deflects the end of the lever downward. This in turn applies pressure to a secondary lever which closes a contact, depending upon the weight of the car passing, energizing the control circuit.

FEATURES

- Meets applicable AAR requirements.
- Adaptable for use with any standard rail.
- Easily installed.
- Adjustable.

TYPE IV WEIGH RAIL

ORDERING INFORMATION

Refer to the following tabulation and order by part number and description shown in capital letters. Specify the weight of rail section in which the weigh rail is to be installed.

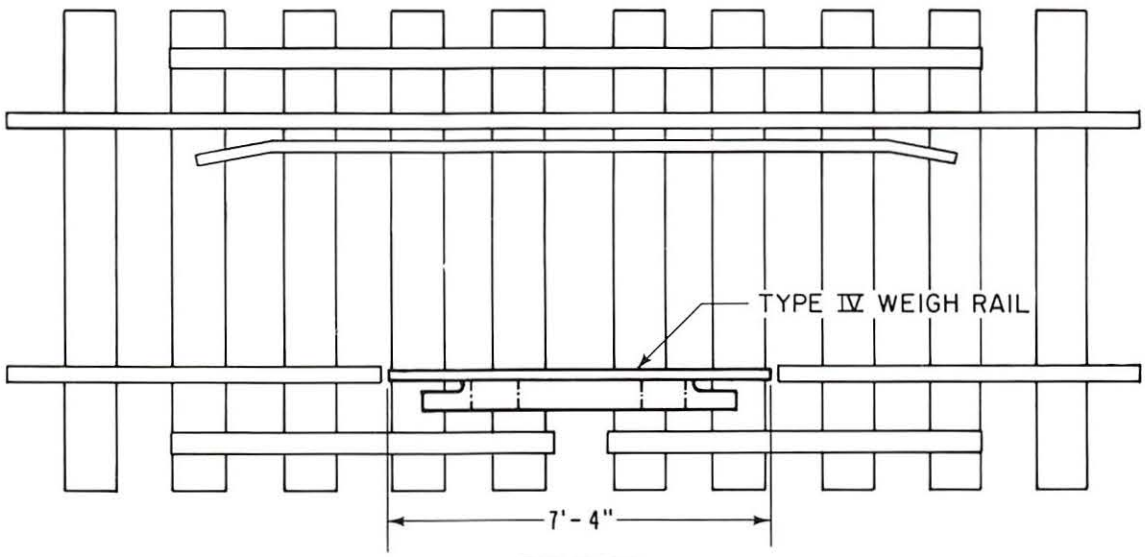

TOP VIEW

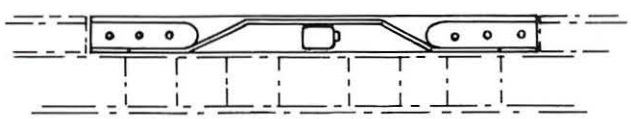

SIDE VIEW

WEIGH RAIL INSTALLED

Order by Part Number and Description Shown in Caps

PART NO.	DESCRIPTION
N451059-0201	TYPE IV WEIGH RAIL, 24V heater.
N451059-0202	TYPE IV WEIGH RAIL, 14V heater.

UNION SWITCH & SIGNAL DIVISION
WESTINGHOUSE AIR BRAKE COMPANY
Swissvale, PA 15218

DR-40 GUNN DIODE DOPPLER RADAR UNIT

The US&S DR-40 Gunn Diode Doppler Radar unit provides the latest of technological advantages in Doppler radar design for velocity measurement in classification yard retarder speed controls RT (tangent rolling resistance) measurement, and other applications requiring speed detection.

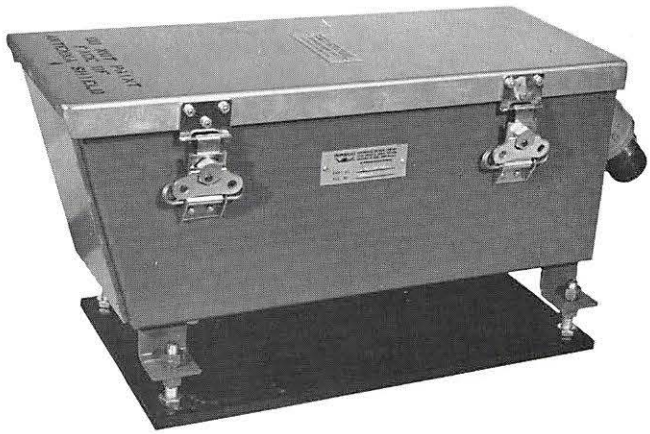

DR-40

An efficient design utilizing the solid-state Gunn diode microwave source results in reduced maintenance and installation costs over previous designs. Periodic replacement and calibration of microwave components are reduced. The inherent reduction in equipment complexity over previous designs results in a compact, self-contained unit requiring a minimum of cabling and interconnections, and designed for operation from 120 volt, 60 Hertz ac power.

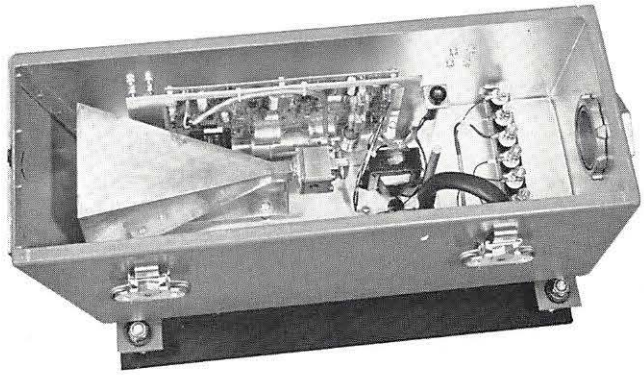

DR-40 (COVER REMOVED)

PRINTED IN U.S.A.

UNION SWITCH & SIGNAL DIVISION
AMERICAN STANDARD INC. / SWISSVALE, PA 15218

RSE-14F1
REV. 8/84

DESCRIPTION

The DR-40 Gunn Diode Doppler Radar unit consists of Gunn diode microwave source and diode detector assembly, amplifier and rf power failure circuitry, and self-contained 120 vac, 60 Hertz power supply housed in a sheet steel enclosure with attached mounting plate.

The enclosure is dustproof and waterproof, and is attached to a mounting plate by adjustable mounting brackets. An easily detachable top cover, secured with four spring-loaded links, is provided for quick access to components. The rugged enclosure is designed for mounting between or outside of the rails.

All electronic components, except the Gunn diode microwave source and diode detector assembly, are mounted on a single printed circuit board. The microwave assembly and the printed circuit board comprise a sub-chassis which is attached to the frame of the enclosure by thumbscrews. To enable quick replacement of the sub-chassis, all electrical interconnections are made through a 16-pin connector jack.

All electrical cable connections to the unit are made through an entrance ell at the rear of the enclosure to internal AAR terminals.

OPERATION

The DR-40 Gunn Diode Doppler Radar Unit is a self-contained Doppler radar transceiver unit designed for operation from a 120 vac, 60 Hertz power source.

The Gunn diode microwave source generates a 10.525 gigahertz continuous wave radar signal which is directed through a beam-forming pyramidal feedhorn antenna to the moving rail car. Due to Doppler effect, the reflected signal's frequency differs from that of the radiated signal in proportion to car speed. The reflected radar signal is received through the feedhorn antenna, mixed with the radiated signal in the diode detector assembly, and amplified to produce Doppler signal outputs (Sig. A, Sig. B), the frequency of which indicated vehicle speed. These Doppler signal outputs are routed to the central monitoring point where speed control equipment causes appropriate action to be taken, resulting in a change in car speed.

A 784.7 Hertz calibration signal, representing 25 mph velocity, is continuously routed to the radar unit from the central equipment, except during periods of time when velocity measurement is required at a particular site. The presence of the calibration signal activates switching within the radar unit which results in 784.7 Hertz Doppler signal outputs during standby conditions.

This action enables periodic calibration of speed determining equipment at the central monitoring point and also provides assurance that the Doppler signal output portion of the radar unit is functioning.

Additional circuitry within the radar unit generates a dc voltage level, termed the RFK signal, which indicates normal functioning of the radar unit. The RFK signal is routed to the central monitoring point to provide assurance that the unit is operable.

MOUNTING

The DR-40 Gunn Diode Doppler Radar unit is designed for mounting in the railroad trackway or wayside at the location at which velocity measurement is desired. Adjustable mounting brackets facilitate horizontal and vertical aiming of the radar unit. The radar unit may be ordered for mounting on a cast iron foundation pier or for mounting on a concrete foundation. Refer to Application Drawings and Ordering Information for configurations and dimensions.

Radar units ordered for mounting on a cast iron foundation pier are available, if desired, with the cast iron foundation and all

attaching hardware for both between-the-rails and adjacent-to-rails mounting.

Radar units ordered for mounting on concrete foundations are available, if desired, with a support frame and all attaching hardware for between-the-rails mounting. The support frame, of rugged steel angle construction, is designed to mount the concrete ballast foundation.

All radar units ordered for between-the-rails mounting are supplied with a protective cover designed to provide complete dragging equipment protection. The protective cover comprises a rugged steel ramp frame assembly and easily removable sheet steel top cover.

FEATURES

- Gunn diode microwave source reduced periodic microwave calibration and replacement.
- High reliability solid-state design.
- Ease of serviceability - all electronic components mounted on one easily removable sub-chassis.
- Rugged light-weight construction.
- Versatile-chassis available for direct replacement of previous radar units with minimum modifications.
- High sensitivity.
- Ease of installation - minimal cable connections required.
- Highly resistant to microphonics.
- May be ordered complete and ready for installation between, or adjacent to the rails.

CHARACTERISTICS

Operating Range, Maximum	150 feet
Frequency	10.525 ±0.21 gigahertz
Frequency Stability	+0.2% of assigned Frequency
RF Power Output	125 milliwatts max. (75 milliwatts nominal)
Power Requirements	95—125 vac, 60Hz, 12—14 watts
Doppler Signal Outputs (Sig. A, Sig. B)	14 volts peak — to — peak into a 1000 ohm load
RFK Signal Output	-4 vdc nominal into a 1000 ohm load
Calibration Signal Input	784.7 Hertz, 6 volts peak-to-peak into 50,000 ohms
Temperature Range	-40° C to 70° C (-40° F to 160° F)
Weight	44 pounds complete (11 pounds — retrofit chassis)
Horizontal Aiming Adjustment	
Ballast Foundation Mounted	±6°
Concrete Foundation Mounted	±1°
Vertical Aiming Adjustment	±1.5°

UNION SWITCH & SIGNAL

DR-40 GUNN DIODE DOPPLER UNIT

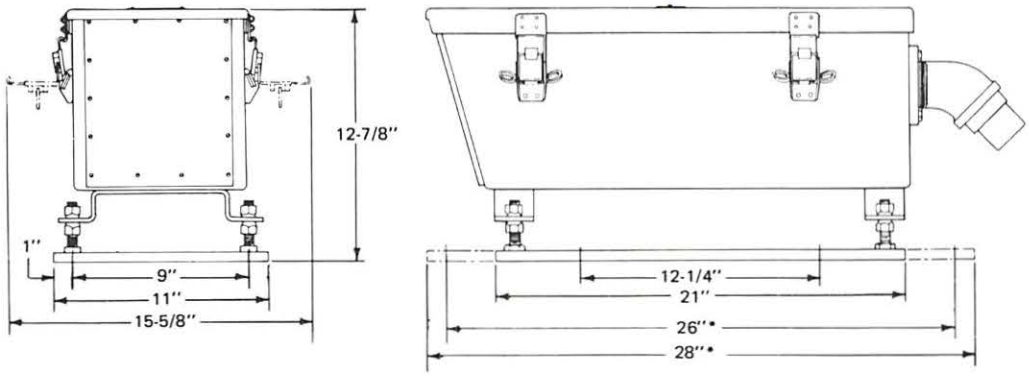

* FOR CONCRETE FOUNDATION MOUNTING ONLY

PART NO.	DESCRIPTION
N451127-0201	DR-40 RADAR UNIT with mounting plate designed for mounting on a cast iron foundation pier.
N451127-0202	DR-40 RADAR UNIT with mounting plate designed for mounting on a concrete foundation.

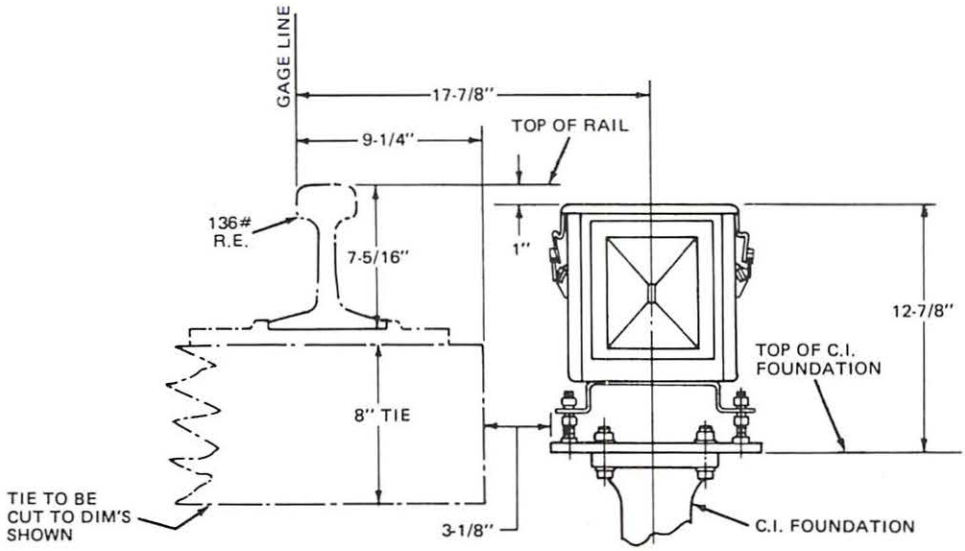

PART NO.	DESCRIPTION
X451474-0601	DR-40 RADAR UNIT COMPLETE with cast iron pier and attaching hardware for mounting outside the rails.

DR-40 GUNN DIODE DOPPLER UNIT

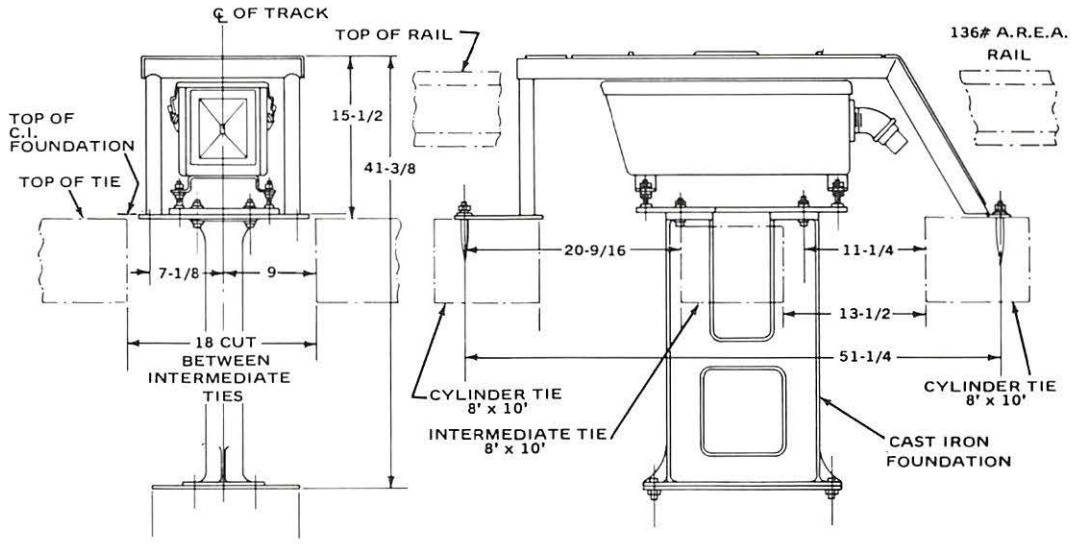

PART NO.	DESCRIPTION
X451474-0701	DR-40 RADAR UNIT COMPLETE with cast iron foundation pier, protective housing, and attaching hardware for mounting between the rails.

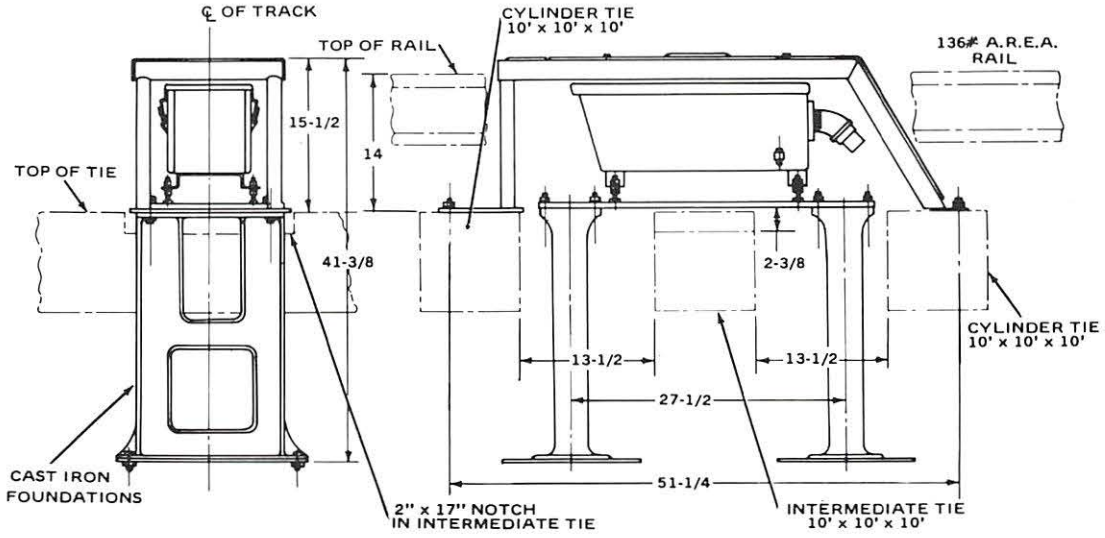

NOTE: ALL DIMENSIONS ARE IN INCHES.

PART NO.	DESCRIPTION
X451474-0901	DR-40 RADAR UNIT COMPLETE with two cast iron foundation piers, protective housing, and attaching hardware for mounting between the rails.

DR-40 GUNN DIODE DOPPLER UNIT

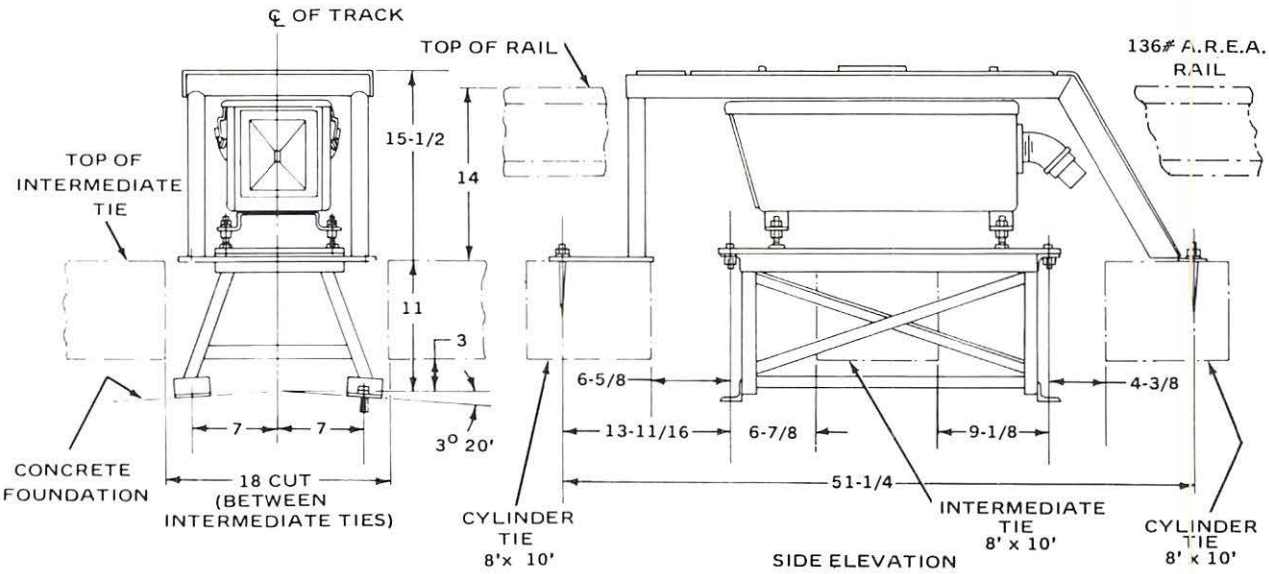

NOTE: ALL DIMENSIONS ARE IN INCHES.

PART NO.	DESCRIPTION
X451474-0801	DR-40 RADAR UNIT COMPLETE with support frame, protective housing, and attaching hardware for concrete foundation mounting between the rails.

DR-40 GUNN DIODE DOPPLER UNIT RETROFIT CHASSIS

PART NO.	DESCRIPTION
N451128-0802	DR-40 RADAR UNIT RETROFIT CHASSIS for retrofit of DR-30 or DR-20 radar units. Includes all screws, washers, and wire tags required.

OPTIONAL EQUIPMENT

CAST IRON FOUNDATION PIER AND ATTACHING HARDWARE

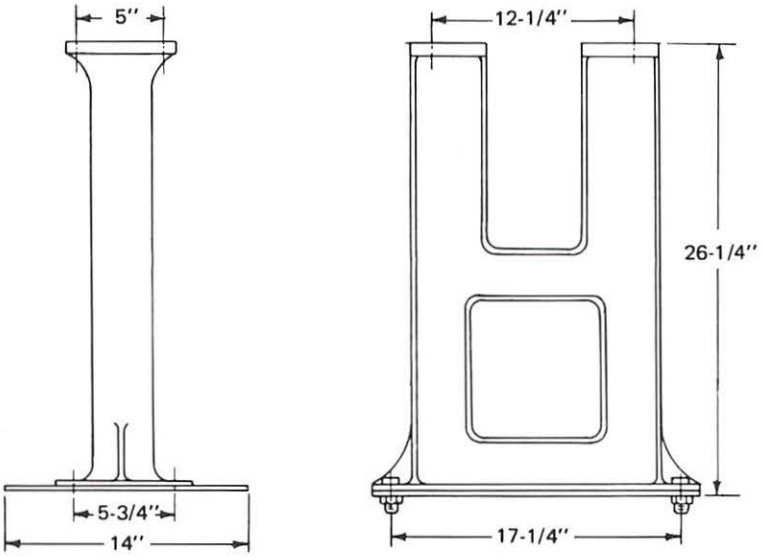

PART NO.	DESCRIPTION	QTY.
N306403	FOUNDATION, Cast Iron	1
J050162	SCREW, 1/2"x21/4" Hex Head Steel Cap	4
J047769	WASHER, 1/2" Lock	4
J047503	WASHER, 1/2" Flat	4
J048013	NUT, 1/2" Hex	4

TRAIN CONTROL

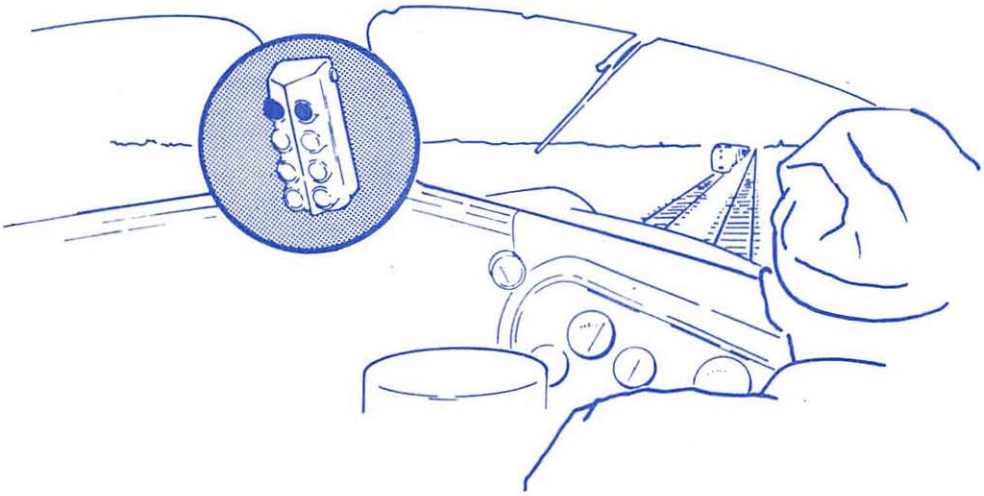

RSE-15

TRAIN CONTROL

VEHICLE TRAIN CONTROL SYSTEM

El Cab Signal System RSE-15A1
El Cab Signal Equipment Box RSE-15A2
El Cab Signal Equipment Box with Overspeed RSE-15A3
Cab Aspect Indicators RSE-15A4
F-42 DC/DC Converter RSE-15A5
Locomotive Pick-Up Coils RSE-15A6
Speedometers RSE-15A7
Axle Generator RSE-15A8

TRAIN STOPS

EM-1 Automatic Train Stop RSE-15B1

TEST EQUIPMENT

6-Code Test Set RSE-15D1

CAB SIGNAL RELAYS

Vital Plug-In DC Cab Signal Relays PN-59 ..... RSE-15E1
Vital Plug-In DC Cab Signal Relay PN-159B RSE-15E2
Vital Plug-In DC Cab Signal Relay PL-59 ..... RSE-15E3

EL CAB SIGNAL SYSTEM

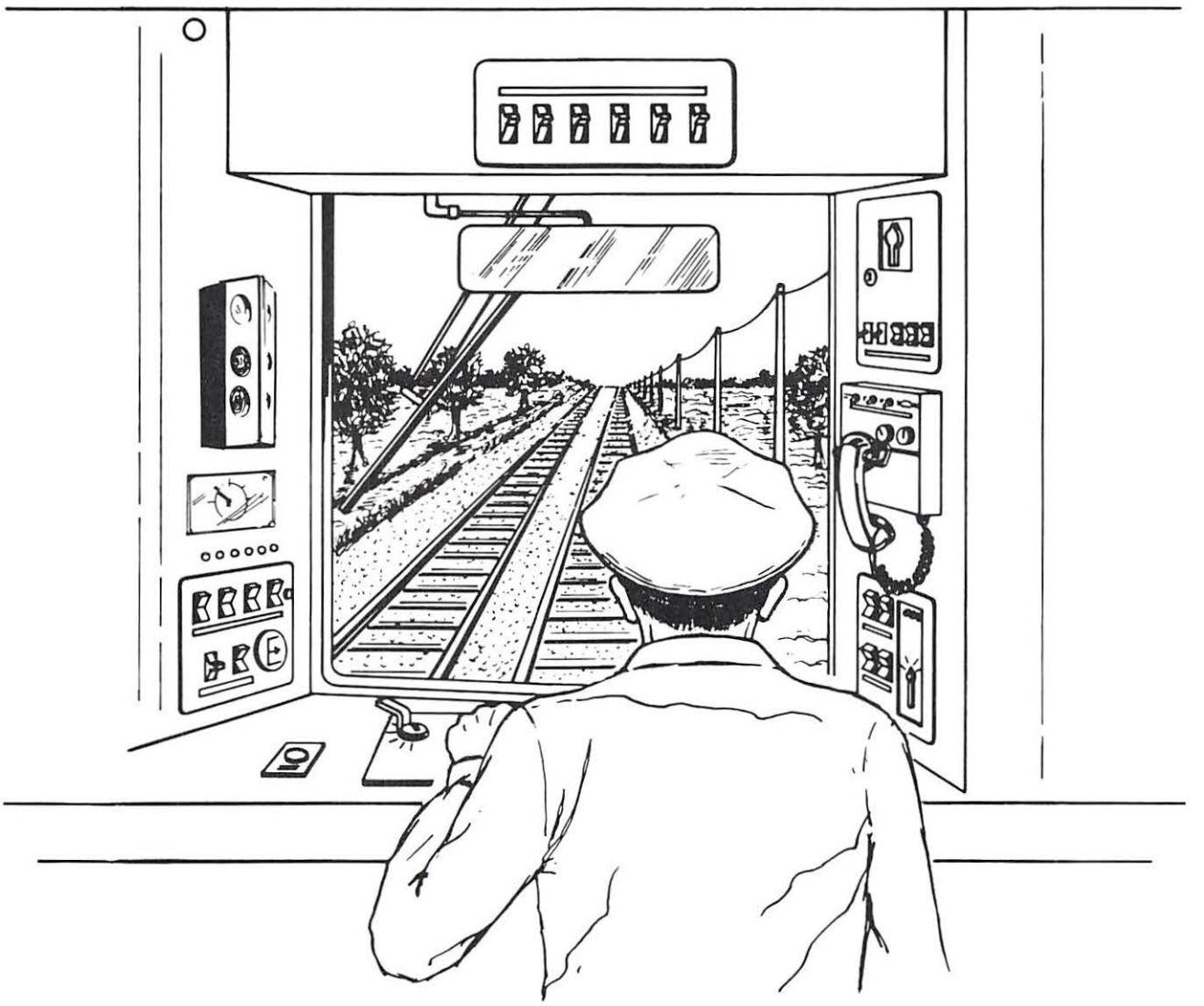

PRINTED IN U.S.A.

UNION SWITCH & SIGNAL DIVISION
AMERICAN STANDARD INC. / SWISSVALE, PA 15218

RSE-15A1
4/76

INTRODUCTION

To satisfy the need for high reliability and safety necessary to the operation of modern high speed, short headway rail systems, US&S offers the EL Cab Signal System.

US&S's Cab Signal Systems have been in service since the late 1920's. Updated to incorporate the latest technological techniques, and the use of solid state components, coupled with continuous empirical testing, US&S's EL Cab Signal Systems now offer the user the utmost in reliability. Mean time-between-failure calculations and experience on equipment in service on both transit and railroad properties indicate an expected MTBF of greater than 25,000 hours.

The EL Cab Signal System provides a continuously visible aspect signal in the vehicle cab which, in conjunction with an audible warning signal, instantly notifies the operator of any change in conditions ahead. Regardless of wayside obstructions or prevailing weather conditions the continuous cab signal indication always gives advance block occupancy information in plain sight of the operator.

The system provides the planner with complete flexibility in meeting individual requirements. Safety is assured by "fail-safe" design using vital relays along with other highly reliable components designed for rail service. Each piece of equipment in the system is ruggedly constructed to minimize maintenance, increase reliability, and reduce installation time.

CAB SIGNAL OPERATION

The EL Cab Signal System is available in two basic configurations; the standard cab signaling system and the cab signaling system with integral overspeed speed control system. Each configuration is available with up to seven aspect indications.

Depending upon the application and the type of wayside signaling employed, wayside signal configurations and speed limits vary. The following discussion concerns basic EL Cab Signal System operation of a typical four indication system; however, operation of systems employing different indications are analogous.

As one train enters the first of four blocks, the fourth of which is occupied, the cab signal and wayside signal display a green or "clear" signal. As the next wayside signal displaying flashing yellow or "approach-medium" is passed, the cab signal changes to "approach-medium" or yellow over green. The restrictive condition is called to the operators attention by the sounding of the warning signal which continues to sound until the operator acknowledges the condition by operating the conveniently located acknowledging switch. When the next wayside signal displaying steady yellow or "approach" is passed, the cab signal changes to "approach" or yellow and, as before, the warning signal sounds continually until silenced by operation of the acknowledging switch. The next wayside signal displays red or "stop and proceed" as the block it governs is occupied. As this wayside signal is passed, the cab signal changes to "restricting" or red over yellow and the warning signal sounds until the new condition is acknowledged.

In addition to standard cab signaling, the EL Cab Signal System may, if desired, incorporate an integral speed control system designed to limit maximum speed depending on track status and to enforce a penalty brake application if appropriate corrective action is not taken.

When the cab signal aspect changes to a more restrictive aspect the warning signal sounds and an overspeed indication lamp flashes until the operator acknowledges the change and makes a brake suppression. If the operator fails to acknowledge within a specified period of time, a brake application results. Once this penalty brake application has started, a full stop must be made before a brake release can be made.

FUNCTIONAL DESCRIPTION

The basic EL Cab Signal System is divided into two basic equipment groups; the wayside coding equipment which provides the proper coded signal, and the vehicle carried equipment which provides the corresponding aspect indication and, with an integral speed control system, provides control of the vehicle braking system for certain conditions.

The wayside coding equipment generates a carrier frequency coded at a rate corresponding to a particular cab aspect as dictated by conditions in advance of the train. Code rate frequencies of 0, 50, 75, 120, 180, 270, or 420 cycles per minute are utilized as required to accommodate up to seven aspects.

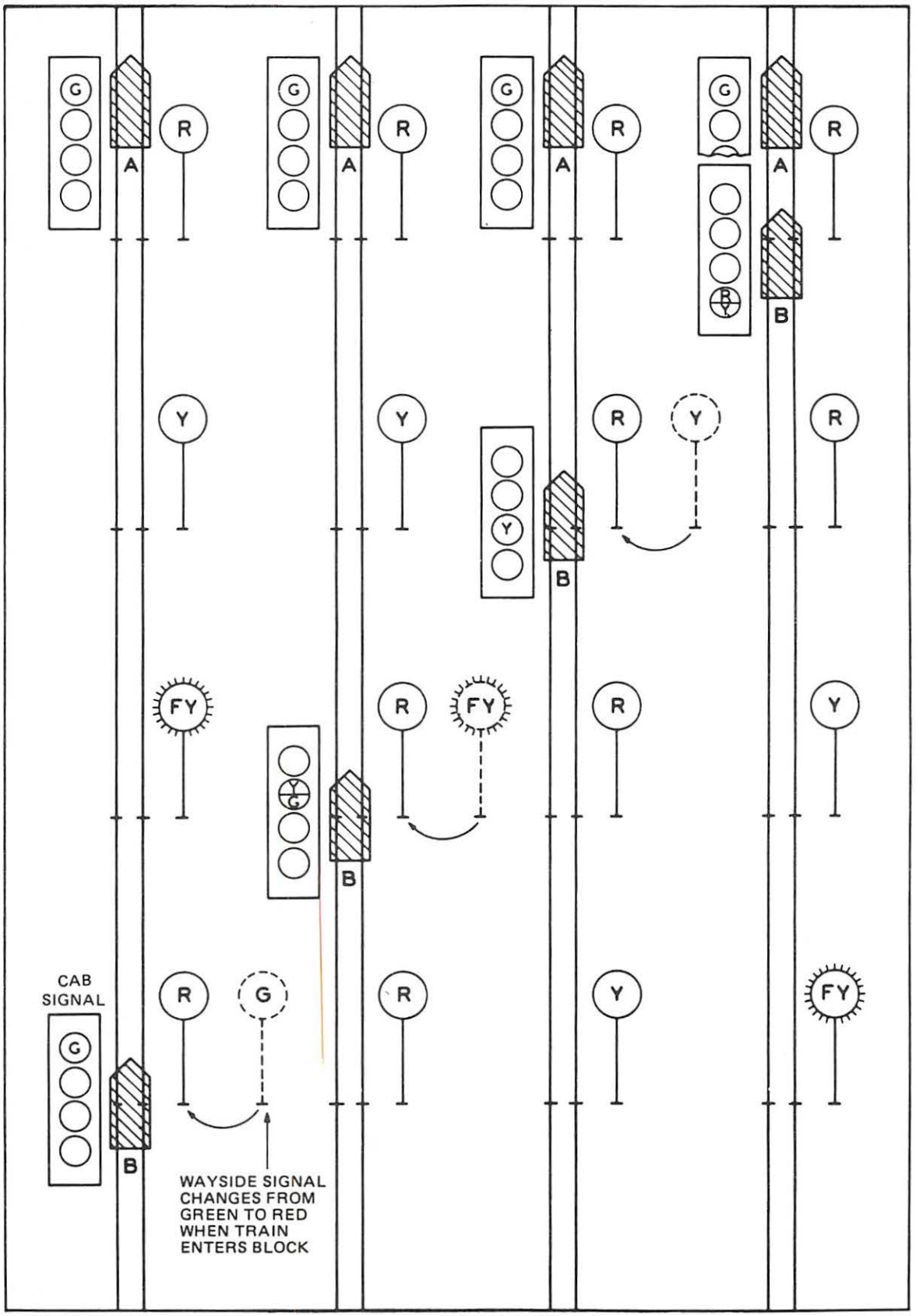

CAB INDICATIONS FOR A TYPICAL FOUR INDICATION SYSTEM

The vehicle equipment comprises the locomotive Pick-Up Coil, EL Cab Signal Equipment Box, Cab Aspect Indicator, warning whistle, acknowledge switch, converter power source, and in systems employing an integral speed control system, the Axle Generator and Speedometer.

The coded carrier signal is then inductively coupled to the vehicle Pick-Up Coils located ahead of the front wheels. The EL Cab Signal Equipment Box circuitry then amplifies and decodes the coded carrier to provide a visual cab signal indicator display corresponding to the particular code rate. When the carrier code rate changes, the EL Cab Signal Equipment Box circuitry detects the change and energizes the warning whistle which continues to sound until silenced by operation of the acknowledge switch mounted in the vehicle cab.

The Axle Generator, driven through a locomotive axle, provides a speed indication signal which is routed to the EL Cab Signal Equipment Box to provide visual speed indication and to control the vehicle brake system. The cab-mounted Speedometer provides a visual indication of vehicle speed corresponding to the speed indication signal from the Axle Generator. The Axle Generator output is compared to a voltage corresponding to the maximum allowable speed for the particular code rate. If vehicle speed exceeds the allowable, the EL Cab Signal Equipment Box circuitry, after a specific time delay to allow operator response, energizes the braking valve which initiates a full service brake application.

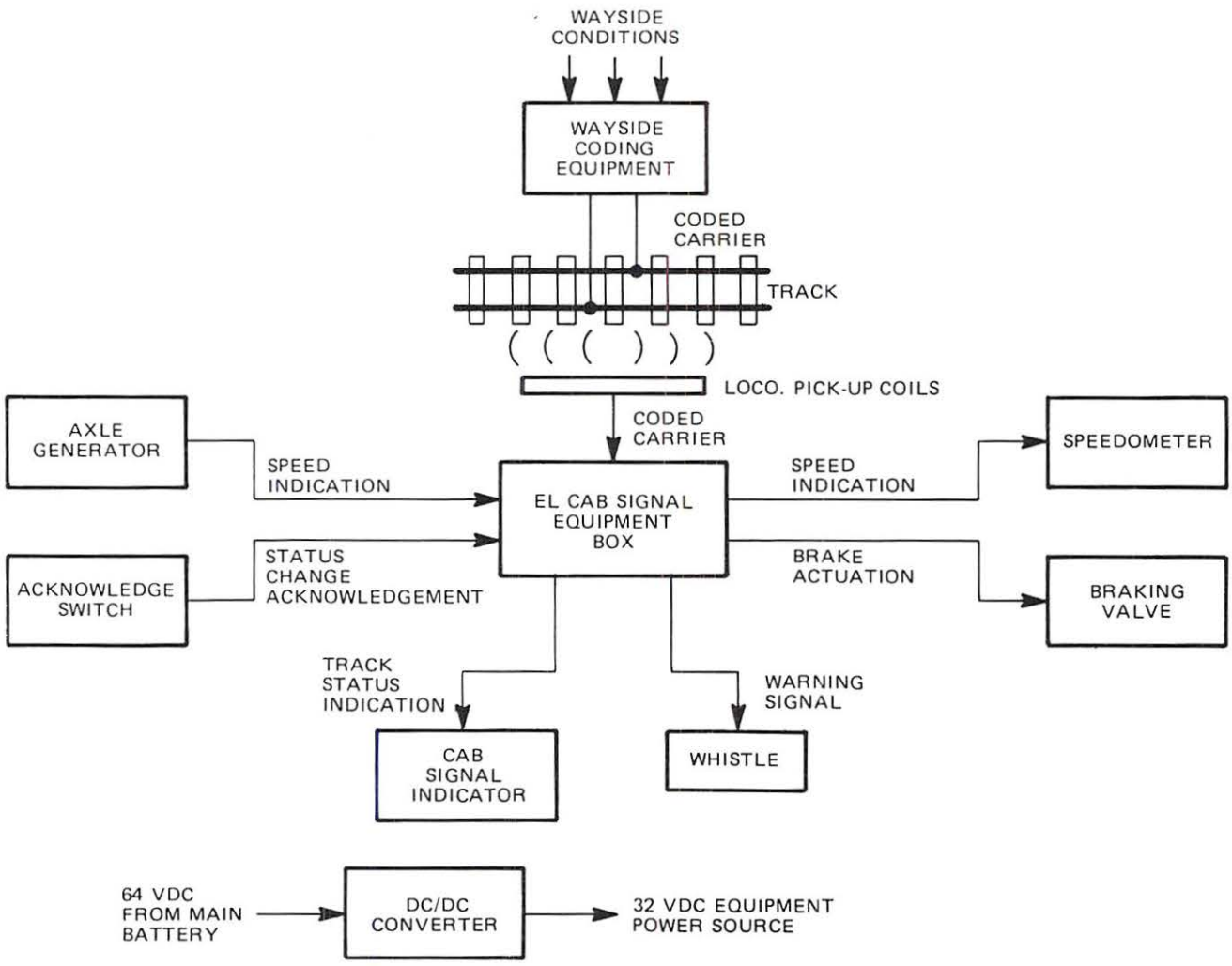

BASIC EL CAB SYSTEM WITH OVERSPEED CONTROL

SYSTEM EQUIPMENT DESCRIPTION

Depending on system requirements, equipment configurations and design vary. The basic EL Cab Signal System equipment comprises the EL Cab Signal Equipment Box, Cab Indicator, Pick-Up Coils, F-42 DC/DC Converter, and associated interconnecting cables. The EL Cab Signal System equipment with an integral overspeed system comprises the basic system equipment previously mentioned in addition to the Speedometer, Axle Generator, and interconnecting cables. Detailed descriptions and specifications for each piece of equipment are provided in subsequent catalog sections, therefore no attempt will be made to cover this data in this catalog section. Refer to the tabulation provided in the Ordering Information which provides reference to specific catalog sections for individual equipment.

EL Cab Signal Equipment Box

The EL Cab Signal Equipment Box is a completely self-contained assembly designed for operation from a 32-volt dc power source and is housed in a dust-free, water-tight enclosure. The unit is available in two configurations, one designed for cab signal control and one designed for cab signal and speed control. All components of the equipment are mounted on a shelf, resiliently supported inside the equipment box to reduce vibration and shock to a minimum. Power fuses and main power switch are conveniently mounted in the equipment box for easy access. Terminals are conveniently located within the enclosure for ease of installation. Standard vital plug-in relays and solid state amplifier modules are utilized for high reliability and ease of maintenance.

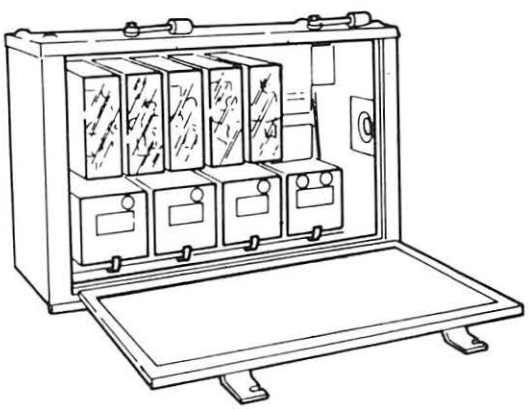

TYPICAL EL CAB SIGNAL EQUIPMENT BOX

Cab Indicator

The Cab Indicator is a completely self-contained aspect display unit with integral mounting bracket designed for surface mounting. The unit is available with aspect configurations to suit individual requirements. The Cab Indicator is designed for operation from a 32-volt dc power source and is available with or without hoods.

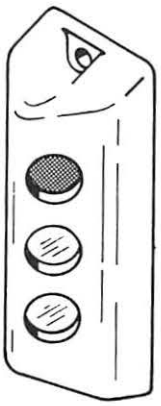

TYPICAL CAB INDICATOR

Pick-Up Coils

The Pick-Up Coil is ruggedly constructed of laminated iron bars, on which is mounted a coil molded in rubber and equipped with a polarized, water-tight plug connector. The unit is designed for mounting on the vehicle ahead of the front truck near the level of the front rails.

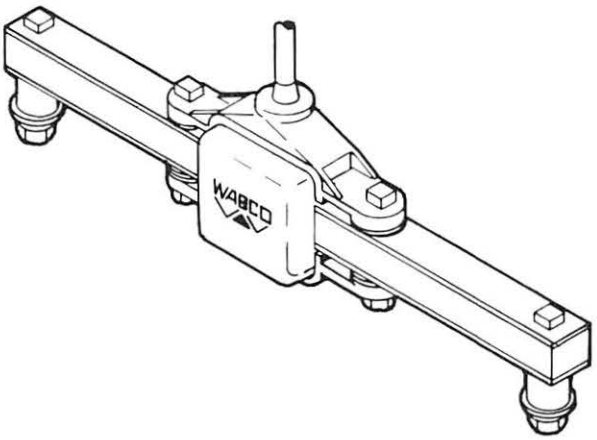

TYPICAL PICK-UP COIL

F-42 DC/DC Converter

The F-42 DC/DC Converter is a completely solid state power converter designed to provide 32 volts dc for system operation. The unit is housed in a space saving, weatherproof enclosure and is designd to operate from input voltages of 60 to 80 volts dc. While meeting many system requirements, the F-42 converter has been specifically designed to meet the requirements of US&S's Cab Signal and Overspeed Systems.

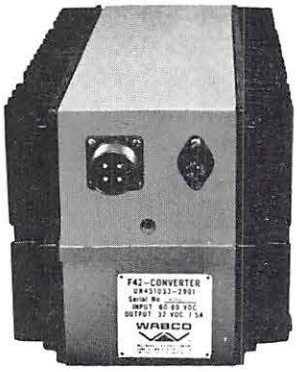

F-42 DC/DC CONVERTER

Speedometer

The Speedometer is a compact, space saving unit designed for panel mounting in the vehicle cab. The Speedometer consists of an indicator meter, printed circuit board and lighted bezel with a dimmer control. Individual indicator lights placed concentrically around the speedometer indicate the maximum allowable speed as determined by the cab signal system.

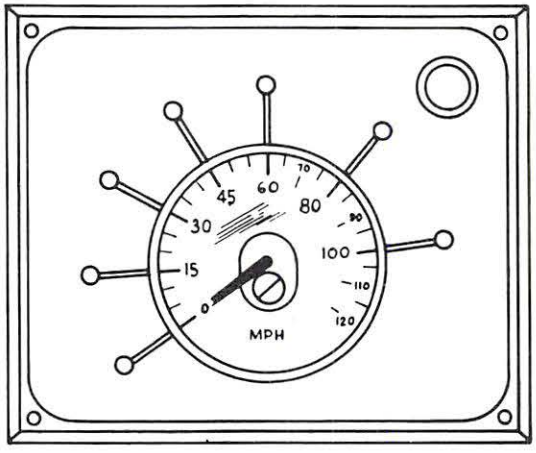

TYPICAL SPEEDOMETER PANEL

Axle Generator

The Axle Generator is a rugged impulse generator designed for mounting on a locomotive journal box. The outlet fitting is designed for installing rubber tubing to provide a waterproof abrasion-resistant connection.

Because of the particular design of the Axle Generator and overspeed system, only one Axle Generator per vehicle is required, while maintaining system vitality.

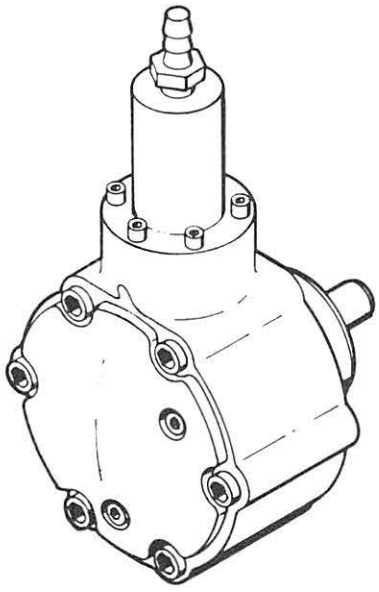

AXLE GENERATOR

APPLICATION

The EL Cab Signal System, in addition to providing cab signal and overspeed control function, may also be utilized in providing automatic train stop or ATO functions.

Automatic Train Stop

In the automatic train stop system, the equipment not only sounds the whistle, but also initiates an automatic brake application. The automatic application may be forestalled if, within a specified period of time, the operator operates the acknowledging switch or takes other means provided to show that he is alert to the warning and prepared to control the train properly. Failure of the operator to take proper action will result in an automatic application of the brakes to stop the train.

Speed Control

In speed control, the equipment enforces speed limits in accordance with the cab signal aspects. There is a maximum speed established for each cab signal aspect, and if that speed is exceeded, an automatic application of the brakes will take place unless action is promptly taken by the operator to control the train. When the permissible speed is exceeded, the whistle will sound and the operator may still retain control of the brakes if he acts within the specified period of time to make a brake application. Failure of the operator to take proper action will result in an automatic application of the brakes.

ORDERING INFORMATION

Consult your nearest Union Switch & Signal Division representative for additional details and system planning information. For description and details of equipment required for a typical system, refer to the following catalog sections.

Equipment	Catalog Section
EL Cab Signal Equipment Box	15A2
EL Cab Signal Equipment Box with Integral Speed Control	15A3
Cab Aspect Indicators	15A4
F-42 DC/DC Converter	15A5
Pick-Up Coils	15A6
Speedometers	15A7
Axle Generator	15A8

NOTE: For installation, maintenance and additional information, refer to service manual SM5680.

EL CAB SIGNAL EQUIPMENT BOX

The EL Cab Signal Equipment Box, developed by US&S for their EL Cab Signal System, meets the need for smaller, lighter, and more economical vehicle equipment for decoding use in coded cab signal territory. The unit is completely self-contained and designed for operation from a 32-volt dc power source.

In conjunction with a cab aspect indicator and associated equipment, the unit provides continuously visible aspect signals in the vehicle cab and, when changing to a more restrictive condition, sounds an audible signal.

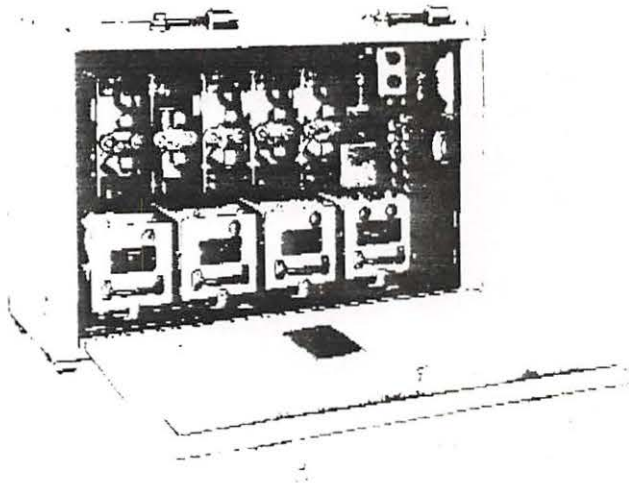

DESCRIPTION

The EL Cab Signal Equipment Box consists of an electrical control assembly housed in a dust-free, water-tight sheet steel enclosure with hinged front cover. The electrical control assembly is mounted on a shelf, L-shaped in cross section, which is resiliently supported inside the housing. Standard terminals are provided at the front of the shelf to facilitate connections. Shelf wiring connections are made to the rear of the terminals leaving the front free for connecting external wiring. A convenient cable outlet on the side of the housing is provided for routing of connecting cables.

The electrical control assembly consists of the plug-in decoding relays, master relay, solid state amplifier modules, and associated components all mounted on the equipment shelf. Main power fuses and power switches are conveniently mounted for easy access.

Standard vital plug-in relays and solid state module construction insure high reliability and ease of maintenance, while fail-safe design provides protection against false aspect indications.

FEATURES

- Rugged water-tight enclosure.
- Components resiliently mounted for long term reliable operation.
- Available for up to seven aspects.
- Solid state design utilizing vital relays — high reliability.
- Fail safe design.

FUNCTIONAL OPERATION

The following paragraph concerns operation of a typical three-aspect system; however, operation of units designed for more aspects is analogous.

Coded signals, inductively picked up from the running rails by pick-up coils, are routed to a solid state amplifier for amplification and impedance matching to drive a master relay. The master relay is a dc polarized-stick relay, whose armature is held in whichever position it occupied while last energized. With alternating current of the code frequency impressed on its coil, the relay is energized periodically in opposite directions, therefore, the relay contacts alternately close and open at the code frequency. The master relay contact output is routed in parallel to each decoder unit. One decoder unti is provided for each aspect. The untuned decoder unit, corresponds to the most restrictive "approach" aspect. As this circuit is usually not tuned, its output is active for all three of the code frequencies. The tuned decoder unit outputs are active only for the code frequency to which they are tuned. The decoder unit outputs are routed to the decoding and acknowledging logic relays where decoding relays corresponding to the individual aspects are energized. The contacts of the decoding relays are used in conjunction with the 32 volts dc power source to supply power to the proper lamp in the cab aspect indicator. When a decoding relay corresponding to a more restrictive condition is energized, an associated acknowledging relay activates the whistle magnet valve to sound an audible warning signal. The acknowledging relay circuit is such that the whistle magnet valve output is continually activated until such time as the acknowledge switch is operated. The acknowledge switch is normally located for easy access to the operator.

APPLICATION

The EL Cab Signal Equipment Box is designed for application in coded cab signal territory employing up to seven coded aspects. When utilized as a portion of US&S's EL Cab Signal System the equipment is designed to provide safe, efficient operation of rail systems where optimum safety and reliable scheduling is desired.

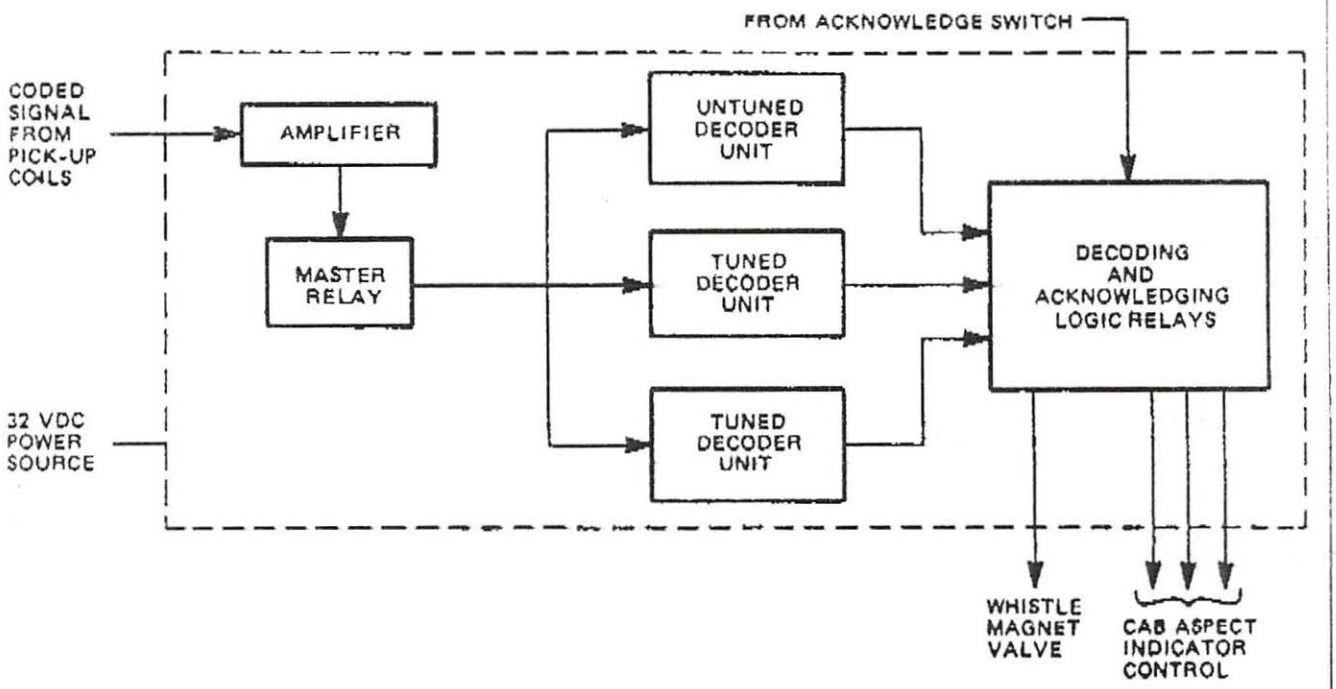

TYPICAL THREE-ASPECT SYSTEM

MOUNTING

Convenient mounting feet with integral rubber shock mounts for vibration damping are attached to the bottom four corners of the equipment to facilitate convenient shelf mounting. In addition, predrilled mounting holes are provided on the top corners of the enclosure to enable mounting to a frame for added rigidity.

OPTIONAL EQUIPMENT

The following optional equipment may be ordered to complete the installation. Refer to catalog section RSE-15A1 for information and details on the complete EL Cab Signal System.

- Acknowledge Switch
- Cab Aspect Indicator
- Overspeed System
- Pneumatic System Interface
- Inverter Power Supply

Whistle Magnet Valve

The whistle magnet valve is an electromagnetic pressure solenoid valve which energizes the vehicle whistle to provide an audible warning to the operator to insure that corrective action is taken.

SPECIFICATIONS

Input Power ..... 32 volts dc, 2 amps

Carrier
Frequency ..... 60 or 100 Hz

Code
Frequency ..... 50, 75, 120, 180, 270, 420 Hz

Up to seven aspects

For system applications and additional information, consult your nearest US&S representative.

EL CAB SIGNAL EQUIPMENT BOX

ORDERING INFORMATION

Typical EL Cab Signal Equipment Box. Actual size and configuration is dependent on the number of aspects and functions required.

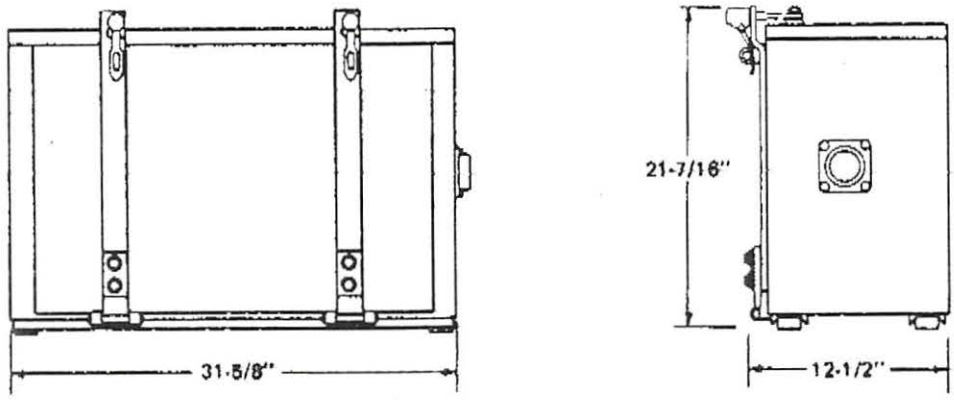

NOTE: Dimensions shown are for a representative Equipment Box and will vary with specific application.

EL CAB SIGNAL EQUIPMENT BOX WITH OVERSPEED

The EL Cab Signal Equipment Box with Overspeed, developed by US&S for their EL Cab Signal System, meets the need for a reliable, economical cab signal equipment with an integral overspeed control designed for use in coded cab signal territory.

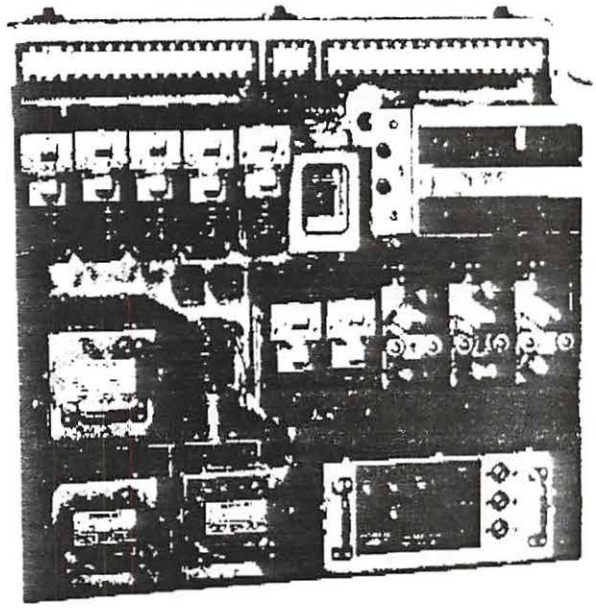

TYPICAL COMPONENT VIEW

In conjunction with a cab aspect indicator and associated equipment, the unit provides automatic control of vehicle braking in the event the operator fails to take the proper corrective action dictated by the cab signal overspeed system. Additionally the unit provides continuously visible aspect signals and an audible warning when changing to a more restrictive condition.

The unit is completely self-contained and designed for operation from a 32-volt dc power source. Fail-safe design utilizing standard vital plug-in relays and solid state module construction, ensures the utmost in safety and reliability.

FEATURES

- Fail-safe design.
- Wheel diameter switch — provides correction for wheel diameter reduction due to wear or grinding.
- Rugged water-tight enclosure.
- Versatile — equipment may be provided for up to seven aspects.
- High reliability — solid state design utilizing vital relays.

UNION SWITCH & SIGNAL INC.

RSE-15A3

4/76

DESCRIPTION

The EL Cab Signal Equipment Box with Overspeed consists of an electrical control assembly housed in a dust-free, water-tight enclosure with hinged front cover. The electrical control assembly is mounted on a shelf, L-shaped in cross section, which is resiliently supported inside the housing.

Standard terminals are provided at the front of the shelf to facilitate connection. Shelf wiring connections are made to the rear of the terminals, allowing easy connection of external wiring to the front. A convenient cable outlet on the side of the housing is provided for routing of connecting cables.

The electrical control assembly consists of the plug-in decoding relays, master relay, solid state amplifier modules and associated components all mounted on the equipment shelf. Main power fuses, power switch, and wheel diameter switch are conveniently mounted on the equipment box shelf for easy access.

FUNCTIONAL OPERATION

The following paragraph concerns operation of a typical three-aspect overspeed system; however, operation of units designed for more aspects is analogous.

Coded signals, inductively picked up from the running rails by the vehicle pick-up coils, are

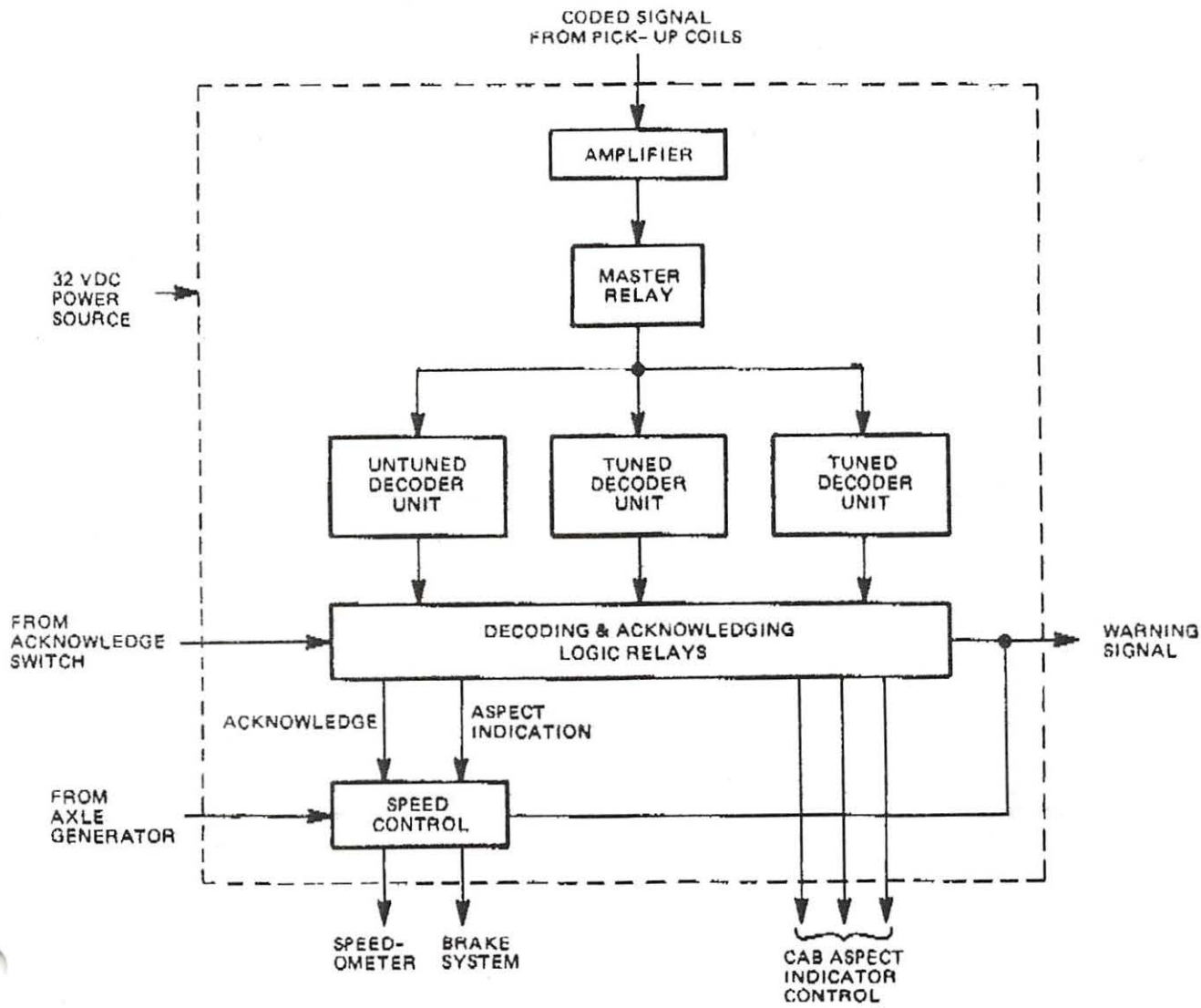

TYPICAL THREE-ASPECT OVERSPEED SYSTEM

routed to a solid state amplifier for amplification and impedance matching to drive a master relay. The master relay is a dc polarized-stick relay, whose armature is held in whichever position it occupied while last energized. With alternating current of the code frequency impressed on its coil, the relay is energized periodically in opposite directions, therefore, the relay contacts alternately close and open at the code frequency. The master relay contact output is routed in parallel to each decoder unit. One decoder unit is provided for each aspect. The untuned decoder unit corresponds to the most restrictive "approach" aspect. As this circuit is usually not tuned, its output is active for all three of the code frequencies. The tuned decoder unit outputs are active only for the code frequency to which they are tuned. The decoder unit outputs are routed to the decoding and acknowledging logic relays where decoding relays corresponding to the individual aspects are energized. The contacts of the decoding relays are used in conjunction with the 32-volt dc power source to supply power to the proper lamp in the cab aspect indicator. When the decoding relay corresponding to a more restrictive condition is energized, an associated acknowledging relay activates the warning signal to sound an audible warning signal. The acknowledging relay circuit is such that the output is continually activated until such time as the acknowledge switch is operated. The acknowledge switch is normally located in the operating cab to ensure that the operator is aware of changes to a more restrictive condition. An ac signal from an axle generator, the frequency of which is dependent on vehicle speed, is routed to the speed control system where, dependent on the aspect indication, a definite speed limit is imposed. If the speed of the vehicle is greater than the speed limit imposed for the particular aspect, the warning signal is activated and the operator must acknowledge by activating the acknowledge switch and by reducing vehicle speed; if not, an automatic penalty brake application is made. Additionally, a speedometer drive signal dependent on the frequency of the ac signal from the axle generator is provided to drive a cab-mounted speedometer.

APPLICATION

The EL Cab Signal Equipment Box with Overspeed is designed for application in cab signal territory for up to seven aspects where added protection from overspeed condition is desired to ensure safe operation.

MOUNTING

Convenient mounting feet with integral shock mounts for vibration damping are attached to all four corners of the equipment to facilitate convenient shelf mounting. In addition, predrilled mounting holes are provided on the top corners of the enclosure to enable mounting to a frame for added rigidity.

OPTIONAL EQUIPMENT

The following optional equipment may be desired or required to complete the installation. Refer to catalog section RSE-15A1 for information and details on the complete EL Cab Signal System.

Acknowledge Switch
Cab Aspect Indicator
Pneumatic System Interface
Inverter Power Supply

SPECIFICATIONS

Input Power . . . . . 32 volts dc, 2-1/2 amps
Carrier
  Frequency. . . . . 60, 100 Hz
Code
  Frequency. . . . 50, 75, 120, 180, 270, 420 Hz

UNION SWITCH & SIGNAL

EL CAB SIGNAL EQUIPMENT BOX WITH OVERSPEED

ORDERING INFORMATION

Typical EL Cab Signal Equipment Box with Overspeed. Actual size and configuration is dependent on the number of aspects and functions required.

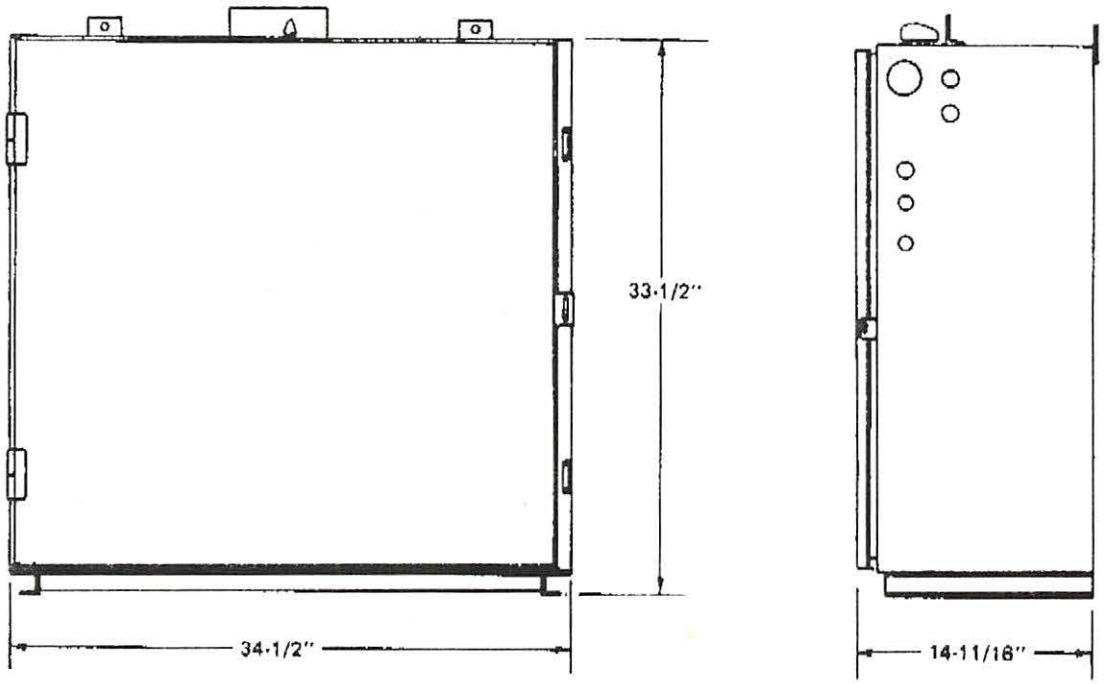

NOTE: Dimensions shown are for a representative Equipment Box with Overspeed and will vary with specific application.

For system applications and additional information, consult your nearest US&S representative.

WABCO

An **American-Standard** Company

CAB ASPECT INDICATORS

WABCO's Cab Aspect Indicators are highly reliable, ruggedly built signal units designed to display aspect indications. Vertical arrays of indicators provide easy viewing from any angle. Highest quality in both design and manufacturing result in a signal unit that will provide many years of trouble-free service.

- Rugged construction.
- Easily maintained — quick access to interior of case for maintenance or lamp changing.
- Large selection of aspect/color combinations available.
- Available with hoods for added definition.
- High visibility — diagonally mounted indicator arrays.

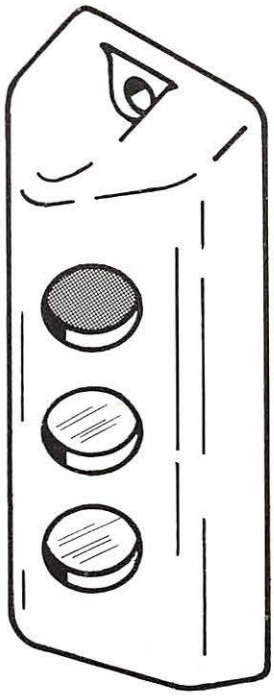

UNION SWITCH & SIGNAL DIVISION
WESTINGHOUSE AIR BRAKE COMPANY
Swissvale, PA 15218

PRINTED IN U.S.A.

RSE-15A4
4/76

WABCO

DESCRIPTION

The Cab Aspect Indicator consists of a steel enclosure with removable front cover and integral mounting bracket, in which is mounted a vertical array of indicator lamps and sockets, and terminal board. The Cab Aspect Indicator is available in two types; cast iron with screw base bulbs, and sheet steel with bayonet base bulbs.

The cast iron type features a removable cast iron front cover, attached to the rear portion of the enclosure by easily removable clamps, and incorporates two diagonally-mounted vertical arrays of indication lenses. Vertical indicator lamps with screw base socket and AAR terminals are rigidly attached to the rear of the unit. Standard 15 watt screw base bulbs are available for operation from 32 volt or 34 volt power sources. Pre-drilled and tapped outlets provide for easy routing of cables.

The sheet steel type features a removable front cover, attached to the rear portion of the unit by two captive mounting screws, and incorporates diagonally or flat mounted vertical arrays of indication lenses. The vertical arrays of indicator lamps, sockets, and barrier terminal strip are mounted on a rigid bracket attached to the rear of the enclosure. Standard bayonet base lamps are available for operation from various power sources. The rear of the case, provided with an integral mounting bracket for surface mounting, is pre-drilled for easy routing of cables.

Indication lens for both types are available in heat-resistant color lenses, or stencil plates to suit the particular aspect indication scheme. Protective cover glasses provide easy care and long life. Hoods which provide added definition to each indication are available for each type. Dividers, attached to the rear of the front cover of both types, provide complete isolation of light sources to prevent false indications.

MOUNTING ARRANGEMENT

The Cab Aspect Indicator is arranged for surface mounting in a position such that its aspects are plainly visible.

NOTE: For installation and maintenance, see Service Manual 6008.

CAB ASPECT INDICATOR

ORDERING INFORMATION

Consult your WABCO representative for specific ordering information.

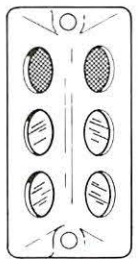

A

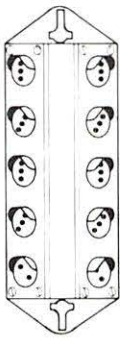

B

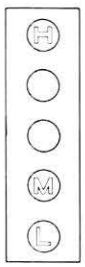

C

REF.	DESCRIPTION
A	3-INDICATION COLOR LIGHT CAB ASPECT INDICATOR
B	4-INDICATION POSITION LIGHT CAB ASPECT INDICATOR
C	5-INDICATION CAB ASPECT INDICATOR WITH STENCIL PLATES

WABCO

F-42 DC/DC CONVERTER

The F-42 DC/DC Converter is a completely transistorized power supply for use in train control systems. The unit operates on input voltages from 60 to 80 vdc and provides a 32 vdc output at 0 to 7.5 amps continuous over an ambient temperature range of -40° F (-40° C) to +160° F (+70° C).

DESCRIPTION

The converter is designed for horizontal or vertical mounting, is weather proof and can be located out of doors. Overall size is 9-1/2" x 9-7/32" x 16-1/2"; weight is 47 pounds.

Electrical connections to the converter are made to a 4-pin externally mounted receptacle. A mating plug is supplied for the users convenience. Input and output circuits are completely isolated from each other and ground by means of an isolating transformer. Plug-in circuit boards aid in minimizing maintenance time. Cooling fins built into the case help dissipate heat generated inside the unit.

FEATURES

- Starts under full load.
- Overload and short circuit protection.
- Withstands severe temperatures.
- Completely transistorized.
- Protected against abnormal input.
- Plug connected for quick and easy installation or removal.

OPERATION

The basic unit consists of an input filter, and overvoltage protective circuit, switching mode pre-regulator and a power inverter.

In operation, a drop in voltage to 45 vdc, will not damage the unit and the output will not go below 28 vdc. It is capable of starting with a lamp load of four 15 watt, 34 volt signal lamps in multiple and a resistance load as required to bring the total load to 240 watts.

Overloads to 11.25 amperes for ten minutes will not damage the unit. If a short circuit occurs across the output, operation will halt but is restored by opening the input circuit momentarily after the short is removed. A fuse protects the circuits from too high an input voltage.

The unit can withstand surge voltages to 20,000 volt for five microseconds to ground, and a 3000 vac, 60 Hz dielectric test at 1 ma maximum for one minute as follows: Input terminals shorted to chassis, output terminals shorted to chassis, or input terminals shorted to output terminals. A diode in the input circuit prevents reverse polarity application.

CHARACTERISTICS

The characteristics of the F-42 DC/DC Converter are tabulated below:

Input Voltage:	60 to 80 vdc, 5.1 amps
Output Voltage:	32 vdc ±5%
Ripple:	2.5% or less
Operating Temperature:	-40° F (-40° C) to +160° F (+70° C)

F42 DC/DC CONVERTER

ORDERING INFORMATION

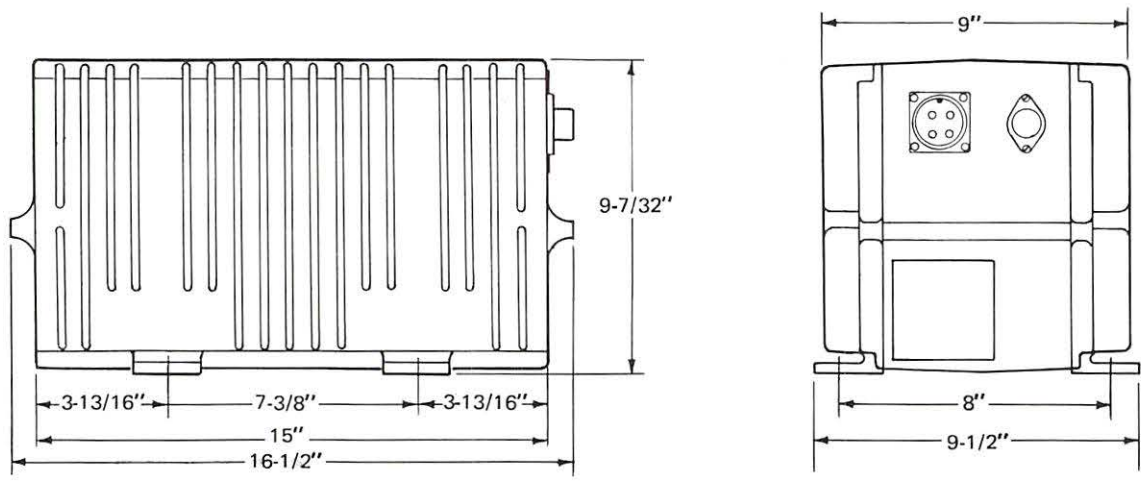

Order by Part Number and Description

PART NO.	DESCRIPTION
N451033-2901	F-42 DC/DC CONVERTER

LOCOMOTIVE PICK-UP COILS

US&S's EL Pick-Up Coils are available to suit virtually any installation. The units are ruggedly constructed to provide years of trouble-free service. Each unit is completely weatherproof and designed for easy installation in front of the leading truck. Two receiver coils, one mounted over each rail, are provided to minimize space requirements and to assure maximum reliability and fail-safe operation. Easy electrical connection is provided by an electrical junction box normally mounted mid-way between each receiving coil.

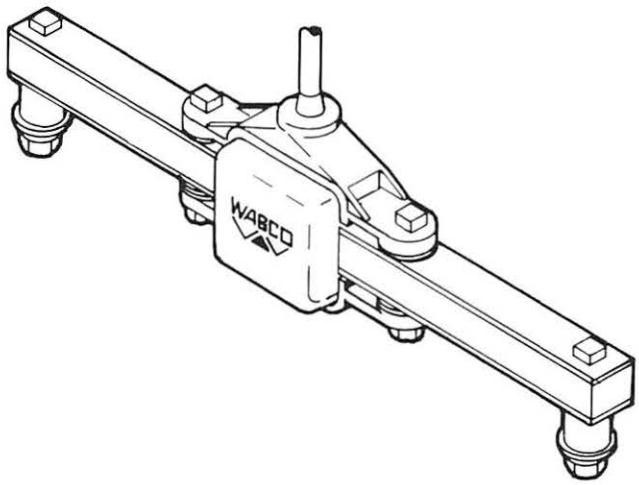

DESCRIPTION

The EL Pick-Up Coils consist of two receiver coils, cable harness assemblies, and an electrical junction box. Each receiver coil is a rubber encapsulated unit with an integral rigid support. The receiver coils are available in two configurations: one with an integral mounting bracket and one designed for frame mounting. A weatherproof cable outlet with attached prewired cable harness assembly enables quick and easy installation. Each cable harness assembly is terminated in the electrical junction box normally mounted midway above the receiver coils. The electrical junction box is a rugged, weatherproof unit equipped with an internal terminal board and pipe tap outlets to provide easy electrical connections. The Pick-Up Coil is available in several wiring configurations to suit the individual system design requirements.

MOUNTING ARRANGEMENT

Each unit is designed for mounting ahead of the leading truck. The cable harness assemblies are supplied in lengths suitable for most installations.

Pick-up coils are mounted inside of rails for stable signal reception. The coils may be mounted with or without a protective fiberglass enclosure.

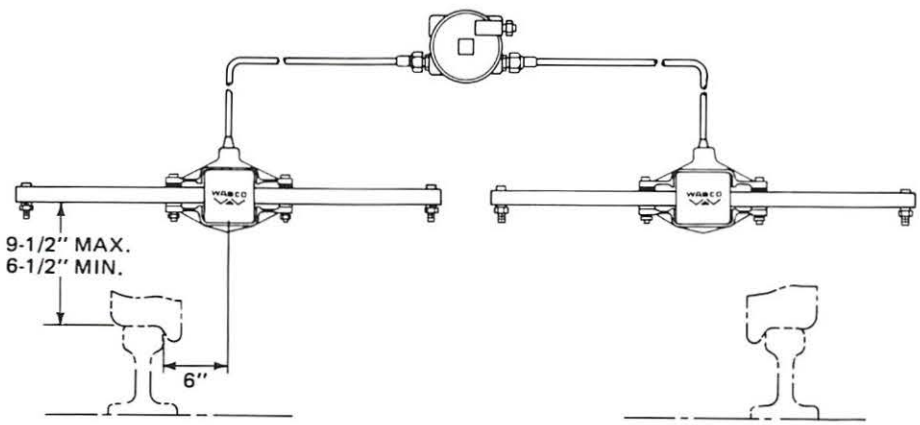

NOTE: For installation and maintenance, see Service Manual 5626 and 6008.

PICK-UP COILS
ORDERING INFORMATION

Order from the following tabulations by part number and full description.

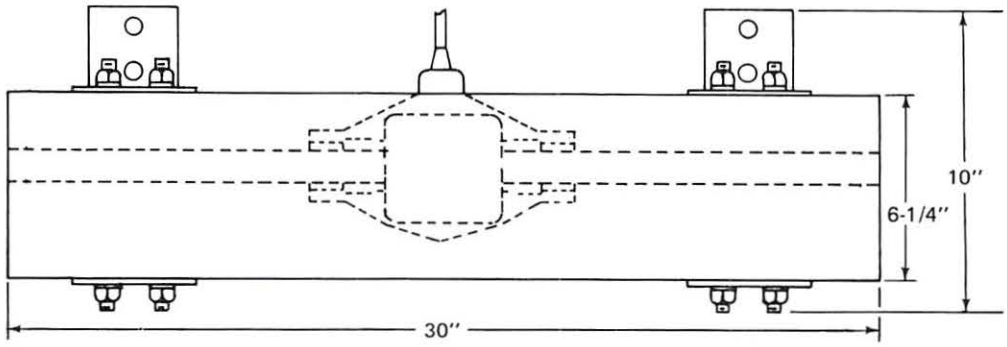

PART NO.	DESCRIPTION
X437205	PICK-UP COIL with protective fiberglas enclosure.

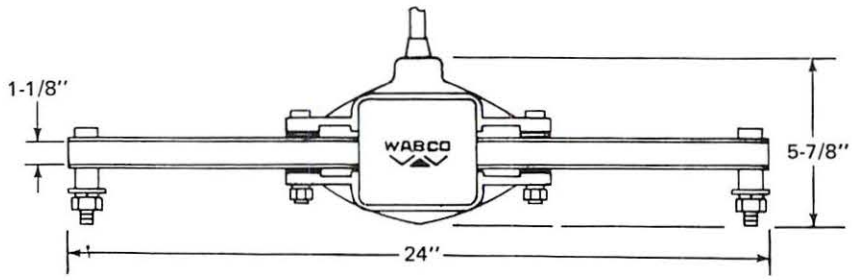

PART NO.	DESCRIPTION
X396284	PICK-UP COIL without protective fiberglas enclosure.

SPEEDOMETERS

Speedometers for use with US&S cab signal overspeed systems are available from US&S. The Speedometer is a rugged, compact unit designed for panel mounting in the vehicle cab. The meter movement is a standard D'Arsonval instrument calibrated in miles per hour or kilometers per hour and is equipped with a convenient front-mounted zero adjustment. Indicator lights placed concentrically around the Speedometer provide maximum permissible speed indications in conjunction with US&S's EL Cab Signal System. A convenient panel-mounted dimmer control enables the operator to tailor Speedometer lighting intensity to ambient light conditions. Electrical connections are made through a fully labeled 7-inch wire harness wired to the Speedometer.

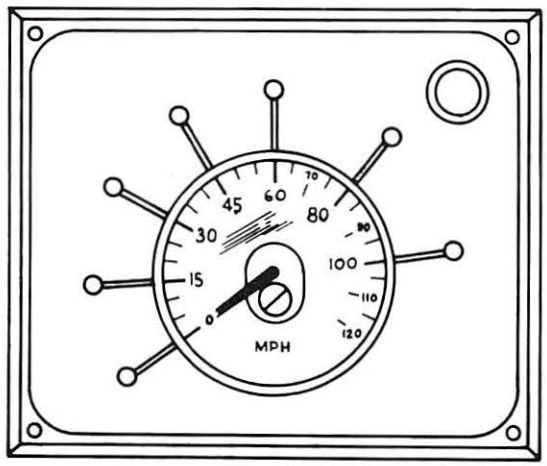

FEATURES

- Rugged construction.
- Ease of readability.
- Highly reliable.
- Built-in dimmer control.
- Calibrated in miles per hour or kilometers per hour.
- Integral speed limit indicators.
- Compatible with virtually any installation.

NOTE: For installation, maintenance, and detail parts see Service Manual 5931.

SPEEDOMETER ORDERING INFORMATION	
PART NO.	**DESCRIPTION**
N451126-0101	SPEEDOMETER, red indicator at 0 mph and white indicators at 15, 30, 45, 60, 80, and 120 mph.
N451126-0102	SPEEDOMETER, red indicator at 0 mph, white indicators at 15, 30, 45, 60, 80 and 100 mph, and green indicator at 120 mph

AXLE GENERATOR

US&S's Axle Generator is a compact, rugged unit of quality construction, designed for speed determination in speed control systems.

DESCRIPTION

The Axle Generator consists of a magnetic impulse generator enclosed in a rugged cast iron housing. The cast iron housing is completely waterproof and designed for easy installation. Electrical lead-in wires are routed through a special fitting designed for attachment of rubber tubing to afford maximum protection to the wiring from moisture and abrasion. The magnetic impulse generator consists of a rugged magnetic rotor and pick-up head.

OPERATION

The drive shaft, mechanically coupled to the end of the axle, drives an internal magnetic rotor. Magnetic segments placed radially around the outside edge of the wheel-shaped magnetic rotor induce a voltage in a magnetic pick-up head as the rotor rotates. The magnetic pick-up is placed in close proximity to the outside edge of the rotor. As the rotational speed of the rotor increases, the frequency of the output voltage from the pickup head increases. Thus the output frequency is a direct function of the drive shaft speed.

MOUNTING

Adapter plates specifically designed for the vehicle are available to mount the axle generator to the journal. Either flexible or solid shaft couplers are available to connect the axle generator to the axle.

FEATURES

- Rugged construction—high reliability.
- Long service life.
- Completely weatherproof.
- Easily installed.

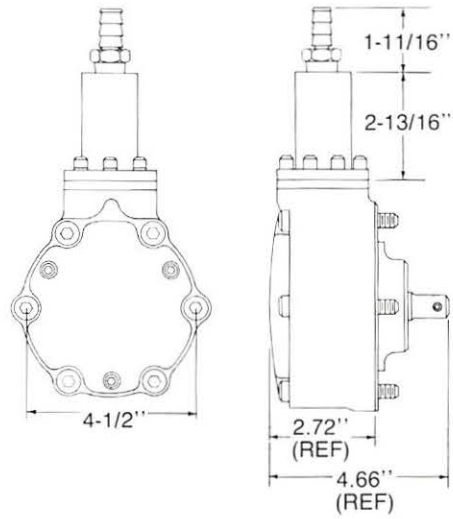

PART NO.	451125-7001

NOTE: For detail parts and additional information, refer to service manual SM5856.

EM-1 AUTOMATIC TRAIN STOP

The EM-1 Automatic Train Stop is used in conjunction with wayside signaling and control systems to provide a means of activating the train braking mechanism (provided by others) if observance and compliance of restrictive signals are not made.

The equipment is housed in a cast-iron case and consists of a 110 volt ac motor and gear case, circuit breaker with driving trip arm, compression return spring and sector. When power is interrupted, the trip arm automatically assumes the stop position.

OPERATION

The EM-1 trip arm is driven under power to the clear position (1/2" below top of running rail). When power to the unit is interrupted for any reason, a compression spring moves the trip arm above the running rail. When this happens, and if the car carried equipment is in a position to interface and react with the train stop device, the trip arm will engage the brake trip air cock on the train passing over it. Providing that all equipment is functioning properly, this will initiate train stopping sequence.

MOUNTING INFORMATION

The unit is to be installed on mounting plates midway between rails. The rocker shaft may be fastened for either right or left side operation as required. AC power can be obtained from the railroad field wiring.

EQUIPMENT SPECIFICATIONS

Operating voltage . . . . . 110 volts, 60Hz
. . . . . 110 volts, 25Hz

Current at Normal
Voltage (approx.) . . . . . 1.5 amp (In Rush)
0.75 amp (Holding)

NOTE: Mechanism (Trip Arm) should return to the stop position when the voltage is reduced to 60 volts or less.

FEATURES

- Rugged construction for long service life.
- Adjustable to specific railroad requirements.
- Pre-lubricated sealed motor bearings.
- Right or left hand operation.
- Available with heater.

TYPICAL TRAIN STOP LAYOUT

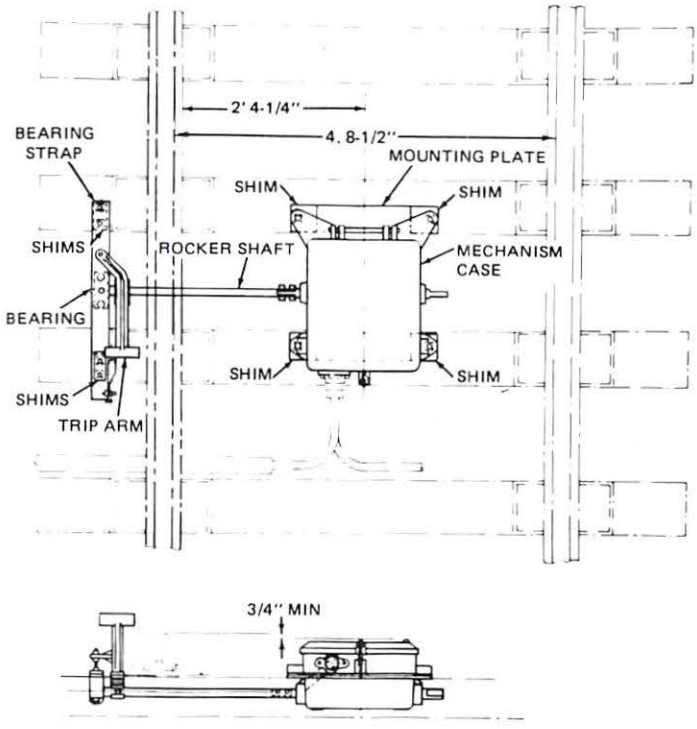

EM-1 AUTOMATIC TRAIN STOP, SPLINE COUPLING

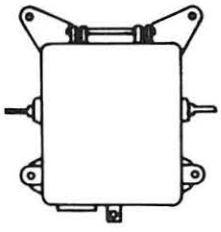

PART NO.	DESCRIPTION
N387658-001	EM-1, W/O HEATER, 60 Hz, 20-20 MFD capacitor combination for tripper arm 2-1/2" to 3" above rail.
N387658-003	EM-1, WITH HEATER, 60 Hz, 15-25 MFD capacitor combination for tripper arm 3-1/2" above rail.
N387658-004	EM-1, W/O HEATER, 60 Hz, 15-25 MFD capacitor combination for tripper arm 3-1/2" above rail.
N436240	EM 1, W/O HEATER, 25 Hz, 35-50 MFD capacitor combination.

EM-1 AUTOMATIC TRAIN STOP, UNIVERSAL COUPLING

60 Hz, 20-20 MFD capacitor combination for tripper arm 2-1/2" to 3" above rail.

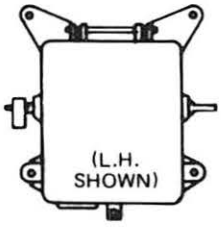

PART NO.	DESCRIPTION
N387658-002	EM-1, LEFT HAND, W/O HEATER,
N387658	EM-1, RIGHT HAND W/O HEATER,
N388403	EM-1, RIGHT HAND WITH HEATER

For detail parts and additional information, refer to service manual SM5730.

WABCO

6-CODE TEST SET

The 6-Code Test Set is a versatile, portable, test signal generator designed to produce coded carrier test signals for use in adjusting, testing, and troubleshooting railway coded cab signaling equipment.

The 6-Code Test Set is truly universal, in that it provides a multitude of carrier frequencies code rates, and track currents to suit numerous test applications. The test set produces coded carrier signals with selectable code rates of 50, 75, 120, 180, 270, and 420 Hz and selectable carrier frequencies of 60 and 100 Hz. Track current is continuously adjustable in 0.5, 1, 2, and 3 ampere ranges.

The equipment, which is fully transistorized and designed to operate from a 117 vac, 60 or 100 Hz power source, requires a minimum of maintenance.

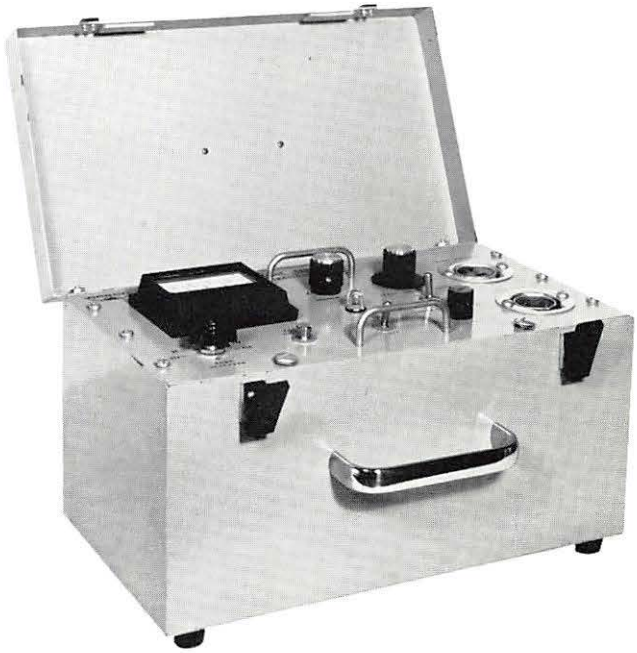

PRINTED IN U.S.A.

UNION SWITCH & SIGNAL DIVISION
AMERICAN STANDARD INC. / SWISSVALE, PA 15218

RSE-15D1
9/75

WABCO

DESCRIPTION

The WABCO 6-Code Test Set consists basically of a self-contained test signal generator comprising five printed circuit boards, front panel controls and indicators, and associated components.

The components are housed in a rugged sheet steel enclosure of light weight construction, and incorporates a removable cover which is designed to protect the front panel controls and indicators.

Connections for power and test circuits are made through convenient front panel jacks. All controls and indicators are located on the front panel.

OPERATION

The code test set is a fully transistorized test signal generator designed to produce continuously coded carrier output signals.

The front panel code rate switch enables one of six code rate oscillators. The selected code rate oscillator's output is then routed to either the 60 or 100 Hz carrier oscillator, as selected by the front panel track frequency selector switch. The carrier oscillator generates the carrier signal and codes the carrier at the selected code rate. The coded carrier signal is then fed to a power amplifier and output transformer for power amplification and impedance matching. The resultant signal is then fed through the front panel track circuit output jack to a test loop secured between the rails of the test track. The signal is coupled to the car-carried receiver coils, thus facilitating test, adjustment, and troubleshooting of the coded cab signaling equipment.

Since the code test set is completely portable, wire test loops can be laid out at several locations, and the code test set is moved around to each location as necessary.

FEATURES

- Light weight — completely portable.
- Solid state design — high reliability.
- Versatile — selectable code rates and carrier frequencies. Continuously adjustable track current output.
- Utilizes printed circuit boards — easy replacement, minimum downtime.
- Ease of operation.

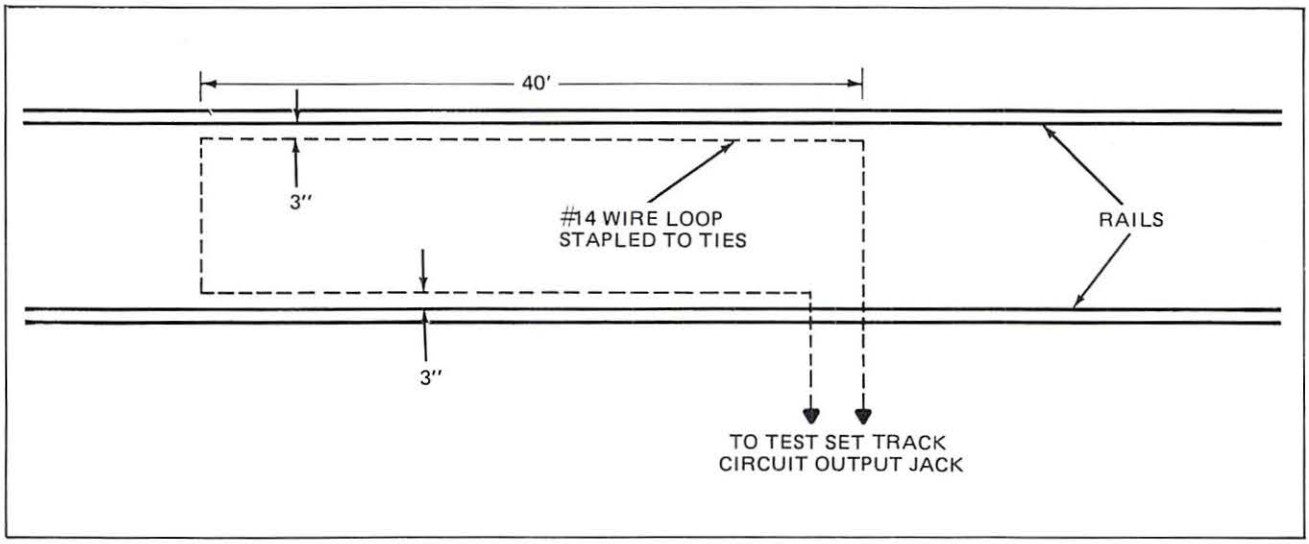

TEST LOOP CONNECTIONS

CHARACTERISTICS

Input Voltage	115 vac, 60 or 100 Hz
Input Current	Approximately 0.25 amp max.
Output Carrier Frequency	Selectable, 60 or 100 Hz, ±1 Hz
Output Code Rate	Selectable, 50, 75, 120, 180, 270, or 420 Hz, ±1%
Output Track Current	Continuously adjustable, 0-0.5-1-2-3 ampere ranges
Output Impedance	0.2 ohms nominal
Operational Temperature Range	40° C to +70° C (-40° F to 258° F)
Size	13-3/8" x 9-11/16" x 7-1/4"
Weight	Approximately 15 pounds

6-CODE TEST SET

ORDER PART NO. N451088-1901

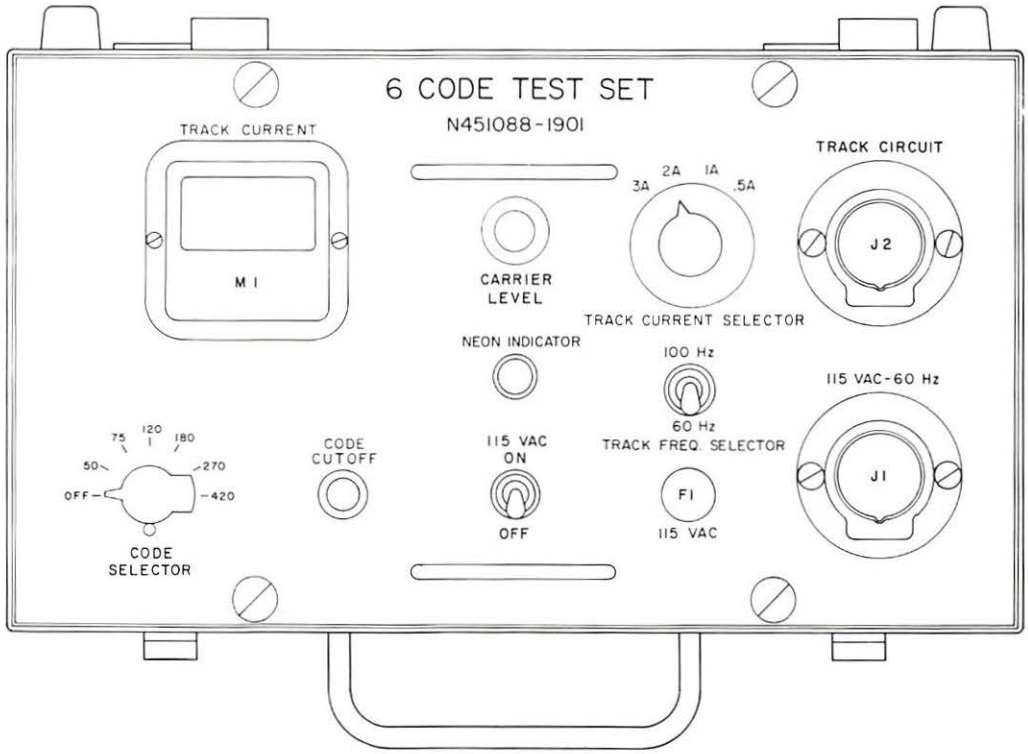

HEIGHT	WIDTH	DEPTH
9-11/16"	13-3/8"	7-1/4"

VITAL PLUG-IN DC CAB SIGNAL RELAYS
(Neutral)

PN-59

This catalog section covers the PN-59 Neutral DC Relay. It is designed primarily for use in cab signaling applications.

GENERAL INFORMATION

The PN-59 is a neutral dc relay designed for use in cab signaling and train control equipment. Its unique design makes it ideally suited for applications in locomotives where vibration problems are encountered. Besides the standard ordinary-acting version, this relay is available in slow drop-away and slow pick-up versions.

ORDERING INFORMATION

Order from the tabulations that follow which contain part numbers and specificataions for the relays. A mounting base is required for each relay and must be ordered separately. Order by part number provided. For information on mounting plug-in relays, such as rack dimensions, etc., refer to Catalog Section RSE-4.

RELAY	MOUNTING BASE
N435377	N265276-
N435377-0001	N265276-
N273665	N265276-
N436928 001	N303083-001
N451130-0301	N373068-

PN-59 RELAY, DC NEUTRAL ORDINARY-ACTING

PART NO.	COIL RESIS. OHMS	DROP-AWAY MINIMUM AMPS	DROP-AWAY MINIMUM VOLTS	DROP-AWAY MAXIMUM AMPS	DROP-AWAY MAXIMUM VOLTS	PICK-UP MINIMUM AMPS	PICK-UP MINIMUM VOLTS	PICK-UP & WORKING AMPS	PICK-UP & WORKING VOLTS
N435377	32.0	0.015	0.48			0.030	0.96	0.0375	1.2
N435377-0001	32.0	0.022	0.70	0.023	0.74	0.030	0.96	0.0375	1.2

NOTE: For detail parts and additional information, refer to service manual SM5624-B.

PN-59 RELAY, DC NEUTRAL SLOW DROP-AWAY (SLOW RELEASE)

PART NO.	COIL RESIS. OHMS	DROP-AWAY MINIMUM		PICK-UP MINIMUM		PICK-UP & FULL STROKE MAXIMUM		WORKING VALUE 1.1 SECOND RETARDATION	
		AMPS	VOLTS	AMPS	VOLTS	AMPS	VOLTS	AMPS	VOLTS
N273665	40.0	0.015	0.6	0.030	1.2	0.0375	1.5	0.052	2.08

NOTE: For detail parts and additional information, refer to service manual SM5624-A.

PN-59 RELAY, DC NEUTRAL SLOW PICK-UP

PART NO.	COIL RESIS. OHMS	DROPAWAY MINIMUM		PICK-UP & FULL STROKE MAXIMUM		WORKING VALUE FOR 1.2 SECOND PICK-UP TIME	
		AMPS	VOLTS	AMPS	VOLTS	AMPS	VOLTS
N436928-001	40.0	0.020	0.8	0.046	1.84	0.075	3.0

NOTE: For detail parts and additional information, refer to service manual SM5624-C.

PN-59 RELAY, DC NEUTRAL SLOW PICK-UP (SPECIAL)

PART NO.	COIL RESIS OHMS	DROPAWAY MINIMUM		PICK-UP MIN.		PICK-UP MAX.		WORKING VALUE	
		AMPS	VOLTS	AMPS	VOLTS	AMPS	VOLTS	AMPS	VOLTS
N451130-0301	420	0.0048	2.0	0.0124	5.2	0.0129	5.4	0.0167	32

NOTE: For detail parts and additional information, refer to service manual SM5624-C.

Contacts: 4F-4B, LV

Front - Silver to silver impregnated carbon

Back - Silver to silver

VITAL PLUG-IN DC CAB SIGNAL RELAY
(Neutral)

PN-159B

This catalog section covers the PN-159B Neutral D.C. Relay. It is designed primarily for use in cab signaling applications.

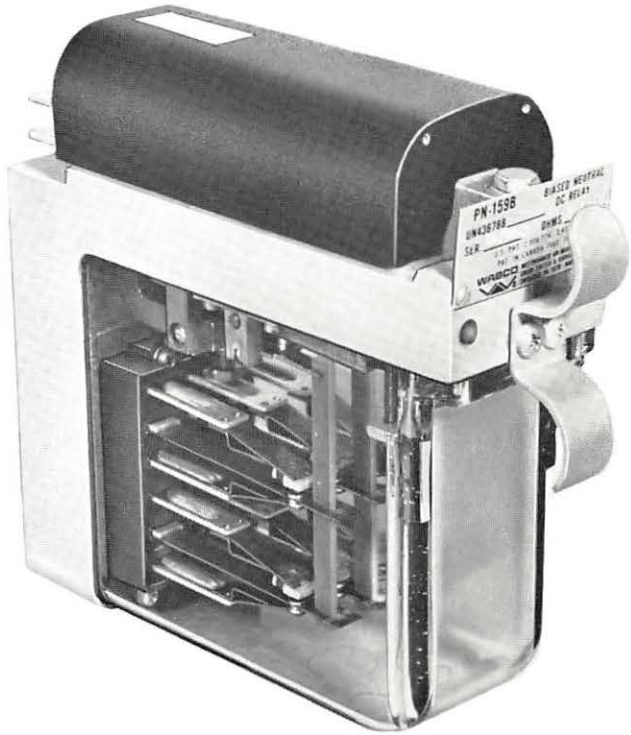

GENERAL INFORMATION

The PN-159B is a neutral dc relay designed and developed for car-carried vital applications. It is a 24 volt biased relay. The coil resistance is 400/400 ohms. Contacts are standard 6FB, LV. The front contacts are silver to silver impregnated carbon; the back contacts are silver to silver.

ORDERING INFORMATION

The tabulation that follows contains specifications for the relay.

A mounting base is required for each relay and must be ordered separately. Order by part number provided. For information on mounting plug-in relays, such as rack dimensions, etc, refer to Catalog Section RSE-4.

PART NO.	DESCRIPTION
N436797	Mounting Base
R451299-0102	Hold Down Bolts (2 req.)

PN-159B RELAY
PART NO. N436788

COIL WIND. A RESIS. OHMS	COIL WIND. B RESIS. OHMS	CHARGE VOLTS	DROP-AWAY MIN. VOLTS	DROP-AWAY MAX. VOLTS.	FULL BACK CON. PRES. D. A. VOLTS MIN.	MAX. PICK-UP & WORKING MIN. VOLTS	MAX. PICK-UP & WORKING MAX. VOLTS
400	—	66	9.4	10.6	6.0	15.5	16.5
—	400	66	9.4	10.6	6.0	15.5	16.5
800 (Series)		66	9.4	10.6	6.0	15.5	16.5
200 (Mult.)		33	4.7	10.6	3.0	7.75	8.25

NOTE: For detail parts and additional information, refer to service manual SM4551-W

VITAL PLUG-IN DC CAB SIGNAL RELAYS
(Neutral)

PL-59

This catalog section covers the PN-59 Neutral D.C. Relay. It is designed for Automatic Train Control on US&S Type "EL" Cab Signal Systems

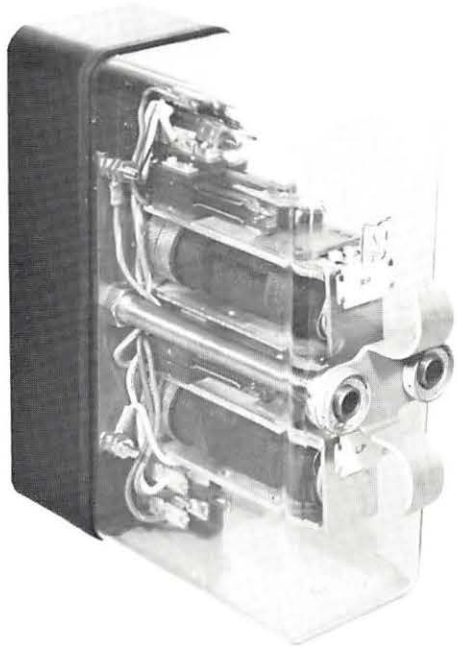

GENERAL INFORMATION

The PL-59 Relay is available with two double coil relays; one a pick-up coil, the other, a stick-holding coil. The contacts of the coils are internally wired for use in acknowledging circuits.

ORDERING INFORMATION

Order from the tabulation that follows which contains part numbers and specifications for the relays.

A mounting base is required for each relay and must be ordered separately. Order by part number provided. For information on mounting plug-in relays, such as rack dimensions, etc, refer to Catalog Section RSE-4.

RELAY	MOUNTING BASE
N386991	N286167
N392637	N373068

PART. NO.	COIL RESIS.-OHMS		MAX. FULL STROKE VOLTS	MIN. D. A. VOLTS	D. A. RETARDATION			
					MIN.		MAX.	
	COIL A	COIL B			VOLTS	SEC.	VOLTS	SEC.
N386991	380/380	380/380	22	1.5	-	-	-	-
N392637	380/380	380/380	22	1.5	26	0.25	36	0.45

NOTE: **For detail parts and additional information, refer to service manual SM4549.**

Lose Something?

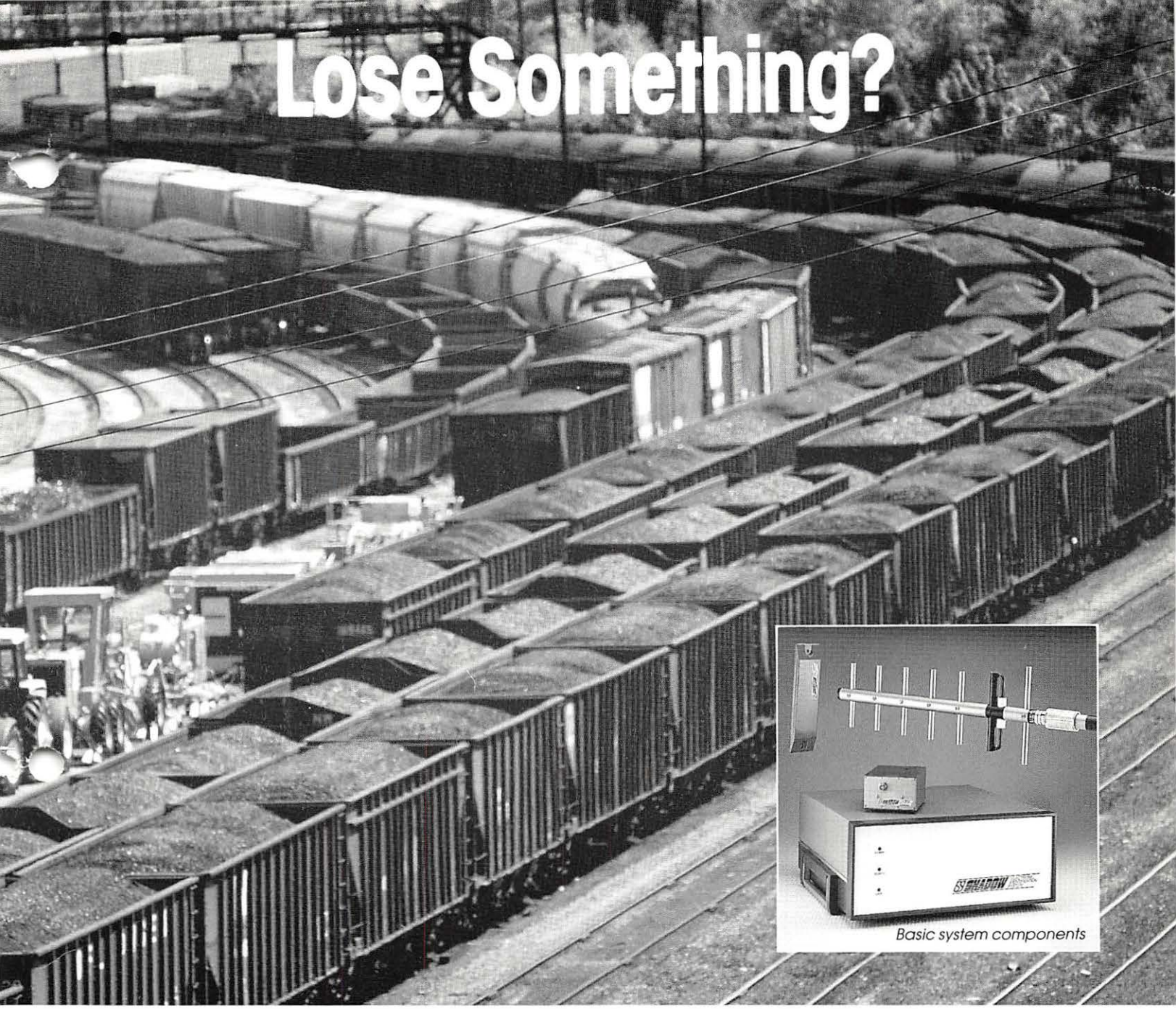

Basic system components

It can be avoided... with SHADOW™ Electronic Identification Systems from Union Switch & Signal.

Even on a clear day, keeping track of rolling stock can be a nightmare. In rain, snow, fog or pitch darkness, it's almost impossible.

Not anymore. Now, there's an automated, RF-based ID system that can instantly identify any piece of rolling stock in your fleet. Day or night. Rain or shine. Even in zero visibility. The SHADOW Electronic Identification System.

With a SHADOW system, there's no need for time-consuming visual identification. That means no checklists, no miscopied data and no more holdups due to faded or illegible markings. The SHADOW system's unique combination of lightweight, rugged transponder tags and solid-state RF readers gives fast and accurate identification. Time after time.

Check out our features:

- Superior Performance: Unaffected by moisture, extreme temperatures, vibration, snow, darkness or other RF or electrical fields.
- Proven Accuracy: Consistent reads to 70 feet at 180 mph with virtually no read errors.
- Versatile: Rugged, durable and programmable transponder tags are low cost, maintenance free and mount easily on vehicles or at trackside.

The SHADOW system can also identify trackside locations with tags mounted at wayside and readers on-board. Possible applications include dark territory control, advanced train control systems (ATCS) and track geometry-milepost identification. Regardless of how you use it, the SHADOW system is easily and effectively integrated into your operation.

Are you running a railroad... or a lost and found? Write us today for more information about the SHADOW Electronic Identification System. Or call us direct at 1-800-351-1520 or 412-366-2400.

SHADOW systems. State-of-Tomorrow Technology, today... from Union Switch & Signal.

UNION SWITCH & SIGNAL

5800 Corporate Drive
Pittsburgh, PA 15237

VEHICLE CONTROL SYSTEMS

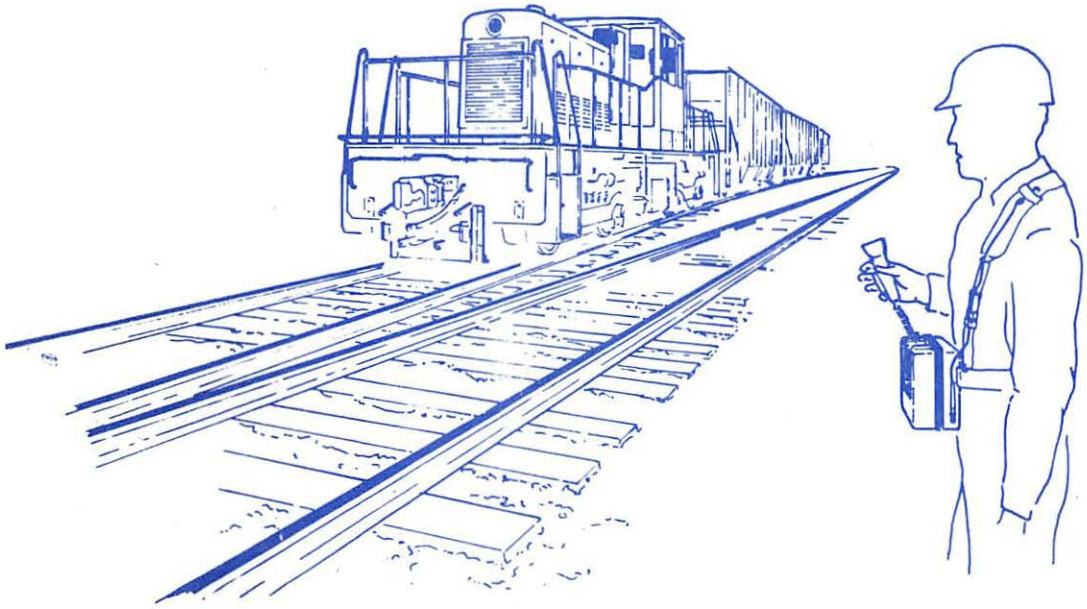

RSE-16

ACCESSORIES

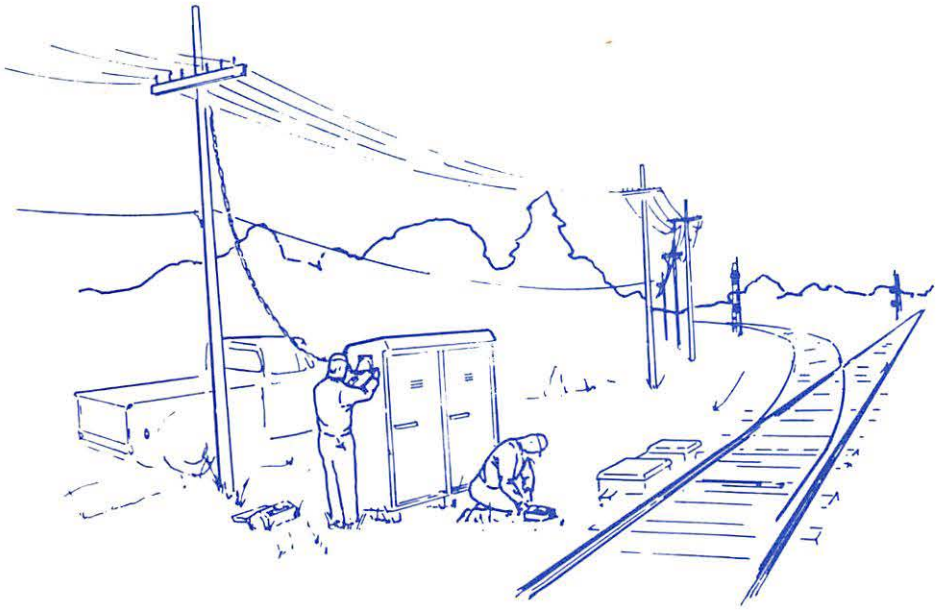

RSE-17

ACCESSORIES

USG-A Lightning Arresters RSE-17A1
USSP Secondary Surge Protectors RSE-17A2

Lamps for Signal Light Applications RSE-17B1

USG-A E-Z Vue LIGHTNING ARRESTERS

USG-A E-Z Vue Lightning Arresters reduce the chances of damage to electrical and electronic equipment from lightning strokes. As a result, they help minimize service disruptions and equipment down-time. These units incorporate the latest in lightning arrester technology, and are available in several models to satisfy most applications, including high voltage, low voltage and ac line.

DESCRIPTION

USG-A E-Z Vue Lightning arresters are designed to limit surge voltage transients on electrical equipment below breakdown voltage, and minimize surge current through the equipment. They are provided as separate units, or are mounted on a terminal block. Typical applications are shown at the lower right.

The Low Voltage Arrester employs a surge-protected varistor in parallel with a high-durability air gap formed by the separation of two heavy brass discs. Static charges are bled off by the varistor, and fast-rising transients are immediately clipped with a minimum of overshoot. Varistor material is protected against heavy surge currents. The air gap is separated by a teflon spacer. This spacer is designed to maintain precise spacing, while resisting carbon-tracking or burning.

The High Voltage Arrester employs two high durability air gaps in series. One gap is formed by the separation of a resistor surface from a brass surface. The other gap is formed by the separation of two heavy brass discs. Teflon spacers are also provided for both air gaps.

The AC Line Arrester employs five high durability air gaps in series. Each gap is the same used in the Low Voltage Arrester.

USG-A E-Z Vue Lightning Arresters are equipped with a high-strength, clear Lexan® cover that permits visual inspection of internal components, and contains the explosive effects of heavy surges. Part numbers are stenciled and color-coded for quick identification of different units.

HOW TO ORDER

Order the USG-A E-Z Vue Lightning Arrester from the tabulation below. Note that the each arrester can be ordered as part of a complete terminal block assembly with mounting hardware.

PART NO.	DESCRIPTION	
N451552-0101	Low Voltage (Blue)	Operating Voltages: 32 Vdc, 25 Vac Firing Voltage: 75-200 Vdc, 50-100 Vac (60 Hz) Resistance: $\geq 10^3$ ohms @ 32 Vdc
N451552-0201	High Voltage (Red)	Operating Volt.: 250 Vdc, 175 Vac Firing Voltage: 500-3000 Vdc, 350-950 Vac Resistance: $\geq 10^9$ ohms @ 100 Vdc
N451552-0401	AC Line (Yellow)	Operating Voltage: 140 Vac Resist: $\geq 5 \times 10^3$ ohms @ 120 Vac
X451552-0301	Low Voltage Arrester, with AAR terminal block and mounting hardware.	
X451552-0302	High Voltage Arrester, with AAR terminal block and mounting hardware.	
X451552-0306	AC Line Arrester, with AAR terminal block and mounting hardware.	

FEATURES

- In-line contacts, terminals minimize surge damage
- Heavy terminals and contacts withstand high currents.
- Plated parts resist atmospheric corrosion.
- Lexan® cover allows inspection, shields explosive effects.
- High and low firing voltage ranges compatible with standard circuit wiring.
- Color coded part number stencils for quick unit ID.
- Standard AAR mounting
- Low overshoot minimizes damage to sensitive electronic equipment from fast-rising surges.
- Low Voltage Arrester: Air gap in parallel with varistor material to dissipate static charge build-up.
- High Voltage Arrester: Air gap in series with varistor material to achieve low firing range, while minimizing possibility of air gap shortage.
- Self-cleaning design.

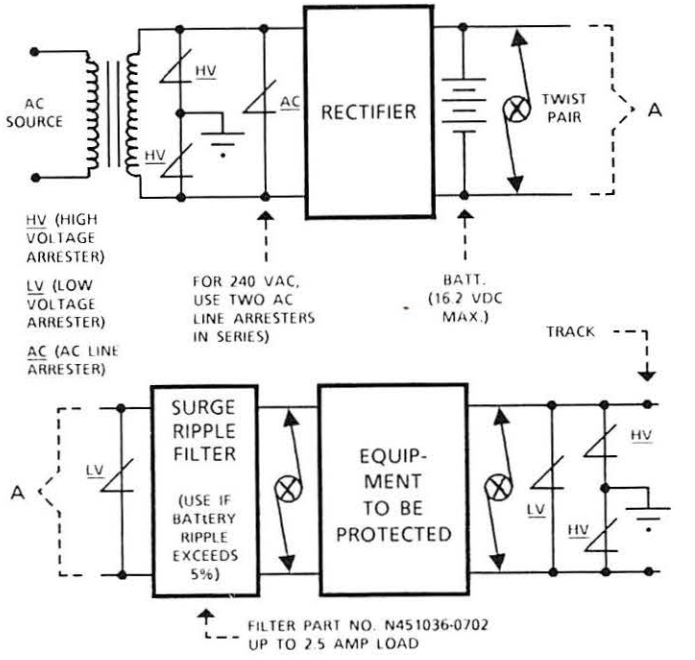

COPYRIGHT 1988, UNION SWITCH & SIGNAL INC.

USG-A LIGHTNING ARRESTERS

USG-A Lightning Arresters play an important role in reducing the possibility of damage to equipment and associated down time. Incorporating the latest in lightning arrester technology, US&S lightning arresters are available to satisfy most applications. High voltage, low voltage types and ac line types are available.

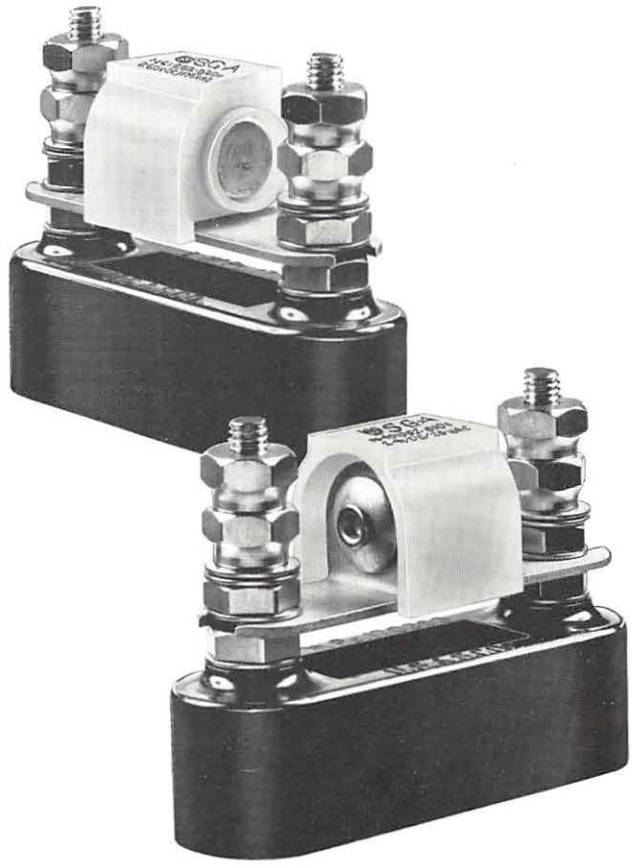

DESCRIPTION

USG-A lightning arresters limit the surge voltage transients impressed on equipment below breakdown voltage and minimize surge current through the equipment.

USG-A line arresters employ five air gaps in series. Each air gap is essentially the same used in the USG-A low voltage arrester.

FEATURES AND BENEFITS

- In-line contacts and terminals minimize chance of damage from heavy surges.
- Heavy terminals and contacts withstand high surge currents.
- Plated metal parts resist atmospheric corrosion.
- Thick flexible nylon covers resist explosive force of heavy surges, minimize damage from flying pieces; resist fire.
- High and low firing voltage ranges are compatible with standard circuit wiring.
- Color coded for quick identification of high and low voltage arresters.
- Standard AAR mounting — compatible with existing arrester mounting arrangements.
- Low overshoot minimizes damage to sensitive electronic equipment from fast rising surges.
- Air gap in parallel with varistor material (low voltage arrester) to dissipate static charge build-up.
- Air gap in series with varistor material (high voltage arrester) to achieve low firing range while minimizing possibility of air gap shortage.
- Special construction provides self cleaning.

A typical application using a low voltage lightning arrester N451552-0101 and high voltage lightning arrester N451552-0201 is shown in Figure 1. Figure 2 shows a typical application of an ac line arrester. Also, the new USG-A arresters can be used in existing applications to replace older arresters with an added margin of safety.

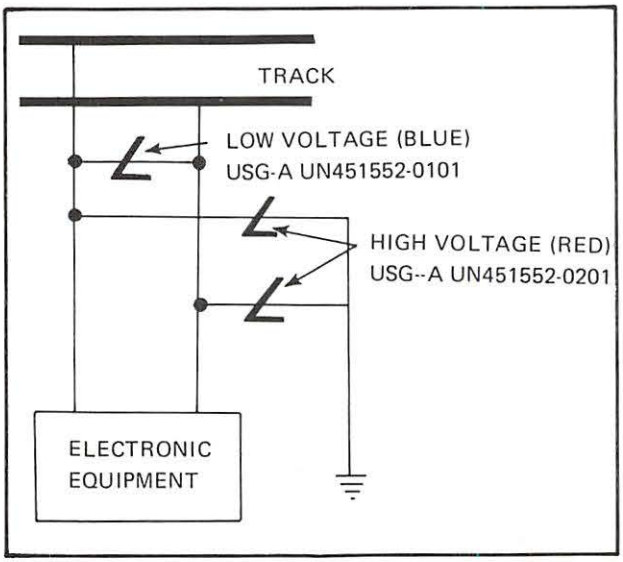

Figure 1. Typical High and Low Voltage Lightning Arrester

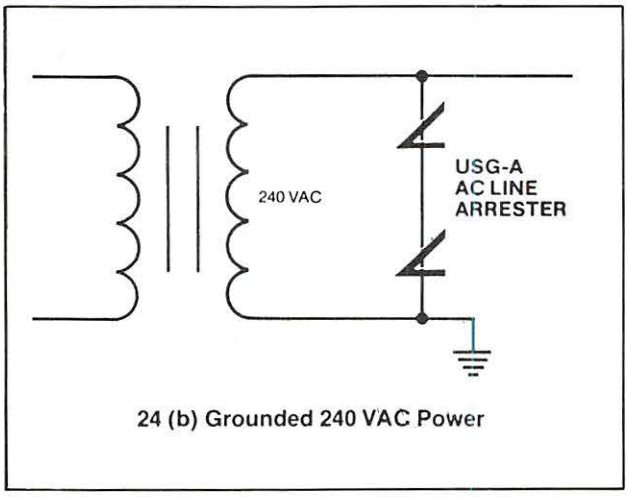

Figure 2. Typical AC Line Arrester Application

OPERATING CHARACTERISTICS

LOW VOLTAGE ARRESTER

Operating voltage	32 VDC
	25 VAC
Firing Voltage	*75-200 VDC
	*50-150 VAC (60 Hz)
Power Drain	<1 W (at operating voltages)
Resistance	>1 K ohms (at operating voltages)

Includes margin for varistor action

HIGH VOLTAGE ARRESTER

Operating Voltage*	175 VAC
	250 VDC
Firing Voltage	500-1300 VDC
	350-950 VAC (60 Hz)
Parallel Capacitance	<110 pfd
Resistance	$>10^9$ ohms

Note—When higher operating voltages are required, two or more USG-A Arresters are used

AC LINE ARRESTER

Operating Voltage	140 VAC
Firing Voltage	900-1500 VDC
Resistance	$\geq 5 \times 10^3$ ohms @ 120VAC

APPLICATION

LOW VOLTAGE ARRESTER

Track Leads

Battery Lines

Low Level Signal Leads

HIGH VOLTAGE ARRESTER

Circuits below 175 VAC or 250 VDC applied voltage

PRINCIPLES OF OPERATION

LOW VOLTAGE ARRESTER

The USG-A low voltage arrester uses a varistor in parallel with an air gap. When surge voltage transients are applied, the voltage gradient breakdown on the varistor surface initiates ionization in the parallel heavy brass contact air gap. Over voltages are limited within 50 nanoseconds, minimizing voltage overshoot from high rate-of-rise voltage transients. In addition, the shunt connection as shown in Figure 1, has a constant bleeding action to prevent build-up of static charges.

Important typical characteristics of the USG-A low voltage arrester are shown graphically in Figures 3, 4, and 5. The voltage current characteristics of the arrester are shown in Figure 2 for applied dc voltages up to 75 V. The R=1K ohms and P=1W are references to show that at recommended operating voltages P is less than 1W and R is greater than 1K ohm.

Figure 4 shows firing voltage of the USG-A arrester as a function of voltage rise rate. The performance of the USG-A arrester for very fast voltage rise rates (≧5000 V/μsec.) is of particular interest. Standard gap arresters typically exhibit an exponential rise in firing voltage for these fast rise rates; however, with varistor material in the USG-A low voltage arrester, it shows only slight increase in firing voltage.

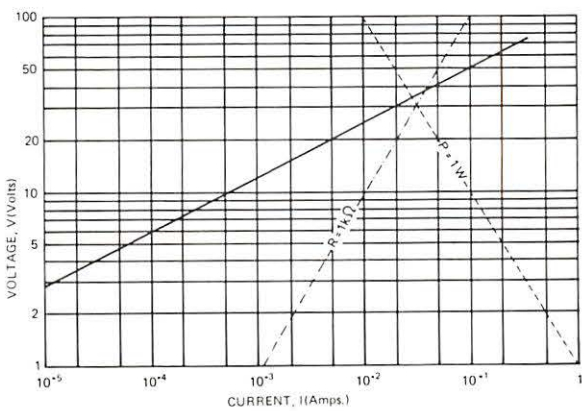

Figure 3. V-1 Characteristics of USG-A Low Voltage Arrester

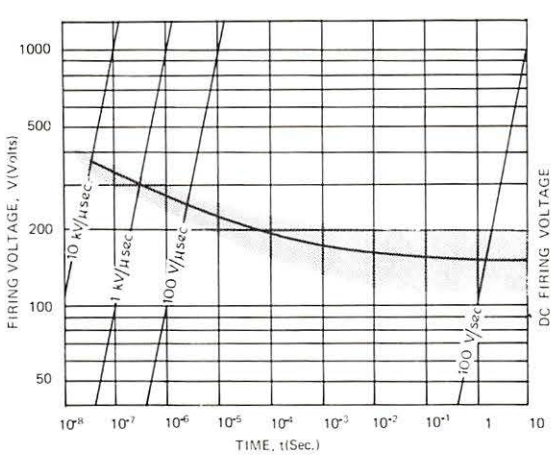

Figure 4. Firing Voltage vs. Voltage Rise Rate for USG-A Low Voltage Arrester (Shaded Area Indicates Dispersion)

Figure 5 gives surge capacity ratings of the USG-A low voltage arrester with peak surge current shown versus current duration.

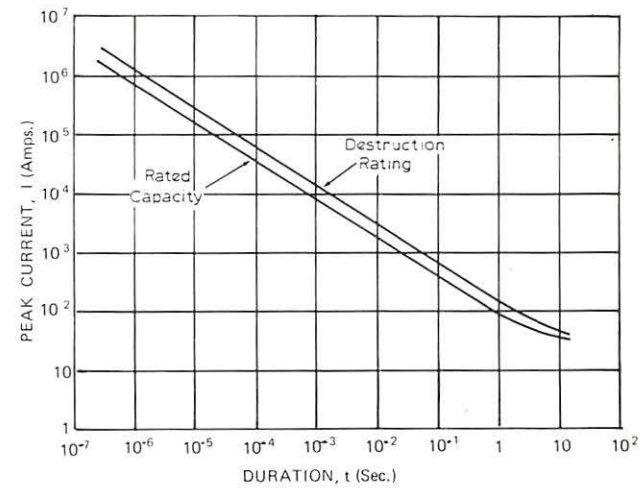

Figure 5. Surge Capacity of USG-A Arrester

HIGH VOLTAGE ARRESTER

The USG-A high voltage arrester has varistor material in series with the air gap. When surges are applied, the presence of the series varistor in the air gap narrows the firing range by permitting the use of a smaller air gap, but without the danger of shorting that would exist if the smaller gap was between two metal contacts only. In addition, the series varistor tends to rob power from the arc, thus helping limit follow-through current.

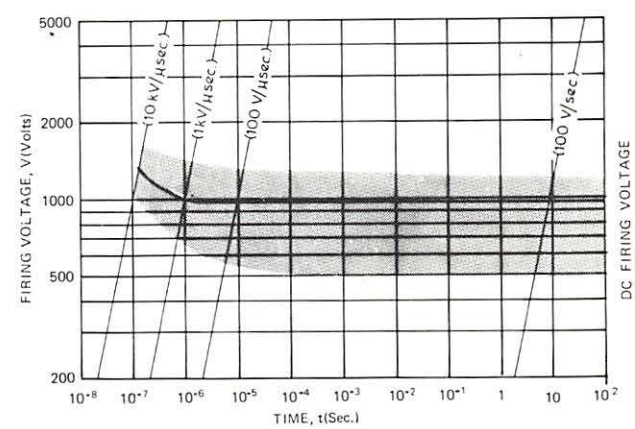

Figure 6. Firing Voltage vs. Voltage Rise Rate for USG-A High Voltage Arrester (Shaded Area Indicates Dispersion)

The important typical characteristics of the USG-A high voltage arrester are shown in Figures 5 and 6. Figure 5 shows surge capacity rating, and Figure 6 shows firing voltage as a function of voltage rise rate.

USG-A LIGHTING ARRESTERS WITH AAR TERMINAL BLOCK

PART NO.	DESCRIPTION
X451552-0301	USG-A LOW VOLTAGE LIGHTNING ARRESTER, 32vdc/25vac, (Blue), with 2-3/8" AAR terminal block.
X451552-0302	USG-A HIGH VOLTAGE LIGHTNING ARRESTER, 250 vdc/175 vac, (Red), with 2-3/8" AAR terminal block.

USG-A AC LINE ARRESTER

PART NO.	DESCRIPTION
X451552-0306	USG-A AC LINE arrester, 140 vac, (Yellow) with 3" AAR terminal block.

Height 15/16" Width 3-1/8" Depth 1"

USG-A LIGHTNING ARRESTERS WITHOUT TERMINAL BLOCK

PART NO.	DESCRIPTION
N451552-0101	USG-A LOW VOLTAGE LIGHTNING ARRESTER, 32 vdc/25 vac (Blue).
N451552-0201	USA-G HIGH VOLTAGE LIGHTNING ARRESTER, 250 vdc/175vac (Red).

USG-A AC LINE ARRESTER

PART NO.	DESCRIPTION
N451552-0401	USG-A AC LINE ARRESTER, 140 vac, (Yellow)

USSP SECONDARY SURGE SUPPRESSORS

US&S Secondary Surge Suppressors (USSP) help to limit electrical surges to solid state equipment. This is accomplished by using various combinations of primary arresters with fast precise solid state suppressors in conjunction with inductance coils.

This product line covers track circuit, power line, and battery line applications. (See Diagram C, page 2 for typical application). The USSP series are self contained, easy to install, and feature multi-level surge protection. The devices help provide protection against lightning-associated surges compared to lightning arresters alone.

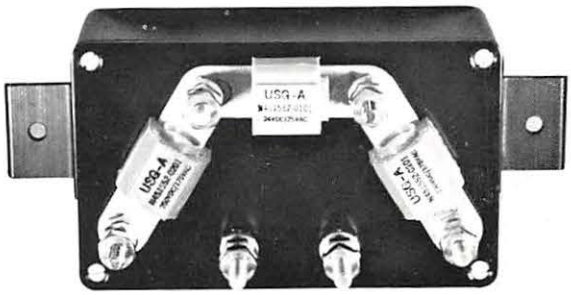

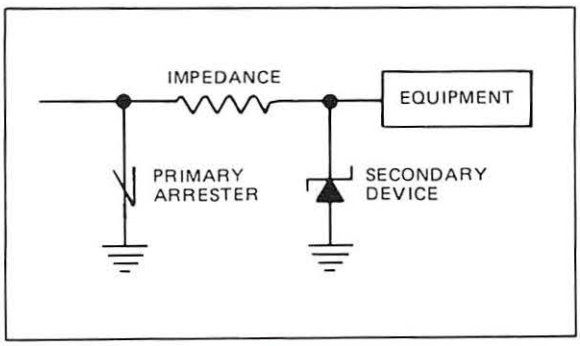

DIAGRAM A

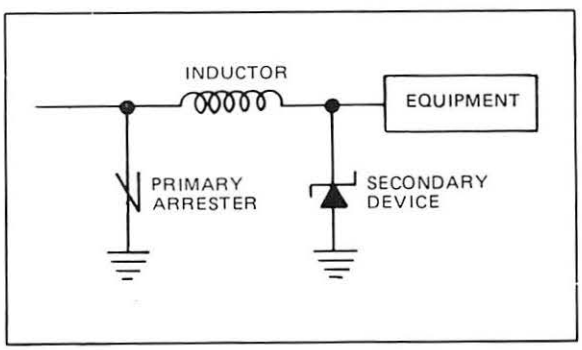

DIAGRAM B

PRINCIPLES OF OPERATION

Since Primary Devices can carry large surge currents but permit some "overshoot", and secondary devices limit "overshoot" but cannot carry heavy currents, a combination of these two devices helps to limit surges more effectively (See Diagram A). It isn't enough to parallel the two since the Secondary Device may carry enough current to destroy itself before the voltage gets high enough to turn on the Primary Device. This problem is solved by including an appropriate impedance between the Primary and Secondary Devices so that current through the Secondary Device is limited to a safe value. This also aids in initiating the firing of the Primary Arrester.

The use of a resistor to limit the Secondary Device current is satisfactory only if the line is not carrying much current; otherwise the voltage drop across the resistor is too large. Fortunately, most lightning surges can be divided into two categories: (1) peak current of thousands of amperes with rise time faster than 1,000 amperes per microsecond; and (2) very slow rising surges with peak currents less than 100 amperes. This, then, permits the use of a small inductor in place of a resistor. Diagram B shows this configuration.

FEATURES/BENEFITS

- Complete packages available — no additional equipment needed, just connect wiring.
- Solid State Suppressors match protection levels as required by soild state equipment.
- Secondary Suppressors matched to USG-A Arresters create a long-lasting, rugged system.
- Custom units are available for special applications.

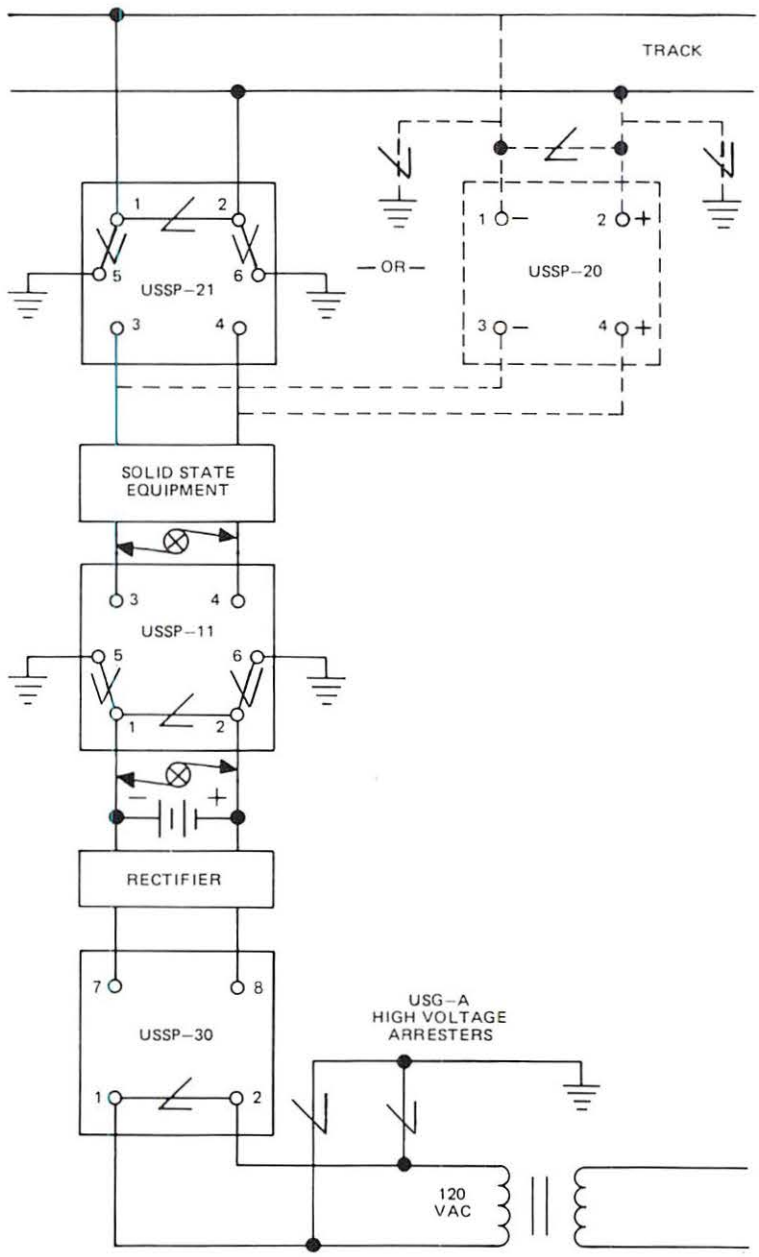

DIAGRAM C — TYPICAL SYSTEM APPLICATION

ORDERING INFORMATION

A variety of surge suppressor options are provided to meet customer requisites. Order the surge suppressor unit with a USGA Lightning Arrester attached, or if you have available stock, order without the arrester. For new installations, or installations where one compact, easy to install unit is required, order the complete Lightning Surge Suppression package. This package has all the lightning arresters mounted and internally wired for quick, easy installation. This package will save space and aid in lowering installation costs. For specific recommended applications, consult your nearest Union Switch & Signal representative. For direct replacement of units of another manufacturer, refer to chart on page 4.

ORDER BY PART NUMBER AND DESIGNATION

BATTERY LINE SURGE SUPPRESSORS — USSP 10 AND USSP 11

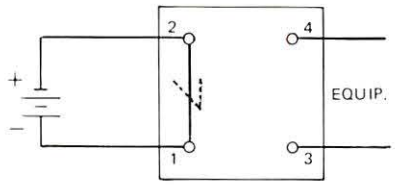

USSP-10

USSP-10 Battery Line Surge Suppressors, WITH USG-A Low Voltage Arrester mounted line-to-line.

PART NO.	MAX. CIRCUITS	PART NO.	MAX.CIRCUITS
N451552-0505	18VDC/3A	N451552-0517	32VDC/3A
N451552-0506	18VDC/7A	N451552-0518	32VDC/7A
N451552-0507	18VDC/15A	N451552-0519	32VDC/15A
N451552-0508	18VDC/25A	N451552-0520	32VDC/25A

USSP-10 Battery Line Surge Suppressors WITHOUT Mounted Arrester.

PART NO.	MAX. CIRCUITS	PART NO.	MAX.CIRCUITS
N451552-0509	18VDC/3A	N451552-0521	32VDC/3A
N451552-0510	18VDC/7A	N451552-0522	32VDC/7A
N451552-0511	18VDC/15A	N451552-0523	32VDC/15A
N451552-0512	18VDC/25A	N451552-0524	32VDC/25A

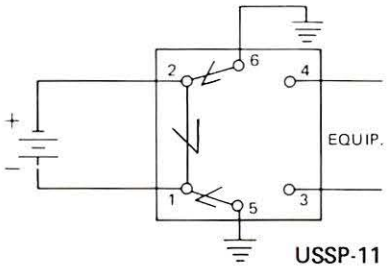

USSP-11

COMPLETE LIGHTNING SUPPRESSION PACKAGE:

USSP-11 Battery Line Surge Suppressors WITH USG-A Low Voltage Arrester mounted line-to-line and two USG-A High Voltage Arresters mounted line-to-ground.

PART NO.	MAX. CIRCUITS	PART NO.	MAX.CIRCUITS
N451552-0501	18VDC/3A	N451552-0513	32VDC/3A
N451552-0502	18VDC/7A	N451552-0514	32VDC/7A
N451552-0503	18VDC/15A	N451552-0515	32VDC/15A
N451552-0504	18VDC/25A	N451552-0516	32VDC/25A

TRACK CIRCUIT SUPPRESSORS — USSP 20 AND USSP 21

USSP-20 Track Circuit Surge Suppressor WITH USG-A Low Voltage Arrester mounted line-to-line.

PART NO.	MAX. CIRCUITS
N451552-0526	17VAC, 7VDC/50A

USSP-20 Track Circuit Surge Suppressor WITHOUT mounted Arrester.

PART NO.	MAX. CIRCUITS
N451552-0527	17VAC, 7VDC/50A

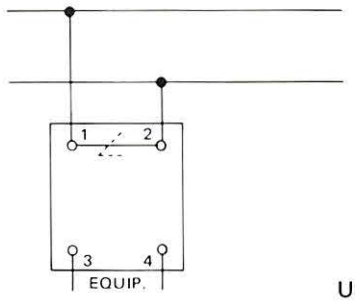

USSP-20

COMPLETE LIGHTNING SUPPRESSION PACKAGE

USSP-21 Track Circuit Surge Suppressor WITH USG-A Low Voltage Arrester mounted line-to-line and two USG-A High Voltage Arresters mounted line-to-ground.

PART NO.	MAX. CIRCUITS
N451552-0525	17VAC, 7VDC/50A

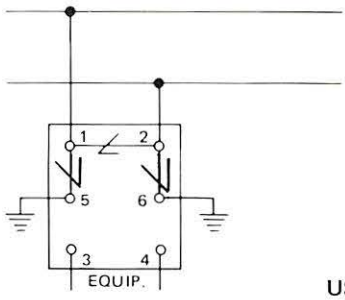

USSP-21

AC LINE SURGE SUPPRESSORS — USSP 30 AND USSP 31

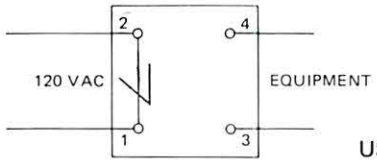

USSP-30

USSP-30 AC Line Surge Suppressor WITH USG-A AC Line Arrester mounted line-to-line.

PART NO.	MAX. CIRCUITS
N451552-0528	120VAC/20A

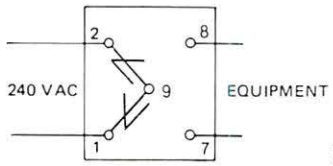

USSP-31

USSP-31 AC Line Surge Suppressor WITH USG-A AC Line Arrester mounted line-to-line.

PART NO.	MAX. CIRCUITS
N451552-0529	240VAC/20A

EQUIVALENCY CHART FOR SECONDARY SURGE SUPPRESSORS

RATING*		U S & S		REPLACES SAFETRAN TYPE
VOLTS	AMPS**	TYPE	PART NO.	
BATTERY LINE APPLICATION				
18VDC	3	USSP-11	N451552-0501	
18VDC	7	USSP-11	N451552-0502	
18VDC	15	USSP-11	N451552-0503	
18VDC	25	USSP-11	N451552-0504	
18VDC	3	USSP-10	N451552-0505	SP17-2A
18VDC	7	USSP-10	N451552-0506	SP18-2A
18VDC	15	USSP-10	N451552-0507	SP19-2A
18VDC	25	USSP-10	N451552-0508	SP24-2A
18VDC	3	USSP-10	N451552-0509	SP17-1A
18VDC	7	USSP-10	N451552-0510	SP18-1A
18VDC	15	USSP-10	N451552-0511	SP19-1A
18VDC	25	USSP-10	N451552-0512	SP24-1A
32VDC	3	USSP-11	N451552-0513	
32VDC	7	USSP-11	N451552-0514	
32VDC	15	USSP-11	N451552-0515	
32VDC	25	USSP-11	N451552-0516	
32VDC	3	USSP-10	N451552-0517	SP17-2B
32VDC	7	USSP-10	N451552-0518	SP18-2B
32VDC	15	USSP-10	N451552-0519	SP19-2B
32VDC	25	USSP-10	N451552-0520	SP24-2B
32VDC	3	USSP-10	N451552-0521	SP17-1B
32VDC	7	USSP-10	N451552-0522	SP18-1B
32VDC	15	USSP-10	N451552-0523	SP19-1B
32VDC	25	USSP-10	N451552-0524	SP24-1B
TRACK CIRCUIT APPLICATION				
17VAC, 7VDC	50	USSP-21	N451552-0525	
17VAC, 7VDC	50	USSP-20	N451552-0526	SP26-6
17VAC, 7VDC	50	USSP-20	N451552-0527	SP26-2/SP27-2
AC LINE APPLICATION				
120VAC	20	USSP-30	N451552-0528	SP20-2A
240VAC	20	USSP-31	N451552-0529	SP20-3A

* Rating applies only to U S & S Secondary Surge Suppressors
** Maximum circuit current

NOTE: For detail parts and additional information, refer to service manual SM6145.

LAMPS FOR SIGNAL LIGHT APPLICATIONS

DESCRIPTION

U S & S provides a complete line of incandescent lamps, including quartz-iodine lamps, for signal light applications. The lamps covered in this catalog section are built to precise specifications and cover those lamps required for use in the precisely focused optical systems of signal units. There are a number of filament, base, and bulb shape combinations available to meet most signal requirements.

LAMP BASES

The three types of Lamp Bases are: bayonet base, rebased, and screw base. Bayonet base and rebased lamps contain precisely formed filaments which are accurately located to the base, to assure that the filament is brought to the exact focal point of the lens system. Screw base lamps are not of the precision type and are used in short range signals and marker lights.

The bayonet base lamp contains a bulb and filament unit with a two-pin base precisely attached to light center length and axial alignment. The rebased lamp is basically the same with a bayonet-type base without pins to which a rebasing sleeve is precisely attached. The screw base lamp contains a bulb and filament to which a screw base is attached.

The lamp base contact arrangements are single contact (SC) and double contact (DC). On the single contact unit, connections are made to the base and single contact. For the double contact unit, connections are made to each of the contacts, which is independent of the base.

LAMP FILAMENTS

There are single and double filament lamps. The life of the single filament lamp depends on the voltage applied. It should be replaced after burning the recommended number of hours.

The double filament lamps have two filaments. If one filament burns out, the bulb will remain lit for a period of time. Periodic inspections should be made of these units to replace lamps which are operating on a single filament.

"Special" double filament lamps are available in which the main filament has a normal life, while the secondary filament is designed for a much longer life. If the main filament burns out, the secondary filament produces a reduced indication because of its low wattage and low candle power. Lamp replacement would be obvious.

TYPICAL FILAMENT SYMBOLS

The filament symbol indicates the filament arrangement and the lettering indicates (S) straight, (C) coiled, (CC) coiled coil, (R) rounded, and (V) V-shaped. The number after the hyphen indicates filament arrangement. A number before the first letter tells the number of filaments in multiple.

BULB SHAPES

The style letter indicates the shape of the bulb, while the number following the letter indicates the diameter of the bulb in eighths of an inch. Therefore, a Style S-11 indicates a Style S shape bulb with a diameter of 11/8" (or 1 3/8".) The shape and size of Style A is determined in the same manner.

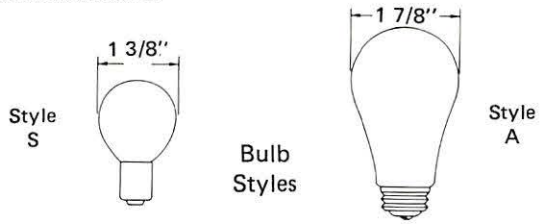

ORDERING INFORMATION

Lamp ordering tables are arranged by application. The LCL (light center length) shown in the tabulation accurately locates the filament center with regard to the base. This ensures that the lamp can be replaced in the precisely located socket of the signal units without affecting the light intensity or focus. The LCL represents the distance from the center of the light source to the top of the pins on the bayonet and rebased type. On the screw type, the LCL represents the distance from the center of the light to the bottom of the base contact (excluding solder).

PART NUMBER	AAR ITEM NO.	VOLTS	AMPS/ WATTS/CP	BULB STYLE	LIGHT CENTER LENGTH(CLC)	BASE	FILAMENT TYPE	LIFE HOURS
COLOR LIGHT SIGNAL (CLT)								
J071601	10	10	10W	A-15	2-7/32	2-PS*	C-2V	1500
J714165	95	10	18W	A-15	2-7/32	2-PS*	CC-6	1500
J714166	96	10	18W+3.5W	A-15	2-7/32	2-PS*	MF:CC-6 SF:CC-6	1500
J714168	98	10	11W	S-11	1-1/4	SCBC	CC-6	1000
J071463	88	10	18W	S-11	1-1/4	SCBC	C-2V	1000
J071656	67	10	13W+3.5W	S-11	1-1/4	SC	MF:C-2V SF:C-12	1000
J071574	100	10	25W	S-11	1-1/4	SCBC	CC-6	1000
J071613	72	11	11W	S-11	1-1/4	SCBC	C-2V	2500
LEVER LIGHT (LL)								
J071685	49	120	10W	S-11 (Type-B Vacuum)	1-1/4	SC	C-7A	1500
SWITCH LAMP (SL)								
J071525	47	13.5	0.25A	S-8 (Type-B Vacuum)	1-1/4	SC	C-2R	1000
SEARCHLIGHT SIGNAL (SLT)								
J714168	98	10	11W	S-11	1-1/4	SC	CC-6	1000
J071656	67	10	13W+3.5W	S-11	1-1/4	SC	MF:C-2V SF:C-12	1000
J071463	88	10	18W	S-11	1-1/4	SC	C-2V	1000
J071574	100	10	25W	S-11	1-1/4	SC	CC-6	1000
J071627	65	10	10W	S-11	1-1/4	SCBC	C-2V	1000
J071613	72	11	11W	S-11	1-1/4	SC	C-2V	2500
CROSSING GATE ARM (CGA)								
J017463	88	10	18W	S-11	1-1/4	SC	C-2V	1000
J071613	72	11	11W	S-11	1-1/4	SC	C-2V	2500
HIGHWAY CROSSING SIGNAL (XNG)								
J071463	88	10	18W	S-11	1-1/4	SC	C-2V	1000
J071574	100	10	25W	S-11	1-1/4	SC	CC-6	1000
J714283	104	10	16W	Q1	1-1/4	SC	C-6	2500
J714284		10	36W	Q1				
J714054	35	125	25W	G-16½	1-1/4	SC	C-5	1000
POSITION LIGHT SIGNAL (PLT)								
J071463	88	10	18W	S-11	1-1/4	SC	C-2V	1000
SEMAPHORE SIGNAL (SEM)								
J071656	67	10	13W+3.5W	S-11	1-1/4	SCBC	MF:C-2V SF:C-12	1000
J071525	47	13.5	0.25A	S-8 (Type-B Vacuum)	1-1/4	SC	C-2R	1000
J071685	49	120	10W	S-11 (Type-B Vacuum)	1-1/4	SC	C-7A	1500

*2-PS indicates 2 pin rebased sleeve, lamp

5-SECOND TIMER

Union Switch & Signal offers a microprocessor-based timer to replace electro-mechanical time element relays. The 5-Second Timer is designed to transfer an input voltage to an external device five seconds after the input is received. This timer is particularly useful in railroad vital timing applications such as short track circuits and busy interlockings where timing of controls is especially critical.

DESCRIPTION

The 5-Second Timer is housed in a compact, anodized aluminum case, and is equipped with a lead wire seal to limit maintenance access. It is easily mounted and replaced by just one person, and requires a minimum of wiring connections. The unit occupies about the same space as a US&S PN-150 series relay. Brackets are available for mounting the unit in a US&S or GRS relay rack frame.

Input and output connection points (i.e. track and repeater relay) are provided on the rear of the unit, with a choice of screw or quick-disconnect terminals. Operating power is typically obtained through a front contact of a track relay. The unit can be operated over an 8 to 24 Vdc input voltage range. A front panel LED indicates the unit's operating status.

The timer's electronic circuitry is contained on a single printed circuit board inside the unit. Major components include a microprocessor with programmed memory (PROM), two time sources, a tuned circuit filter, power output stage and a regulated power supply for the processor and related circuitry. No field adjustments are required on these circuits.

APPLICATION NOTES

FRA regulations require loss of shunt protection in route locking. The 5-Second Timer can be used to satisfy these regulations by delaying the pick-up of a track repeater relay five seconds after the pick-up of the track relay. This delay helps verify that a train has left the applicable track circuit and has not temporarily lost shunt due to rusty rail or other adverse track conditions. A typical loss-of-shunt application is shown below.

The high output drive capacity of the 5-Second Timer enables driving of a 125 ohm minimum load. In turn, this allows control of a wide variety of relays.

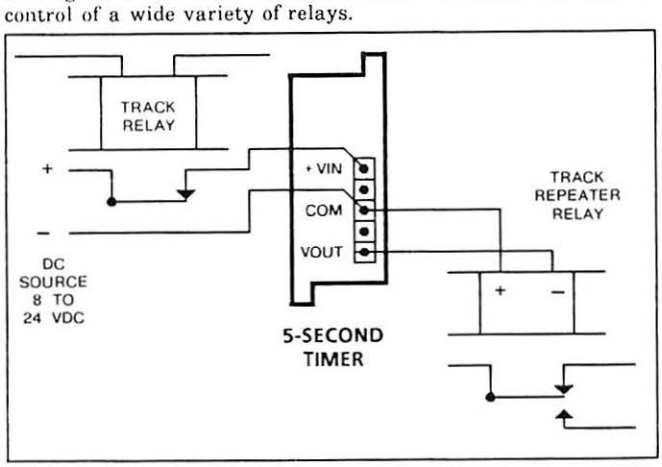

FEATURES

- Utilizes fail-safe hardware and software design principles to prevent premature timing out.
- Unit's microprocessor constantly performs self diagnostics.
- Operates over a wide range of input voltages: 8 to 24 Vdc
- High output drive capacity enables driving of 125 ohm minimum load; allows control of a variety of relays.
- Brackets available for easy mounting in US&S or GRS relay frame.
- Housing design allows mounting by one person.
- No field adjustments required.
- Compact unit occupies same space as a US&S PN-150 series relay.
- Replaces old style electro-mechanical time-element relays.

HOW TO ORDER

Order the basic 5-Second Timer from the tabulation below. Note that the timer can also be ordered as part of a kit containing a US&S PN-compatible or GRS-compatible rack mounting bracket and all required hardware.

PART NO.	DESCRIPTION
N451774-0101	5-Seond Timer Unit
N451774-0102	Kit: Timer, US&S PN-style rack mounting bracket, mounting hardware.
N451774-0103	Kit: Timer, GRS style rack mounting bracket, mounting hardware.
J451775-0201	US&S PN-style relay rack mounting bracket
J451775-0102	GRS style relay rack mounting bracket

COPYRIGHT 1988, UNION SWITCH & SIGNAL INC.

TERMINAL BLOCKS, INSULATED MOLDED CAPS, FUSES, FUSE BLOCKS AND RESISTORS

STYLE K-10 MULTIPLE TERMINAL BLOCKS (12-WAY)

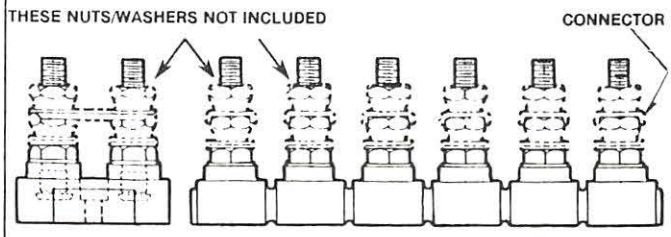

MOUNTING CENTERS (BETWEEN EACH PAIR OF TERMINALS) = 1"

PART NO.	DESCRIPTION
N178389	Terminal Block, 12-Way, with Connector
N178390	Terminal Block, 12-Way, without Connector

STYLE K-40 MULTIPLE TERMINAL BLOCKS (3, 4, 5, 6, 8, 9, and 12-WAY)

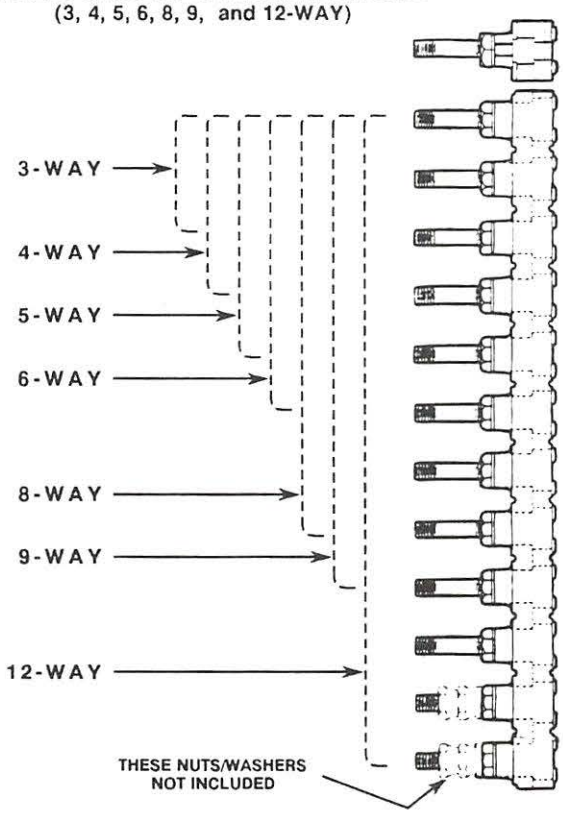

MOUNTING CENTERS (BETWEEN EACH PAIR OF TERMINALS) = 1"

PART NO.	DESCRIPTION	PART NO.	DESCRIPTION
N223598	Term. Bl., 3-Way	N250480	Term. Bl., 8-Way
N107472	Term. Bl., 4-Way	N226805	Term. Bl., 9-Way
N223597	Term. Bl., 5-Way	N106937	Term. Bl., 12-Way
N226857	Term. Bl., 6-Way		

INSULATED MOLDED CAPS

PART NO.	DESCRIPTION
J078169	Insulated Molded Cap, with Molded-In Brass Insert
J078147	Insulated Molded Cap, without Brass Insert

FUSES

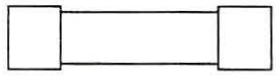

PART NO.	DESCRIPTION
J071008	Fuse. 5 A, 250 V
J071117	Fuse, 6 A, 250 V
J071013	Fuse, 10 A, 250 V
J071107	Fuse, 20 A, 250 V
J071127	Fuse, 30 A, 250 V
J710069	Fuse, 20 A, 600 V
J071198	Fuse, 30 A, 600 V

4 INCH TERMINAL BLOCK AND FUSE HOLDER FOR 250 V FUSES

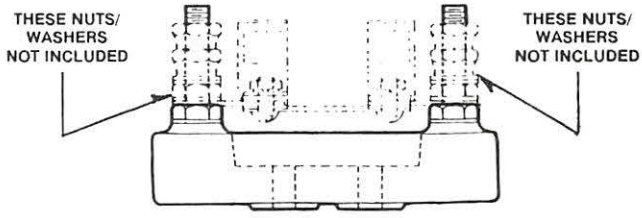

MOUNTING CENTERS = 1"

PART NO.	DESCRIPTION
N238637	4" Fuse Block Holder for 250 V Fuses

7 INCH TERMINAL BLOCK AND FUSE HOLDER FOR 600 V FUSES

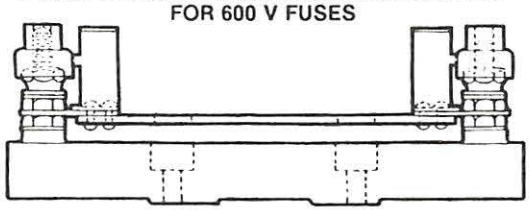

MOUNTING CENTERS = 2-1/2"

PART NO.	DESCRIPTION
X277083-001	7" Fuse Block Holder for 600 V Fuses

COPYRIGHT 1988, UNION SWITCH & SIGNAL INC.

ADJUSTABLE RESISTORS

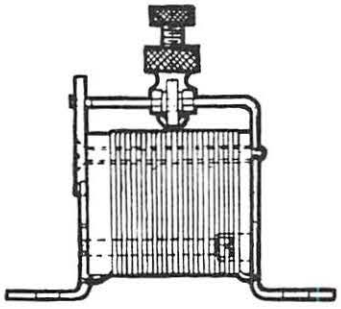

MOUNTING CENTERS = 2-1/4"

PART NO.	AMPS CAP.	MAX. RES. (OHMS)	MIN. RES. (OHMS)	ADJ. IN STEPS (OHMS)
N144909	1.7	2.0	0.04	0.08
N144910	1.1	5.0	0.10	0.2
N147721	0.49	25.0	0.45	0.9
N149880	0.75	10.0	0.19	0.38
N150318	2.5	1.0	0.04	0.08
N187853	4.5	0.3	0.012	0.024
N210952	0.35	50.0	1.0	2.0
N438937	2.5	2.4	0.5	0.1

ADJUSTABLE RESISTORS ON TERMINAL BLOCK

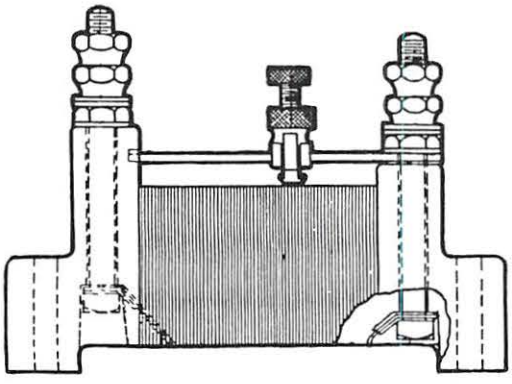

MOUNTING CENTERS = 4-1/4"

PART NO.	AMPS CAP.	MAX. RES. (OHMS)	MIN. RES. (OHMS)	ADJ. IN STEPS (OHMS)
N156681	3.3	1.2	0.05	0.055
N156682	2.3	2.5	0.30	0.10
N156683	1.7	4.5	0.3	0.09
N156684	1.0	12.0	0.7	0.25
N156685	0.6	30.0	4.0	0.6
N156686	0.47	53.0	7.0	1.0
N156687	0.38	85.0	7.0	1.7
N156688	0.34	105.0	13.0	2.0
N161444	0.86	16.0	1.0	0.32
N186438	2.0	3.5	0.24	0.07
N197139	6.3	0.3	0.025	0.014
N212815	4.5	0.6	0.041	0.027
N214995	1.1	9.0	0.6	0.18
N215747	0.77	20.0	1.2	0.4
N282172	2.5	1.8	0.21	0.07
N284580	7.7	0.2	0.015	0.009
N288751	1.8	3.7	0.54	0.07
N438421	--	0.066	0.054	--

STYLE SRA TRACK CIRCUIT POWER RESISTORS SINGLE RESISTOR TYPE

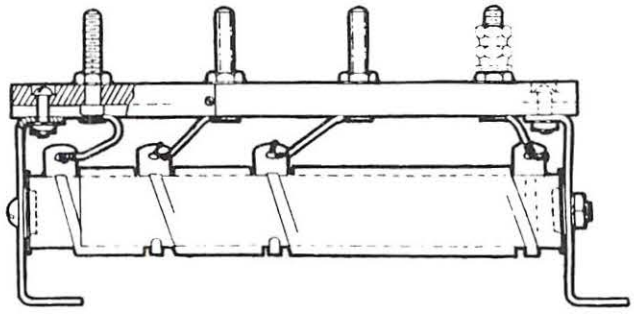

MOUNTING CENTERS = 8-51/64"

PART NO.	RATING @ TOTAL RES.		US&S POWER RATING (WATTS)
	RESISTANCE (OHMS)	CURRENT (AMPS)	
N451140-0101	1.5	10.0	150.0
N451140-0102	5.0	4.0	80.0

STYLE SRA TRACK CIRCUIT POWER RESISTOR DUAL-RESISTOR TYPE (TWO IN PARALLEL)

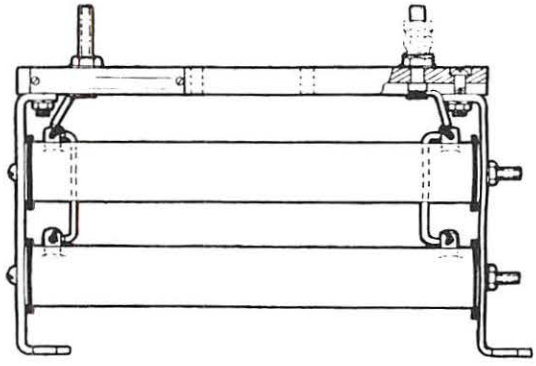

MOUNTING CENTERS = 8-51/64"

PART NO.	RATING @ TOTAL RES.		US&S POWER RATING (WATTS)
	RESISTANCE (OHMS)	CURRENT (AMPS)	
N451140-0104	50.0	1.75	150.0

TERMINAL BLOCKS, INSULATED MOLDED CAPS, FUSES, FUSE BLOCKS AND RESISTORS

STYLE K-10 MULTIPLE TERMINAL BLOCKS (12-WAY)

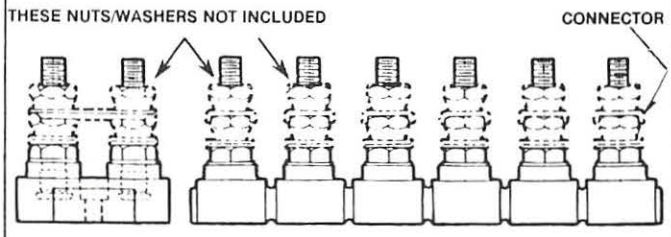

MOUNTING CENTERS (BETWEEN EACH PAIR OF TERMINALS) = 1"

PART NO.	DESCRIPTION
N178389	Terminal Block, 12-Way, with Connector
N178390	Terminal Block, 12-Way, without Connector

STYLE K-40 MULTIPLE TERMINAL BLOCKS (3, 4, 5, 6, 8, 9, and 12-WAY)

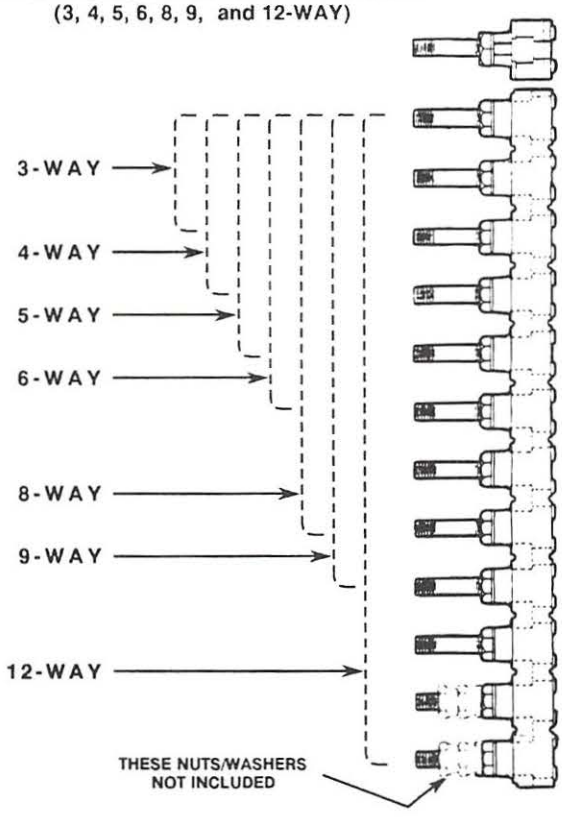

MOUNTING CENTERS (BETWEEN EACH PAIR OF TERMINALS) = 1"

PART NO.	DESCRIPTION	PART NO.	DESCRIPTION
N223598	Term. Bl., 3-Way	N250480	Term. Bl., 8-Way
N107472	Term. Bl., 4-Way	N226805	Term. Bl., 9-Way
N223597	Term. Bl., 5-Way	N106937	Term. Bl., 12-Way
N226857	Term. Bl., 6-Way		

INSULATED MOLDED CAPS

PART NO.	DESCRIPTION
J078169	Insulated Molded Cap, with Molded-In Brass Insert
J078147	Insulated Molded Cap, without Brass Insert

FUSES

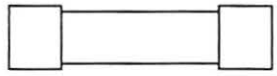

PART NO.	DESCRIPTION
J071008	Fuse. 5 A, 250 V
J071117	Fuse, 6 A, 250 V
J071013	Fuse, 10 A, 250 V
J071107	Fuse, 20 A, 250 V
J071127	Fuse, 30 A, 250 V
J710069	Fuse, 20 A, 600 V
J071198	Fuse, 30 A, 600 V

4 INCH TERMINAL BLOCK AND FUSE HOLDER FOR 250 V FUSES

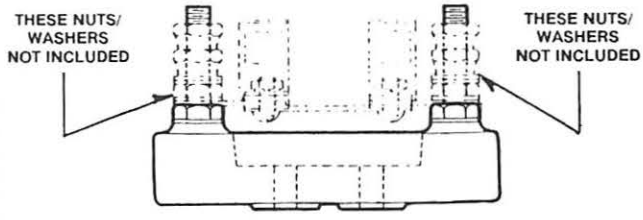

MOUNTING CENTERS = 1"

PART NO.	DESCRIPTION
N238637	4" Fuse Block Holder for 250 V Fuses

7 INCH TERMINAL BLOCK AND FUSE HOLDER FOR 600 V FUSES

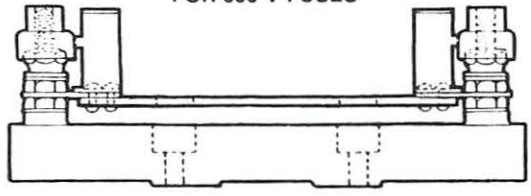

MOUNTING CENTERS = 2-1/2"

PART NO.	DESCRIPTION
X277083-001	7" Fuse Block Holder for 600 V Fuses

COPYRIGHT 1988, UNION SWITCH & SIGNAL INC.

ADJUSTABLE RESISTORS

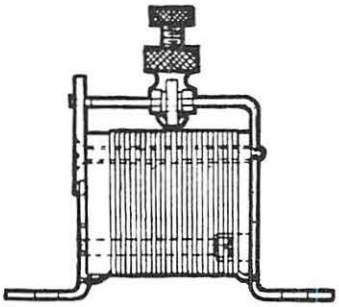

MOUNTING CENTERS = 2-1/4"

PART NO.	AMPS CAP.	MAX. RES. (OHMS)	MIN. RES. (OHMS)	ADJ. IN STEPS (OHMS)
N144909	1.7	2.0	0.04	0.08
N144910	1.1	5.0	0.10	0.2
N147721	0.49	25.0	0.45	0.9
N149880	0.75	10.0	0.19	0.38
N150318	2.5	1.0	0.04	0.08
N187853	4.5	0.3	0.012	0.024
N210952	0.35	50.0	1.0	2.0
N438937	2.5	2.4	0.5	0.1

ADJUSTABLE RESISTORS ON TERMINAL BLOCK

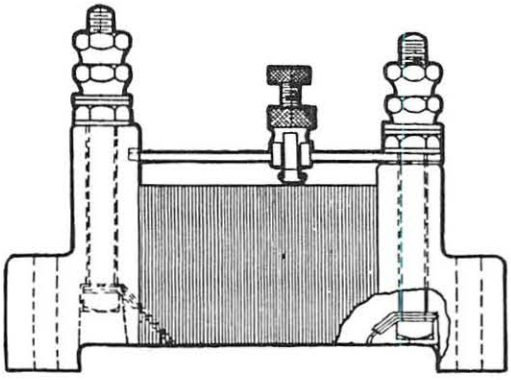

MOUNTING CENTERS = 4-1/4"

PART NO.	AMPS CAP.	MAX. RES. (OHMS)	MIN. RES. (OHMS)	ADJ. IN STEPS (OHMS)
N156681	3.3	1.2	0.05	0.055
N156682	2.3	2.5	0.30	0.10
N156683	1.7	4.5	0.3	0.09
N156684	1.0	12.0	0.7	0.25
N156685	0.6	30.0	4.0	0.6
N156686	0.47	53.0	7.0	1.0
N156687	0.38	85.0	7.0	1.7
N156688	0.34	105.0	13.0	2.0
N161444	0.86	16.0	1.0	0.32
N186438	2.0	3.5	0.24	0.07
N197139	6.3	0.3	0.025	0.014
N212815	4.5	0.6	0.041	0.027
N214995	1.1	9.0	0.6	0.18
N215747	0.77	20.0	1.2	0.4
N282172	2.5	1.8	0.21	0.07
N284580	7.7	0.2	0.015	0.009
N288751	1.8	3.7	0.54	0.07
N438421	--	0.066	0.054	--

STYLE SRA TRACK CIRCUIT POWER RESISTORS SINGLE RESISTOR TYPE

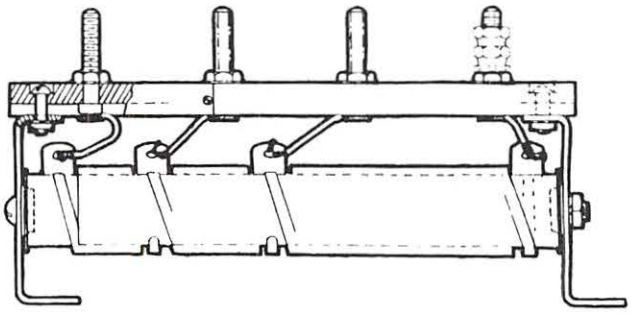

MOUNTING CENTERS = 8-51/64"

PART NO.	RATING @ TOTAL RES.		US&S POWER RATING (WATTS)
	RESISTANCE (OHMS)	CURRENT (AMPS)	
N451140-0101	1.5	10.0	150.0
N451140-0102	5.0	4.0	80.0

STYLE SRA TRACK CIRCUIT POWER RESISTOR DUAL-RESISTOR TYPE (TWO IN PARALLEL)

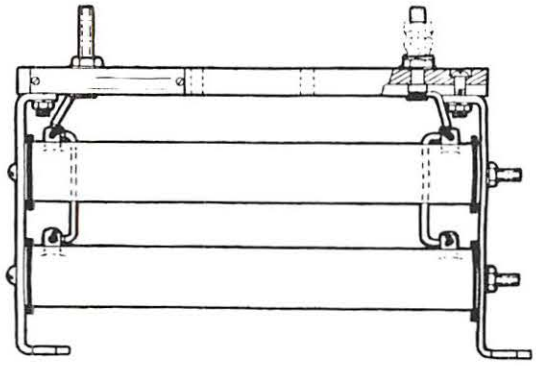

MOUNTING CENTERS = 8-51/64"

PART NO.	RATING @ TOTAL RES.		US&S POWER RATING (WATTS)
	RESISTANCE (OHMS)	CURRENT (AMPS)	
N451140-0104	50.0	1.75	150.0

TOOLS

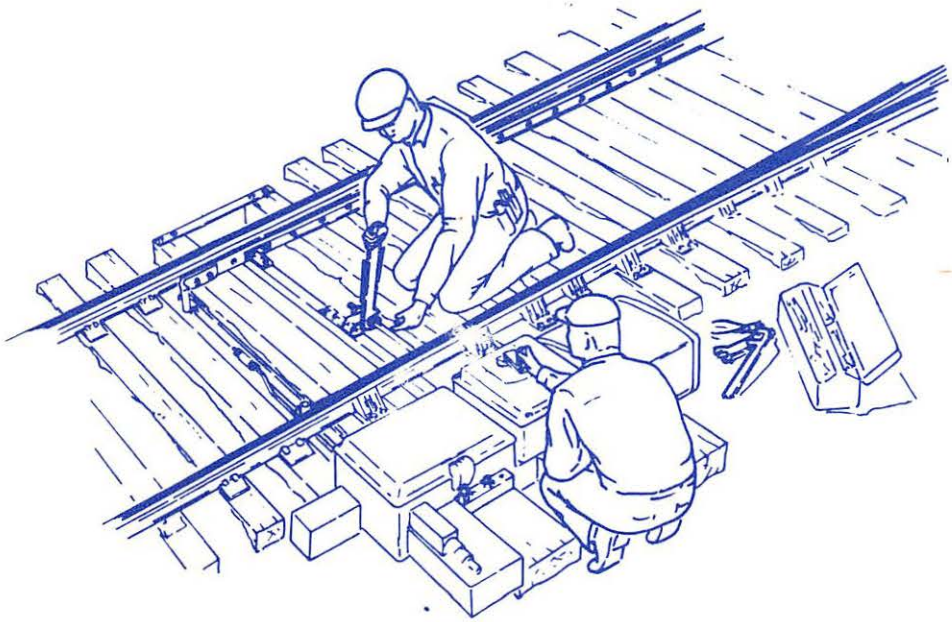

RSE-18

TOOLS

MAINTENANCE TOOLS

For Plug-In Relays PN-150 and PN-250 ..... RSE-18A1

MAINTENANCE TOOLS FOR PLUG-IN RELAYS PN-150 AND PN-250

This catalog section covers special tools designed and manufactured by US&S which are required for adjusting contacts on PN-150 and PN-250 Relays.

CONTACT ADJUSTMENT TOOLS

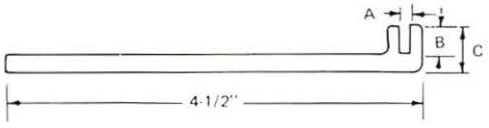

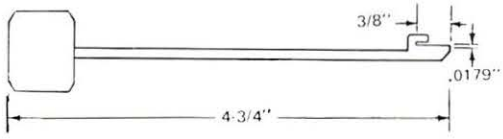

PART NO.	DIMENSIONS		
	A	B	C
M102228	7/64"	5/16"	1/2"
M301972	3/32"	5/16"	1/2"
M301973	9/64"	5/16"	1/2"
M451151-0701	1/8"	3/8"	9/16"

PART NO.	M451151-0801

HORIZONTAL ADJUSMENT TOOLS

FRONTS AND BACKS

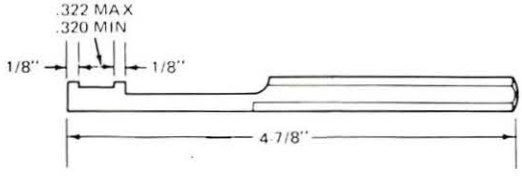

PART NO.	M330458

HEELS

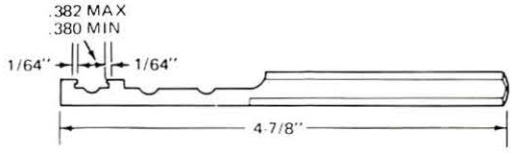

PART NO.	M330459

COMBINATION CONTACT ADJUSTMENT TOOL

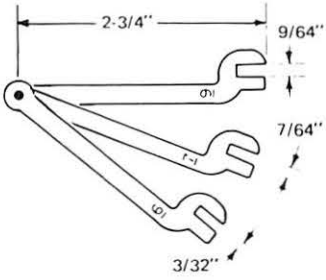

PART NO.	M102225